Comparison of methods to measure torsional vibration

Jonas Holm

Bachelor´s thesis

Electrical Engineering

Vaasa 2014

BACHELOR'S THESIS

Author:	Jonas Holm
Degree programme:	Electrical Engineering, Vaasa
Specialization:	Automation
Supervisor:	Mats Braskén

Title: *Comparison of methods to measure torsional vibration*

Date: 23.4.2014 Number of pages: 37 Appendices: 8

Abstract

This Bachelor´s thesis was done for Wärtsilä Finland engine laboratory in Vaasa during the winter 2013–2014. The task was to compare two different measurement methods for measuring torsional vibration of a cam-shaft. The first method is based on strain gages that measure the torque in the shaft, this technique is currently used in Wärtsilä laboratory. The second method uses encoders and magnetic belts to measure the angle of rotation of the shaft.

The goal with this thesis is to find out if the second method can be used to measure torsional vibration of a shaft and can be comparable to the first method. At the end of this thesis a comparison and the results of these two measurement methods that have been tested on an engine are presented.

Language: English

Key words: torsional vibration, strain gage, encoders, dewesoft, cam-shaft

---

EXAMENSARBETE

Författare:	Jonas Holm
Utbildningsprogram och ort:	Elektroteknik, Vasa
Fördjupning:	Automation
Handledare:	Mats Braskén

Titel: *Jämförelse av metoder för att mäta torsionsvibrationer*

Datum: 23.4.2014 Sidantal: 37 Bilagor: 8

Abstrakt

Detta ingenjörsarbete är gjort för Wärtsilä Finlands motorlaboratorium i Vasa under vintern 2013–2014. Uppgiften med detta arbete var att jämföra två olika mätmetoder för att mäta torsionsvibrationer i en kamaxel. Den första metoden är baserad på töjningsgivare som mäter momentet i axeln. Denna teknik används i nuläget inom Wärtsilä laboratoriet. I den andra metoden används pulsgivare och magnetband för att mäta vridvinkeln i axeln.

Målet med detta arbete är att ta reda på om den andra metoden kan användas för att mäta torsionsvibrationer i en axel och vara jämförbar med den första metoden. I slutet av examensarbetet presenteras en jämförelse och resultat av dessa två mätmetoder som har blivit testade på en motor.

Språk: Engelska

Nyckelord: torsionsvibrationer, töjningsgivare, pulsgivare, dewesoft, kamaxel

---

OPINNÄYTETYÖ

Tekijä:	Jonas Holm
Koulutusohjelma ja paikkakunta:	Elektrotekniikka,Vaasa
Syventävät opinnot:	Automatiikka
Ohjaaja:	Mats Braskèn

Nimike: *Vääntövärähtelyn mittaustapojen vertailu*

Päivämäärä: 23.4.2014 Sivumäärä: 37 Liitteet: 8

Tiivistelmä

Tämä opinnäytetyö on tehty Wärtsilä Finland moottorilaboratoriolle Vaasassa talvena 2013–2014. Tehtävä tässä työssä oli vertailla kahta eri mittausmenetelmää nokka-akselin vääntövärähtelyn mittaamiseen. Ensimmäinen menetelmä perustuu venymäliuskalle, jolla mitataan akselin vääntömomenttia, tätä tekniikkaa käytetään tällä hetkellä Wärtsilän laboratoriossa. Toisessa menetelmässä käytetään enkoodereita ja magneettinauhoja akselin kiertokulman mittaamiseksi.

Tavoitteena työssä on selvittää, jos toista menetelmää voidaan käyttää mittaamaan vääntövärähtelyä akselissa ja on verrattavissa ensimmäiseen menetelmään. Lopussa työssä on vertailu ja tulokset näistä kahdesta mittausmenetelmästä, jotka on testattu moottorilla.

Kieli: englanti

Avainsanat: vääntövärähtelyt, venymäliuska, enkooderit, dewesoft, nokka-akseli

---

Contents

ABBREVIATIONS

Ca	= Combustion analysis
DAQ	= Data Acquisition
deg	= Degrees
FFT	= Fast Fourier transform
GUM	= Guide to the expression of uncertainty in measurement
I&M	= Instrumentation and measurement
kNm	= Kilonewton meter
PT&V	= Performance, testing & validation
R&D	= Research and development
RPM	= Revolutions per minute
RV	= Rotational vibration
TV	= Torsional vibration

Preamble

I want to thank all the personnel at Wärtsilä laboratory that have been involved in this thesis work for the support and help. A special thanks to my supervisor Tomi Riiki at Wärtsilä and Mats Braskén at Novia University of Applied Sciences.

23.4.2014

Jonas Holm

1 Introduction

1.1 Company

Wärtsilä Oyj is a Finnish engine manufacturing company that provides power solutions and services to the marine and energy markets worldwide. The headquarter is located in Helsinki and Wärtsilä employs 18,900 workers in more than 70 countries at the end of 2012. Today Björn Rosengren is the president and CEO of Wärtsilä corporation.

Wärtsilä was established 1834 in the municipality of Tohmajärvi eastern in Finland as a sawmill. In 1938 they took the step into diesel engines when they signed a license agreement with Friedrich Krupp Germania Werft AG. The first diesel engine was manufactured 1942 in Turku, Finland. In 1936 Wärtsilä acquired the “Onkilahti Engineering” workshop in Vaasa. [1] [2]

Wärtsilä has three business areas, Ship power, Power plants and Services. The R&D (Research and development) department, which belongs under Ship power, is continually trying to improve the company´s leadership position with new engines and technologies. In the R&D organization there is a department called PT&V (Performance, Testing & Validation), where the main purpose is to test and validate engine concepts. The R&D department has laboratories around Europe, and one of them is located in Vaasa.

1.2 Subject of thesis

1.2.1 Background

This thesis was done for Wärtsilä Ship Power´s 4-stroke, R&D, PT&V, I&M (instrumentation & measurement) department in Vaasa. I got this thesis subject because I have been a trainee at the I&M department for two years since 2012. In the Autumn of 2013 I got the opportunity to continue and write my Bachelor's thesis for Wärtsilä.

1.2.2 Purpose

The purpose of this thesis work is to investigate and compare two different measurement methods for measuring torsional vibrations on a large, medium speed diesel engine cam-shaft.

Method 1 is today a Wärtsilä standard when measuring the torsional vibrations on a shaft. In this method, strain gages are used to measure the strain of the cam-shaft and signals are transmitted via a telemetry system to a receiver. The torque in the shaft is then calculated from the measured strain and the result is shown as a torque (in kNm (kilo Newton meter)).

Method 2 is a new method for measuring torsional vibrations and this method will be investigated in this thesis. The principle is to have a magnetic belt around the shaft at two different positions along the shaft, and encoders that will read the induced pulses that come from the belt. From these encoders it will be possible to calculate rotational vibrations and torsional vibrations in the cam-shaft. The result from this is the twist of the shaft (in deg (degrees)). In theory this method is easier to install and will have a better repeatability than the now used method one.

The uncertainty has been calculated for the two different methods according to the GUM (Guide to the expression of uncertainty in measurement) standard and at the end of the thesis the comparison between the results is presented.

1.2.3 Goal

The main reason for doing this thesis work has been to find out if Wärtsilä can save time, money and achieve a better accuracy and repeatability with the measurement method 2, when torsional measurements are required on an engine. If method 2 works well, it will

also bring more information about the cam-shaft compared to method 1, for instance the shaft speed.

2 Theory

2.1 Torsional vibration

Torsional vibrations are an oscillation of the angular motion (twist) that occurs along rotating parts (Figure 1). In general torsional vibrations occur in power transmissions, for example in crankshafts, cam-shafts, alternator shafts and gearboxes. If torsional vibrations are not controlled, they can cause damages, for example shaft breakage. [3] [4]

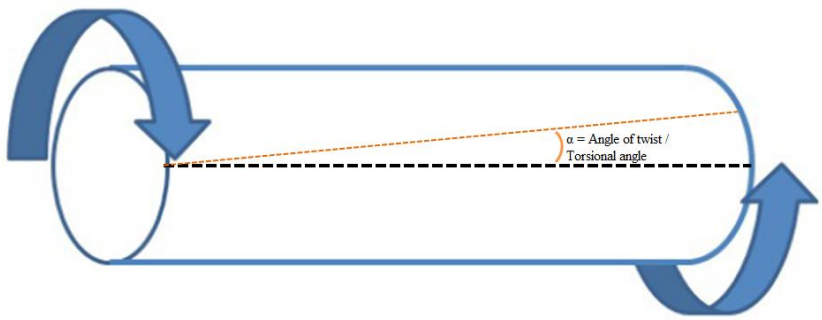

Figure 1: Basic principle of a twisted shaft [5].

There are different techniques for measuring the torsional vibration:

- Direct measurements (e.g. strain gages, linear accelerometers, dual-beam laser interferometers).
- Coder-based techniques (e.g. magnetic pick-ups, optical sensors, zebra tapes).

The output quantities can be angular position, velocity and acceleration, twist angle and twist speed and torque. The quantities depend on the measurement techniques [6]. Typical excitation sources are mass forces (e.g. oscillating and rotating masses) and gas forces (e.g. pressure in cylinder).

2.2 Rotational vibration

Rotational vibration is the dynamic deviation from the rotation speed of the shaft. Rotational vibration is measured by cutting the DC component from the rotation speed or rotation angle. When a shaft is rotating there are always deviations from the rotation speed. In some regions, depending of the rotation speed, the deviations may become too high and thereby cause problems.

Figure 2 shows an example of a rotational vibration measurement, where a shaft starts rotating from 0 RPM (revolution per minute) and speeds up to 3000 RPM and then down to 0 RPM again. The upper curve is the rotating speed [RPM] and the curve below is the deviation in degrees (rotation angle). The graph shows that on the run up and coast down of the shaft there is a high deviation of the rotation angle. The two red arrows in the graph indicate the high deviation of the rotation angle. This is because of the angular vibration crossing the angular natural frequency of the shaft, means that at this point in the RPM range the resonance of the shaft is higher than normal [5].

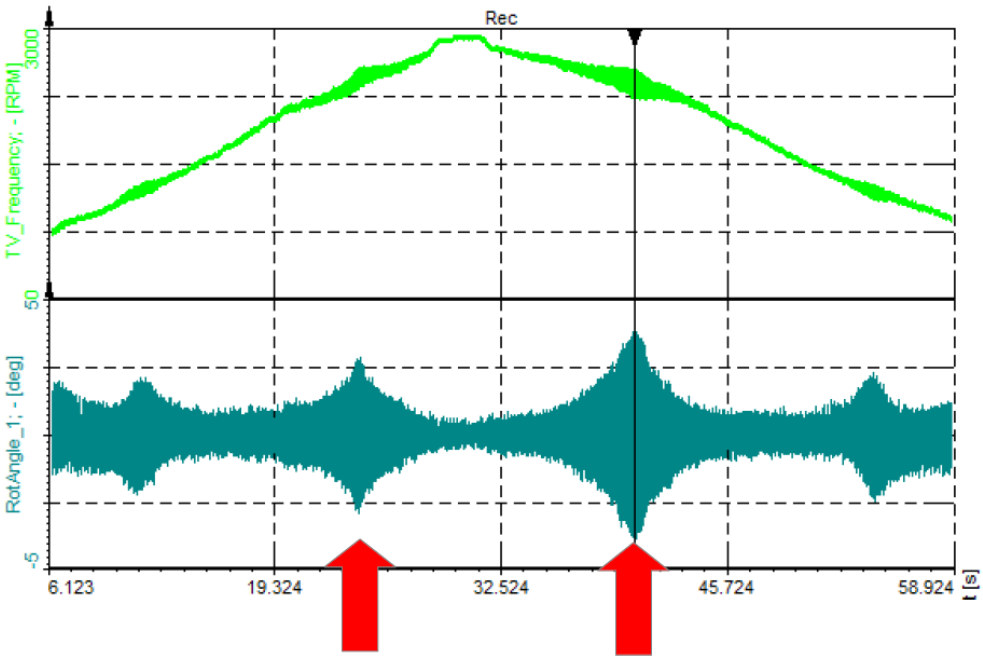

Figure 2: Example measurement of rotational vibrations [5].

2.3 Measurement method 1 – Strain Gages

2.3.1 Strain

Strain is the amount of deformation of a body due to an applied force. Usually the strain is very small and it is expressed in units of µm/m or µε. When for example a bar (Figure 3) is pulled there is a small change in the original length and diameter of the bar. The definition of the strain of the pulled bar is given in equation 1.

$$\varepsilon(strain) = \frac{\Delta L(change\ in\ length)}{L(original\ length)} \tag{1}$$

Due to the change in the length of the bar, it also gets thinner. The ratio between the lateral and longitudinal strain is called Poisson ratio. For steel this ratio is around 0.3 [7].

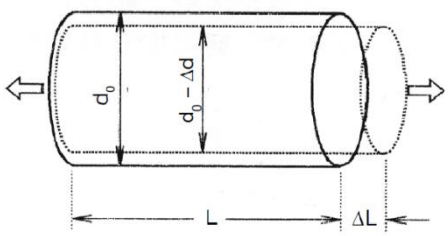

Figure 3: Example of pulled bar. ΔL/L = longitudinal strain, $\Delta d/d_0$ =lateral strain [7].

The stress in a material can be calculated from the strain. Within specific limits the deformations are directly proportional to the strain (Figure 4). If so, Hooke´s law can be used (equation 2) [7].

$$\sigma = E * \varepsilon \tag{2}$$

Where σ = stress, E = Youngs modulus (~ 206Mpa for steel) and ε = strain.

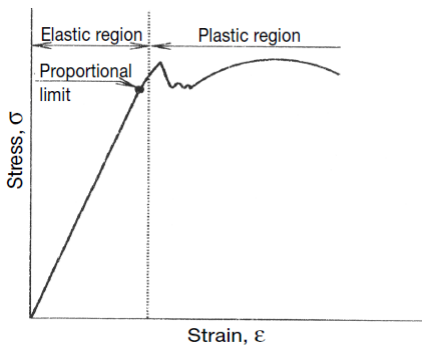

Figure 4: Stress versus strain relation where the slope of the linear section is given by the Youngs modulus E [7].

2.3.2 What is a strain gage?

Strain gages are used for measuring the strain on a surface in order to determine the internal stress of a material. When designing structures it is very important to know the stress in a material. The stress tells if the design of a structure ensures the necessary strength demanded by safety and economics.

There are many different types of strain gages for different measurement tasks. The most common one is the bonded metallic strain gage [7]. This strain gage type is built in different layers as seen in Figure 5. The grid pattern (sensing elements) is made from very thin metallic foil (3-6µm), usually a copper-nickel alloy foil that has a specified resistance, usually 120 Ω or 350 Ω at room temperature.

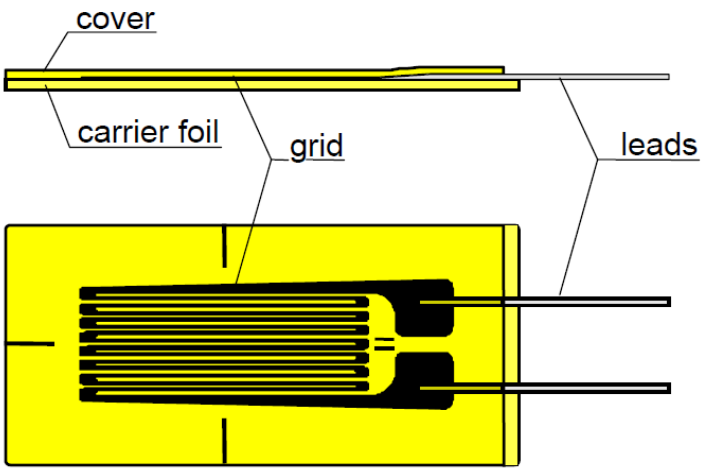

Figure 5: Strain gage structure [8].

To measure strain in an object, the strain gage is bonded to the object´s surface with an appropriate adhesive and covered for example with silicon. When an object (e.g. metal beam) is exposed to external forces and deforms, the length of the grid of the strain gage changes, which results in a resistance change. The alloy foil has a rate of resistance change proportional to the strain. The constant of proportionality is called the gage factor and for the copper-nickel alloy it is around 2 [7].

2.3.3 Measuring with a strain gage

Due to the small resistance change in the strain gage it is very difficult to measure the resistance accurately without an amplifier. The amplifier that is used for a strain gage measurement is a Wheatstone bridge, which is an electric circuit for the detection of a very small resistance change. Below in Figure 6 an example of a Wheatstone bridge with only one active gage is shown. The bridge consists of three resistors (120 Ω) and a strain gage (120 Ω).

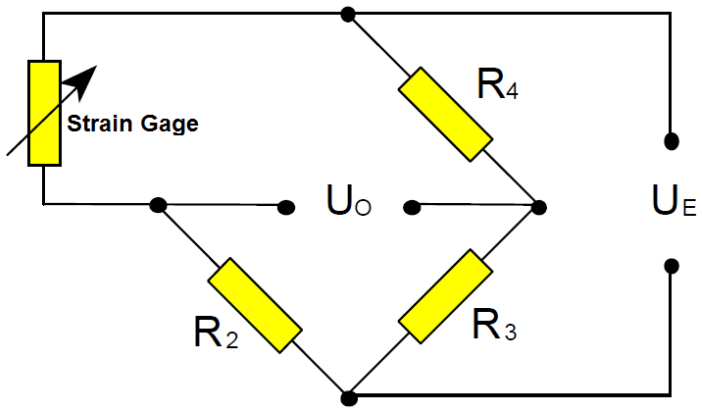

Figure 6: Wheatstone bridge [8].

Suppose that the resistance of the strain gage is Strain Gage=R_2=R_3=R_4. Then the bridge is in balance, which means that the output (U_E) is zero volts, independent of the input voltage (U_o). When the strain gage experiences a resistance change ΔR, the bridge outputs a corresponding voltage (U_E), according to [7]:

$$U_E = \frac{1}{4} * K * \varepsilon * U_o \text{ , where } K * \varepsilon = \frac{\Delta R}{R} \tag{3}$$

where K = gage factor.

Now it is possible to determine the strain ε by measuring the bridge output voltage, since all other values are known.

2.3.4 Measurements with a strain gage on a shaft

When measuring on a shaft under torque, the main goal is to determine the shear strain in the shaft. From strain it is then possible to calculate the torque in the shaft. When a shaft is exposed to torsion, the principal normal stresses occur at an angle of ± 45° to the cylindrical planes (see Figure 7). In the figure there are a large number of strain paths, which are produced when the shaft is exposed to a torque.

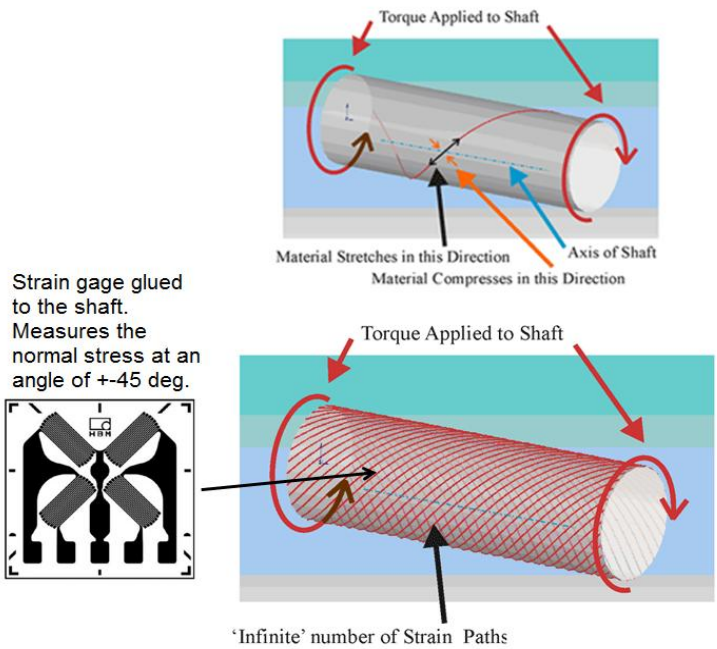

Figure 7: Example of shaft exposed to torsion [9].

There are different setups for measuring with strain gages on a shaft. One is to only use one strain gage that is glued to the shaft and has four active gages at a 90° angle between them (Figure 7) [10]. Using four active gages on the shaft is called a full bridge (4 active gages in the Wheatstone bridge) and according to the Wheatstone bridge configuration, the strain is calculated according to equation 4 [8].

$$\varepsilon = \frac{1}{4} * \frac{4}{K} * \frac{Ua}{Ub} \tag{4}$$

Where ε = strain, K = gage factor, Ua = Input voltage and Ub = Output voltage.

2.4 Measurement method 2 - Encoders

2.4.1 Basic theory

An encoder can be a linear encoder or a rotary encoder. A rotary encoder is an electro-mechanical device that converts the angular position or motion into an analog or digital signal. A rotary encoder can be used to measure the position or motion of a shaft. There are two main types of this kind of encoders, absolute and incremental. In Figure 8 the incremental encoder technique is shown to the left and its output is a series of pulses. The absolute encoder to the right has a unique digital output for each positions and the output is in gray code.

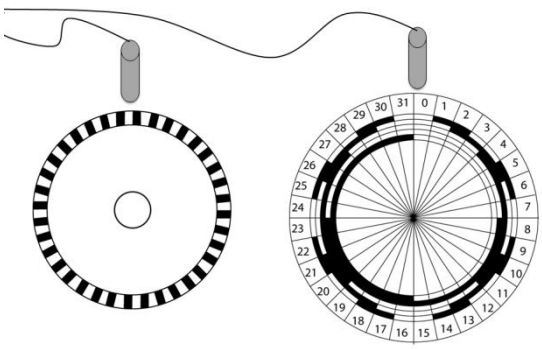

Figure 8: Basic principle of incremental and absolute encode [11].

The absolute encoder has a fixed relation between the encoder state and the physical position of the shaft. This means that even if the power to the encoder is removed, it will maintain the information of the position. An incremental encoder does not retain a relation between the encoder state and the physical position when powering up the encoder. The encoder has to go to a fixed reference point and from there it can accurately record the change in the position [12].

In this thesis work an incremental rotary encoder is used. A closer look at the theory for that type results in the following: The incremental rotary encoder works with specified pulses per revolution. The output signal consists of three different square pulses, A, B and Z. Pulse B is phase shifted 90 degrees to the pulse A, and the Z pulse is the reference point, also called zero pulse, produced once per complete revolution.

A and B pulses are shifted so that a controller can determine the direction of movement, clockwise or counter clockwise. When rotating clockwise A leads B by 90° and when rotating counter clockwise B leads A by 90°. Figure 9 shows the form of the output pulses [13].

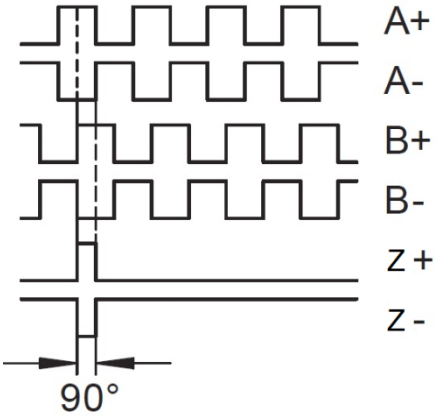

Figure 9: Output pulses from encoder.

An internal counter in the data acquisition uses the positive edges of signal A to calculate the pulses, and it will count up when signal A leads signal B, and count down when signal B leads signal A. When the Z pulse comes, the counter will reset and start counting again from 0 counts (Figure 10).

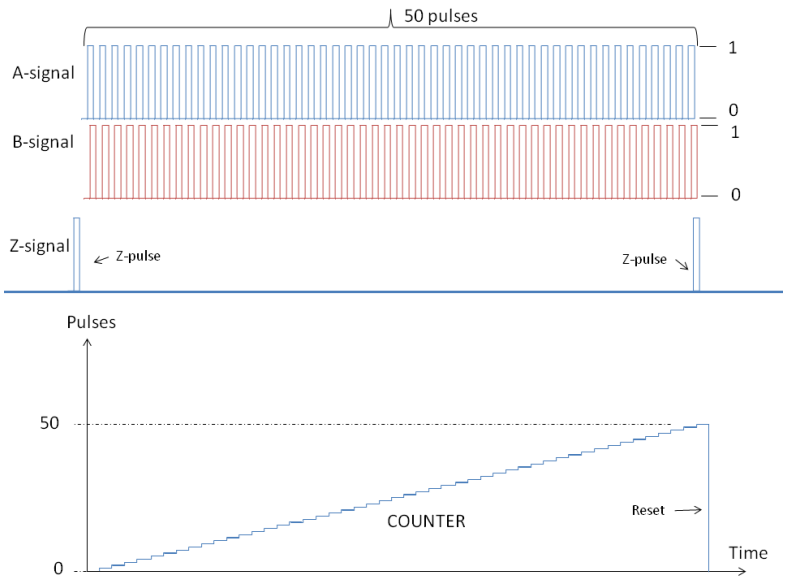

Figure 10: Example of 50 pulses per revolution.

There are different decoding modes for increasing the resolution when using for instance 50 pulses, these are X1, X2 and X4. X1 mode uses the rising edge of signal A to calculate the counts. This means that if there are 50 pulses per revolution, the angle resolution is 360° divided by 50 pulses (Figure 10). When using X2 mode the counter will count both rising and falling edges of signal A, therefore the resolution is increased by a factor 2. If X4 mode is used the counter will count rising and falling edges on signal A and signal B, which will result in a resolution increased by factor 4. In this thesis work X1 mode is used, this is because the tolerance of the pulse phase shift between A and B pulses in Baumer encoder is 90°±2°. Therefore X1 mode is used so that it will only count the rising edge of pulse A.

2.4.2 Baumer magnetic belt encoder

The encoder that is used to measure the torsional vibration and rotational vibration is a Baumer HDmag flex magnetic belt encoder (Figure 11) [14]. The encoder comes with a magnetic belt that can be ordered for different shaft diameters (300 mm-3183 mm) and the number of pulses per revolution can also be specified (512-131072 pulses/revolution). The sensing head has two scanning units for consistently high signal quality, even with a large air gap. This encoder can be installed when a shaft is fully assembled in an engine, and can be installed somewhere along the shaft.

The output signal that the encoder provides is a square-wave signal (HTL, TTL, RS422) and sine-wave (Sin Cos 1Vpp). In this thesis work the TTL signal was used, where TTL stands for transistor-transistor logic. This is a circuit that determines if a voltage signal is a logical 0 or a logical 1, which means that the output signal is a square-wave with 0 and 1 level.

The present encoder was chosen because of the good specifications it has according to the manufacturer [14]:

- Shaft removal and maintaining a free shaft end are not required.
- Wear-free measuring principle, maintenance free and virtually unlimited service life thanks to contactless magnetic scanning technology.
- High resolution, irrespective of diameter
- Unaffected by dust, dirt liquids and condensation.

Figure 11: Baumer HDmag flex magnetic belt encoder [14].

As mentioned in chapter 2.1, there are different output quantities for different techniques when measuring torsional vibration. By using the Baumer magnetic belt encoder the output quantity will be in degrees (twist of the shaft). Therefore, to be able to compare the two measurement methods, the output quantity [degrees] needs to be converted into torque [Nm]. See chapter 5 for more information on the comparison.

2.4.3 Counter architecture in the DAQ

In the DAQ (data acquisition system) there is counter technique called super counter [5]. This counter is an improvement of a standard counter. As seen in Figure 12 there are two internal counters. The main counter is running on event counting and the sub counter measures exactly the time of the input event. The resolution for the sub counter is 1/102,4 MHz relative to the ADC-clock (Figure 12). This means that the counter knows exactly (within the resolution of the system) when an event occurs and from there it interpolates the event counting results to the sample point.

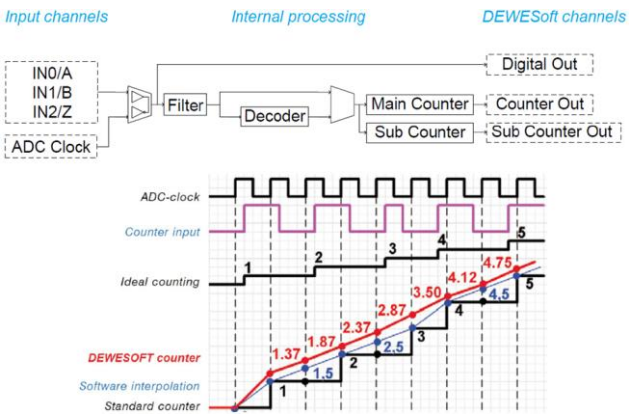

Figure 12: Dewesoft super counter versus a standard counter [5].

2.5 GUM

2.5.1 Introduction

During this thesis work an estimate for the uncertainty of both measurement methods needed to be made. This is done to be able to compare the methods and have a better overview of the results for both measurement methods. There are different ways to calculate the uncertainty and the one that was chosen was GUM, published by ISO (International Organization for Standardization). GUM is a guide that provides general rules for evaluating and expressing uncertainty in measurements [15]. The principles of this guide can be applied in a broad spectrum of measurements, from the shop floor to fundamental research.

Because of uncertainty in measurements, no measurements are exact. Uncertainty is the range around the measured value, meaning that there is a certain probability that the correct value will be found within this range. As seen in Figure 13, the analog indicator shows that the reading value is an estimate, because it is hard to say if the pointer is more towards the lower value or to the higher value.

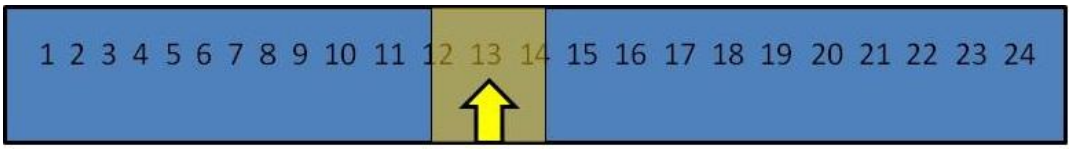

Figure 13: Example of an analog reading.

The source of the different contributions to the uncertainty of a measurement comes from different areas as seen in Figure 14.

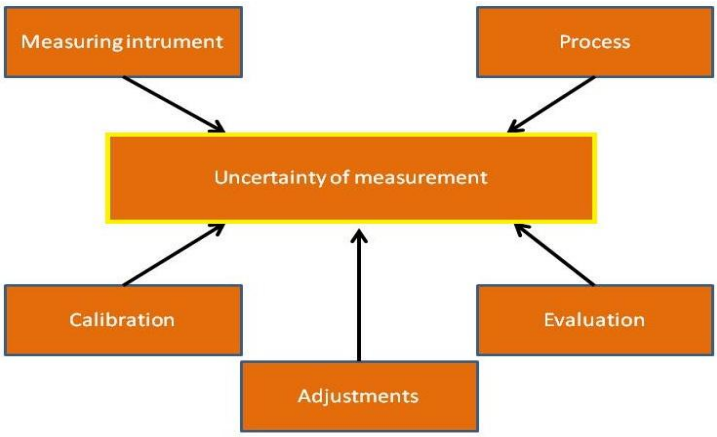

Figure 14: Sources of uncertainty in a measurement.

Measuring instrument

Inaccuracies and tolerances are found in sensors or amplifiers, e.g. sensitivity tolerances, non-linearity, hysteresis behavior, temperature effects, creep, noises, etc.

Process

In the measurement process there are different parameters that affect the uncertainty, such as process connection, temperature distribution during measurement, parasitic loads, environmental influences, force shunts, the natural frequencies of the system, etc.

Adjustment

There are different ways of adjusting the measuring chain. The most accurate method is to adjust the chain based on a calibration certificate, but this means that every component in the chain needs to have a calibration certificate. Another method is to calibrate by direct loading. Then the whole measurement chain is calibrated and the precision will depend on the accuracy of the reference.

Calibration

Some questions need to be asked and answered when using the measurement equipment. Is it calibrated? What is the uncertainty of each component in the measurement chain? Is the process compatible with the measurement task? When was the last calibration?

Evaluation

In this category all the influences that do not belong to any of the other categories will be considered, e.g. low-pass filters and sampling rates [16].

2.5.2 Calculation of the uncertainty

According to the GUM guideline the standard uncertainty can be determined by two different methods, method A or method B [16].

Method A uses a large number of statistically independent measurements and by following the procedure according to GUM the standard uncertainty can be determined. This method has the restriction that the measurement task has to be repeatable and it is difficult to meet the requirement for statistical independence.

Method B uses as much information as possible from the measurement chain. Every individual effect that may cause measurement errors is taken into account. When combining these errors mathematically, method B determines the standard uncertainty. The calculation procedure for method B is shown in Figure 15.

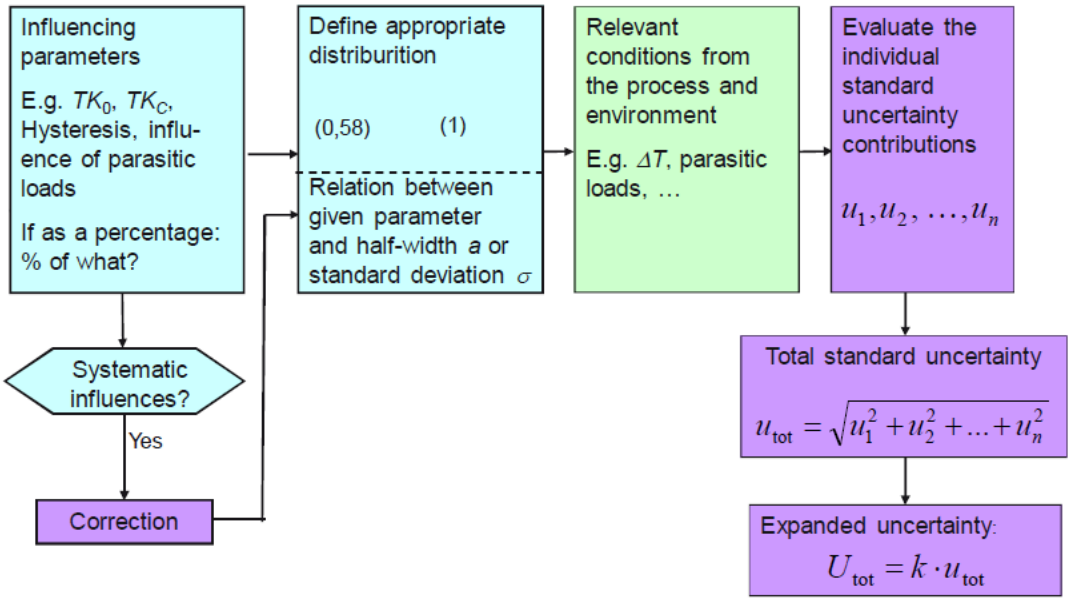

Figure 15: GUM model for calculating the uncertainty in method B [16].

Method B is used in this thesis for the calculation of the uncertainty in the measurements with the strain gage (case 1) and the encoders (case 2). The complete calculations for case 1 and case 2 are found in Appendix 1.

3 Assembly

3.1 Strain gage

The installation was made on a W20V32 diesel engine cam-shaft (b-bank). The location of the sensor can be seen in Appendix 2**.** In Figure 16 an overview of the main components in the measurement chain is shown.

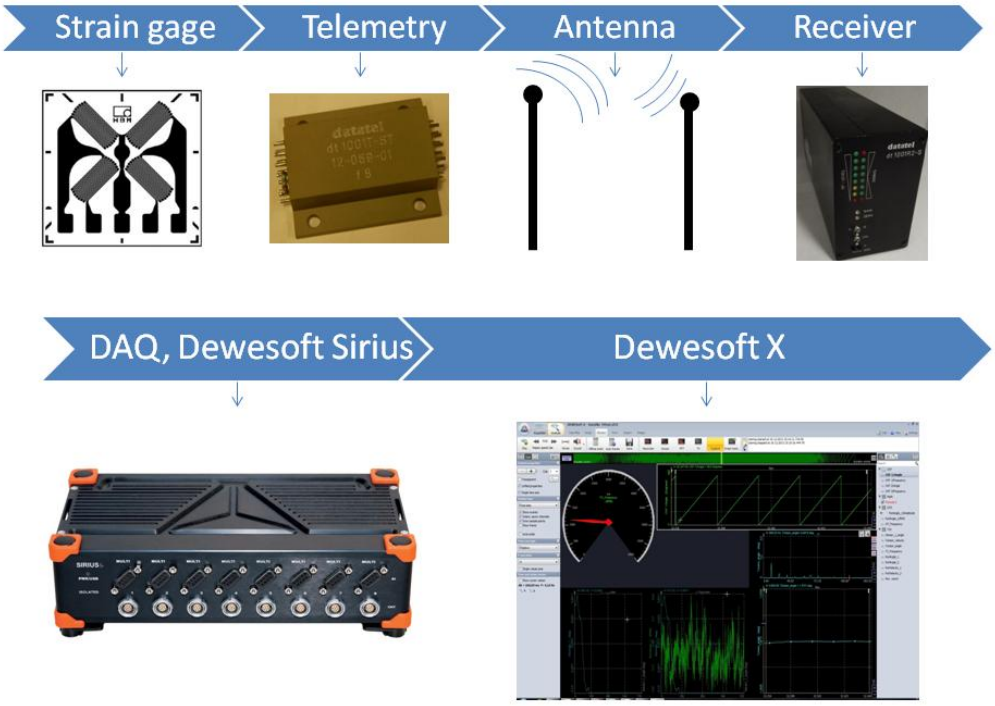

Figure 16: Overview of measurement chain used with the strain gage.

A strain gage with four active gages (full bridge) is adhered to the shaft and covered with silicon. This procedure is very critical because of the necessary alignment of the strain gage and also to get the strain gage perfectly bounded to the shaft. To get the strain gage bounded, it is very important that the surface is ground and clean. A proper adhesive is used when gluing. After the sensor is glued it is important to check the adhering of the glue. As a result there should be no air bubbles, dirt or unadhered glue under the sensor.

To transmit the signal from the shaft and from the engine, a telemetry system is used. It consists of a transmitter and a receiver. The transmitter is located on the shaft near the strain gage and is powered with a small battery package.

An antenna is installed for the telemetry that transmits the signals from the cam-shaft. Furthermore an antenna is installed inside the engine near the cam-shaft that receives the signals and sends the signals through a cable out from the engine to the telemetry receiver. This receiver has a voltage output that is connected to the data acquisition system. The complete installation on the cam shaft can be seen in Figure 17.

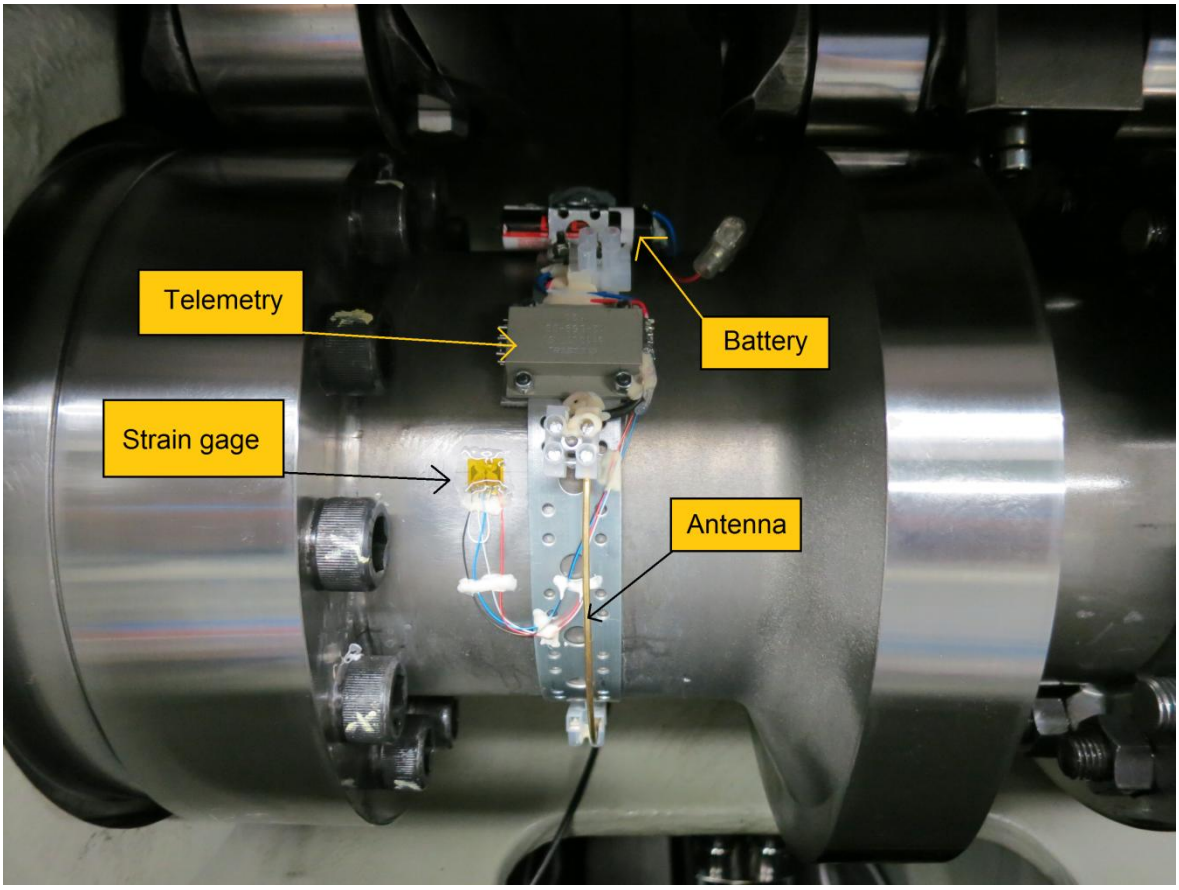

Figure 17: Installed strain gage and telemetry system.

The data acquisition system that is used to collect the voltage signal is Dewesoft Sirius. It is a data acquisition that is very flexible and has the required specifications for the measurement and it is combined with the measuring software DewesoftX, (See chapter 3.3 for the setup of the measurement in Dewesoft X).

3.2 Encoders

Two magnetic belts and encoders were installed along the cam-shaft. One on cam piece B1 and the other one on cam piece B2 (see Appendix 2). The magnetic belt is tightened around the cam-shaft where the diameter is 160 mm. Because of the fact that the minimum belt diameter that can be ordered is 300 mm, an extension for the shaft diameter needed to be built. Also the scanning head had to be mounted 1.5 mm from the belt and therefore a frame and a holder for the sensing head had to be built. In the next chapter a 3D model of the parts and assembly on the engine are made using the 3D design software Solidworks.

3.2.1 Design

Two identical aluminum extension frames that will be located under the original cam-shaft service cover on the engine have been designed to support the scanning head. The frame is designed to be robust so that the scanning head does not vibrate and move while the engine is running. Figure 18 shows the complete extension frame with the support for the scanning head. The complete drawing can be found in Appendix 3.

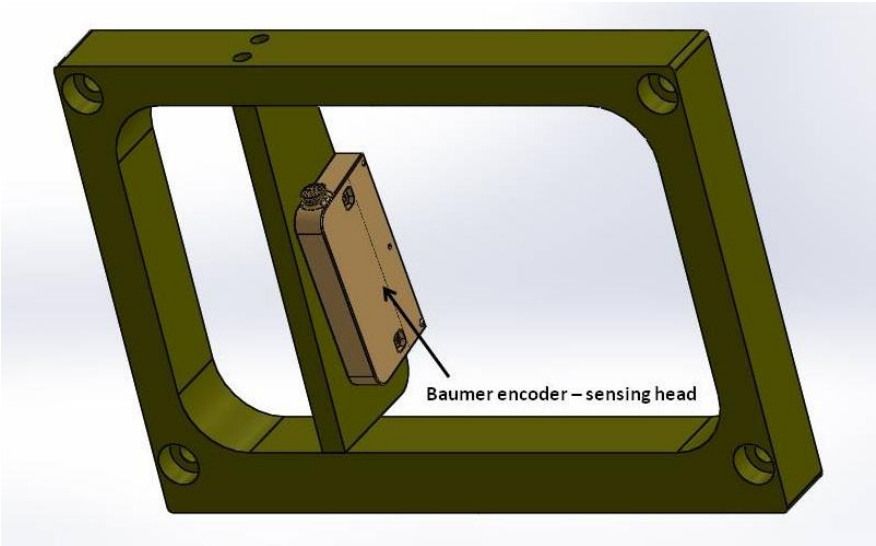

Figure 18: The designed cover extension frame.

The extensions for the shaft diameter are also two identical parts. The parts need to be light so that they don´t have an influence on the cam-shaft properties. Therefore the parts are made of aluminum. They are designed as a ring with an inner diameter of 160 mm and an

outer diameter of 300 mm. To be able to assemble the parts onto the shaft they are cut in half, in other words one part consists of two half rings, like two half moons.

These two half rings are then tightened together around the shaft so that they become a full ring with an outer diameter of 300 mm, upon which the magnetic belt will be placed. To prevent the aluminum ring from moving in an axial direction when the cam-shaft is rotating, the aluminum ring has tightening bolts that are pointed inwards toward the shaft (Figure 19). The complete aluminum part is shown in Figure 19 and the drawing can be found in Appendix 4.

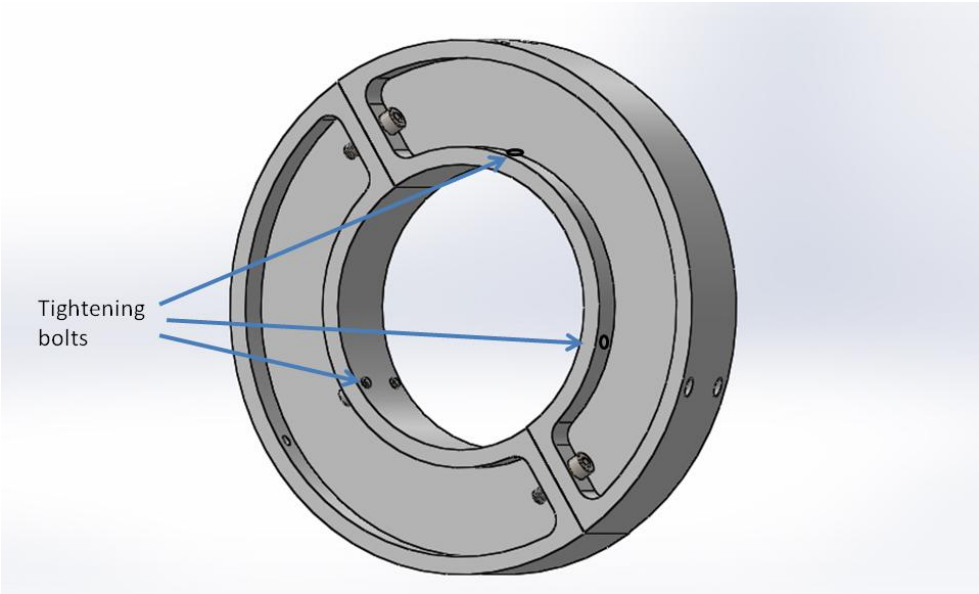

Figure 19: Designed diameter extension for cam-shaft.

To prevent an error in the designing of the parts, all parts have been assembled into the engine in a 3D model for a full overview. The parts are checked for potential collisions with other existing parts in the engine. In Figure 20 an overview is shown of the assembled parts and the encoder as they are situated in the engine.

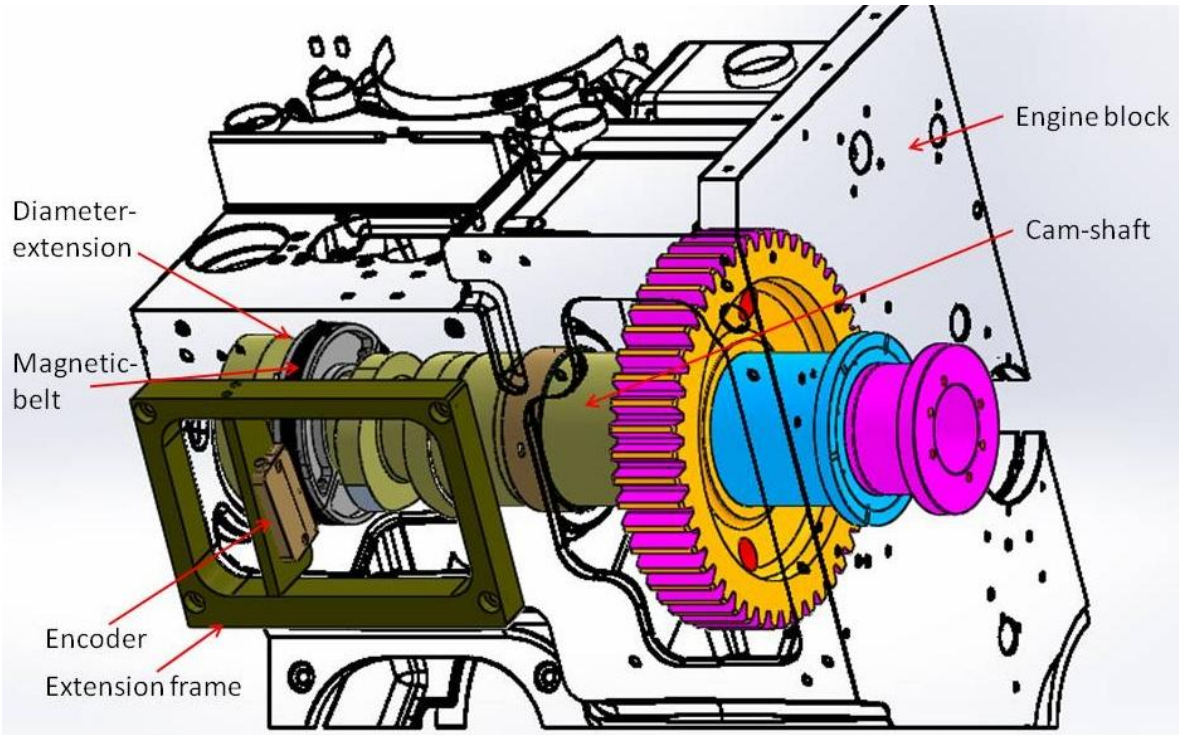

Figure 20: Test assembly in engine.

3.2.2 Assembly

The designed parts were ordered from a company specialized in CNC-milling and were made according to the drawings. The assembly of the parts started with the extension rings for the shaft diameter. These were mounted at both ends of the cam-shaft from the cam-shaft service cover. The aluminum rings did not fit directly onto the shaft because of the tolerances of the shaft and the aluminum rings. This problem was solved by making the inner diameter of the circles 0.05 mm larger using a lathe machine.

Additionally a dial indicator was used to confirm the alignment of the extension rings according to the cam-shaft center point. After the confirmation of the alignment, the magnetic belts were tightened around the extension circles (Figure 21).

The last parts that were mounted were the extension frames with the support for the encoders. They were tightened to the engine block as seen in Figure 21. The encoders were then tightened to the supports, and a 1.5 mm thick ruler was used between the magnetic belt and the scanning head to obtain the recommended air gap.

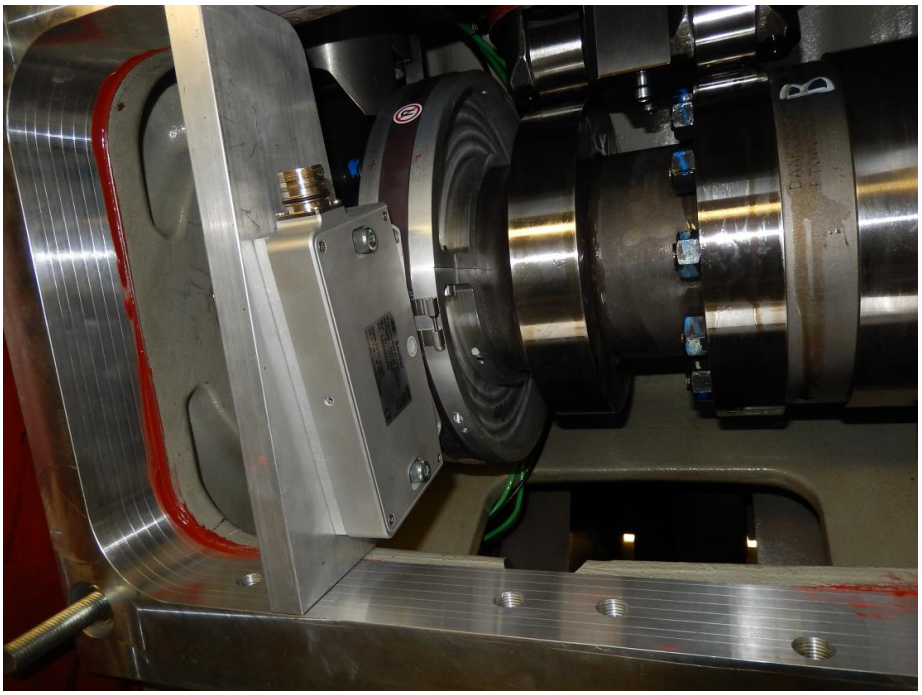

Figure 21: Assembled cover extension frame, diameter extension, magnetic belt and encoder.

As a supplement to the measurement, distance sensors were installed to measure the camshaft bearing clearance. This was done so that it would be possible to know if a measurement error occurred when measuring the magnetic pulses. The sensors were installed on a frame that was bolted to the aluminum extension frame (Figure 22). The sensors measure the shaft movement (distance) in x- and y- direction relative to the engine block. The complete assembly of all the parts is shown in Figure 23.

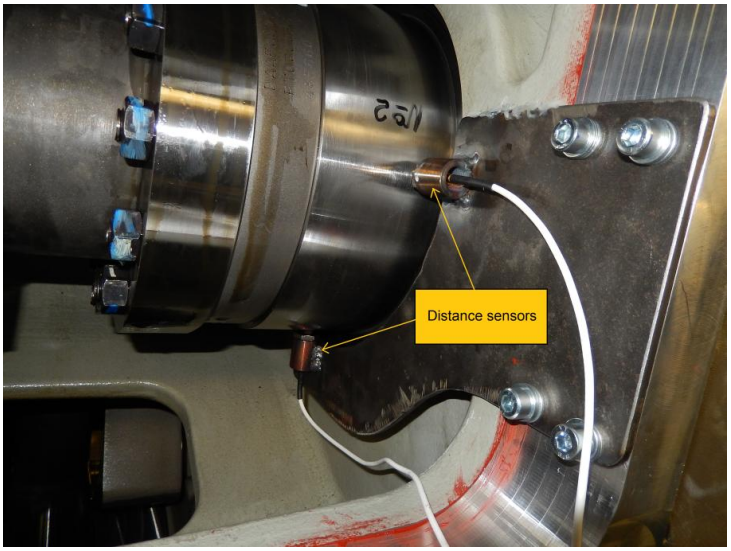

Figure 22: Distance sensors installed.

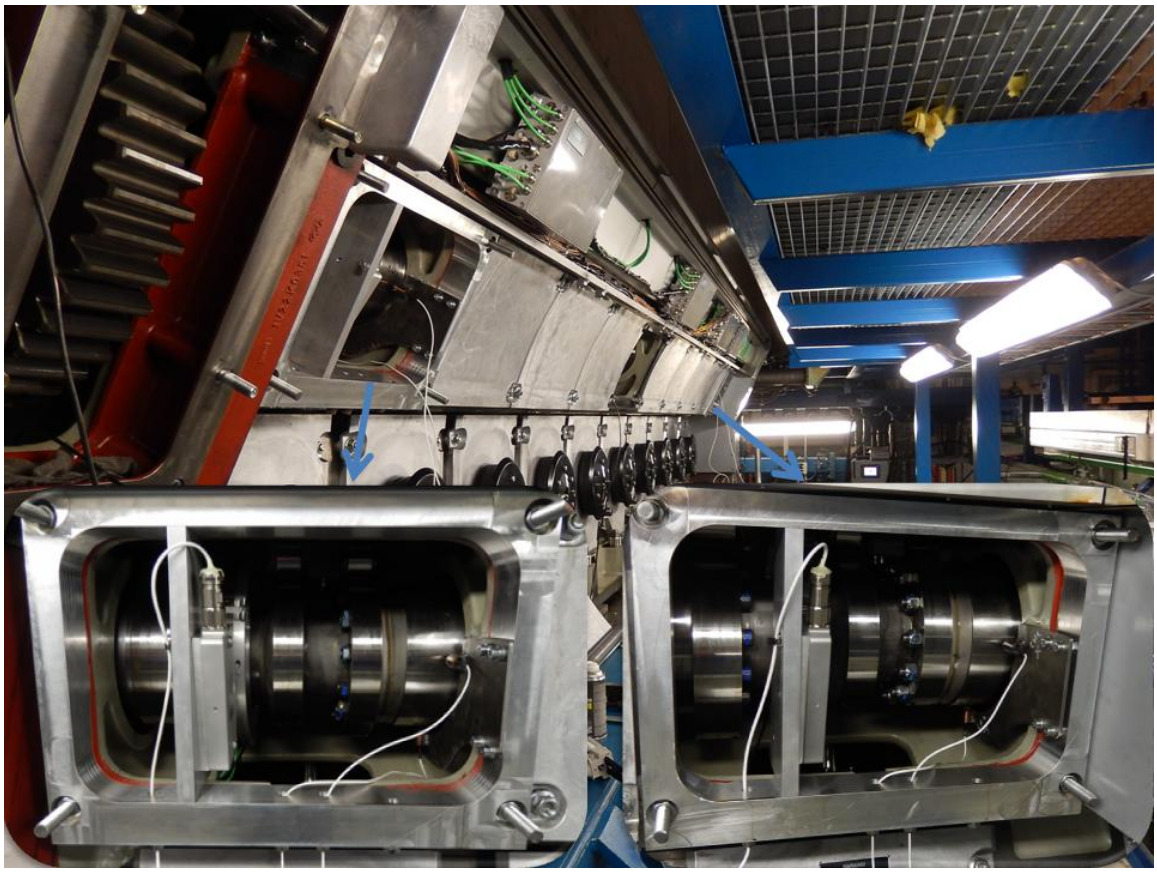

Figure 23: Overview of the locations of the measurement equipment.

4 Measurements

4.1 Setup

4.1.1 Strain gage setup

A calculation for the telemetry system is necessary when transferring a signal from the strain gage to the data acquisition. This is done so that the correct measuring range can be set and to know the output voltage from the telemetry. The strain gage only measures the strain in the shaft and the telemetry has a voltage output, which means that a relationship needs to be used to convert between strain and voltage (see chapter 2.3).

In this case when measuring a cam-shaft that has known properties (speed, shaft output effect, shaft diameter, modulus of elasticity, Poisson ratio), it is possible to calculate directly the torque in the shaft from the strain.

By putting a static resistor that corresponds to a calculated torque on the input side of the telemetry, the output voltage from the telemetry is known. As a result the output voltage versus strain is known and the telemetry is set to the correct measuring range. In Appendix 5 the whole result can be seen and the result from the calculation is that a 40,212 kNm torque corresponds to 6V, which leads to a conversion factor of 6,702 kNm per volt. Appendix 5 shows an overview of the telemetry connection and the strain gage specifications.

4.1.2 DewesoftX setup for strain gage

The output voltage from the telemetry system is plugged into the data acquisition Dewesoft Sirius and the measuring software DewesoftX (Figure 24), which are configured for the measurement task.

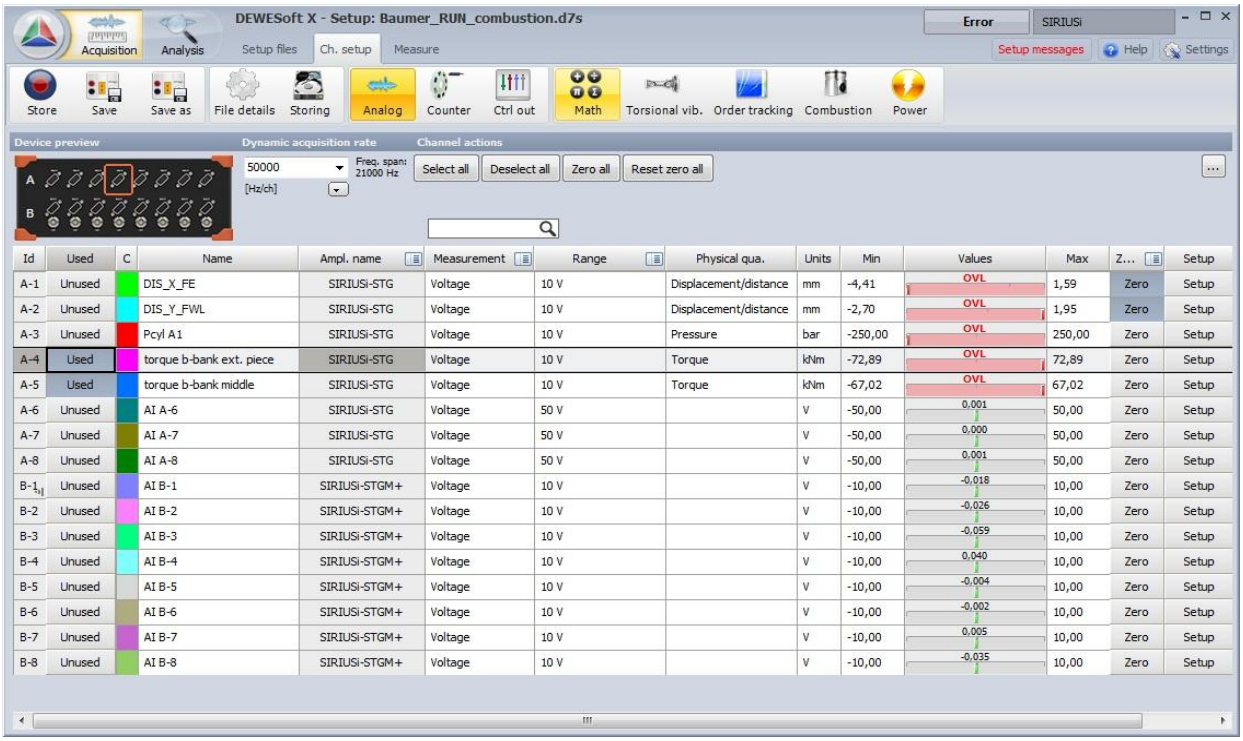

Figure 24: Overview of DewesoftX.

In DewesoftX there are two types of input signals, analog and digital. Because the telemetry system gives an analog voltage signal, channel 4 is used on the analog side in Dewesoft for measuring. The channel is configured with a name and scaled so that the measured voltage is translated into the corresponding torque value (Figure 25).

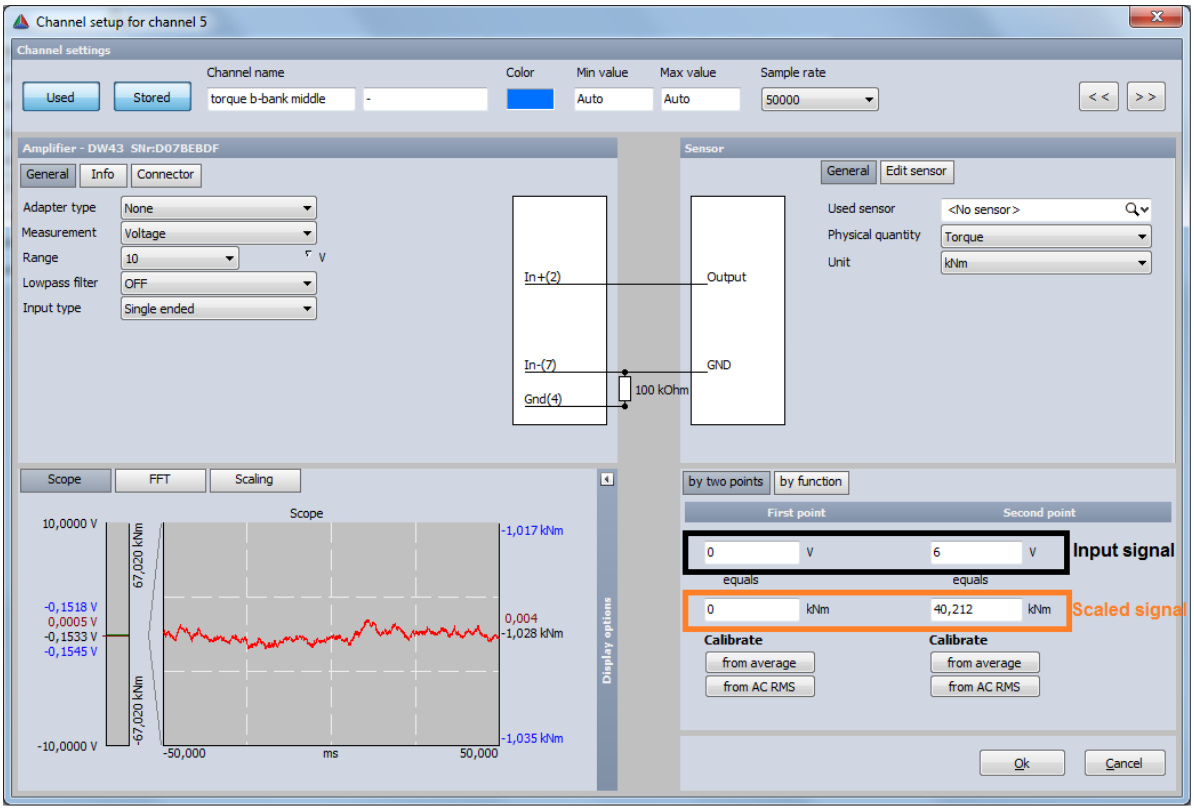

Figure 25: Scaling of the strain gage channel.

4.1.3 Encoder setup

As mentioned in chapter 2.4 the output from the Baumer encoder is a digital signal consisting of pulses. The two encoders are plugged into the DAQ as digital signals. The encoder itself needs a voltage signal of 4.75...30 VDC and the current needs to be at least 300 mA with 24 VDC. The digital input channel that the encoder is connected to can provide a voltage output (5V/12V), but it cannot provide the 300 mA that the encoder needs. The solution for this problem is to use an external power source for the encoders that provide at least 300 mA.

4.1.4 Dewesoft X setup for encoders

In the measuring software DewesoftX, there is a module for measuring torsional and rotational vibration. The software uses the pulses from the two encoders and then calculates the following values:

- Rotational angle [deg] for encoder 1 & 2.
- Rotational velocity [rpm] for encoder 1 & 2.
- Torsional angle [deg] (dynamic torsional angle that is the angle difference from encoder 1 to encoder 2 (angle of twist)).
- Torsional velocity [rpm] (difference in angular velocity from encoder 1 to encoder 2).
- Frequency (speed) of encoder 1 [rpm].

To use the TV and the RV module there are some configurations that need to be made (Figure 26). First both encoders need to be selected and defined with 2048 pulses per revolution. The input filter is used to prevent glitches and spikes in the digital signal. To find the optimal value for the filter the following equation is used to calculate the time constant (equation 5) [5].

$$Input\ filter[s] \leq \frac{1}{10*\left(\frac{RPM_{max}}{60}\right)*PulsesPerRev} \tag{5}$$

RPM_{max}= max revolutions per minute.

PulsesPerRev = pulses per revolution of the encoder.

Using RPMmax = 400 and PulsesPerRev = 2048, the formula gives that the input filter should be ≤ 7.3 µs.

The second configuration that needs to be made is the rotational DC filter. The filter will cut out the DC component of the speed signal. Equation 6 is used for this calculation.

$$RotDCfilter[hz] \leq \frac{RPM_{min}}{60} \tag{6}$$

RPM_{min} = min revolutions per minute

Using RPM_{min} = 60, the DC filter will be ≤ 1 Hz.

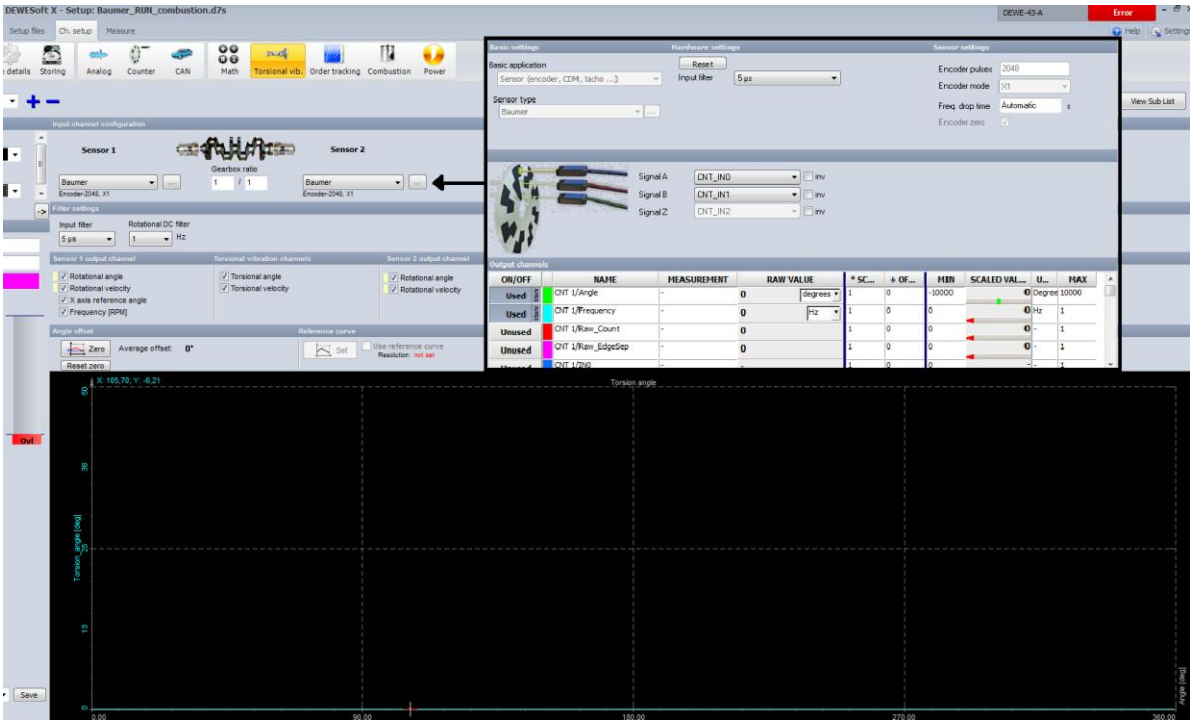

Figure 26: Torsional vibration module.

The torsional and rotational module is now configured. The reference angle is obtained from encoder 1, which is located near the end of the flywheel. This means that the measurement can be done in the time - domain or the angle - domain. However, it is also important to get the measured data in the crank angle domain.

In Dewesoft X there is also an option module called CA (combustion analysis). In this measurement the CA module is used for accessing the data in an angle domain according to the crankshaft angle. Therefore an encoder signal from the crankshaft and a TDC (top dead center) signal are connected to the DAQ. Also a pressure signal from cylinder 1 is connected to the DAQ.

4.2 Test run

The first test run of the engine was done to see if everything worked as expected. While the engine was running some measurement samples were taken. A first look at the measured data was quite interesting, the torsion angle (twist of the cam shaft) was rising constantly. This implied that the cam shaft was twisting up to an angle of about 700 degrees, from encoder to encoder, according to the results. This data could not be correct, so something was wrong with the measurement.

When the engine was stopped, the service covers to the camshaft were opened to see if everything was okay with the encoders and the aluminum pieces.

Nothing was broken but the aluminum ring for the extension of the diameter was rotating around the shaft. This means that the tightening bolts that were tightened towards the shaft had come loose. One idea, and probably the right one, was that when the engine was running and the cam-shaft and aluminum rings were getting warmer, the aluminum expanded more than the cam-shaft which is made of steel. This resulted in the fact that the aluminum rings slipped around the cam-shaft and the strange measurement result for the torsion angle was caused by this. The solution was to tighten the bolts when the engine was warm and to put some epoxy glue between the aluminum rings and the shaft.

The second test run gave the expected result, which meant that the aluminum rings did not slip around the shaft this time. About 15 measurement series were taken on this test run. The most important measurements were done when the engine had reached up to 100% load. After the test run the aluminum rings and extension frames with the support for the encoders were removed from the engine.

A third test run with the same measurement principle was also made. In this test run the engine´s cam-shaft had a new gearwheel with a coupling. This coupling has a damping effect on the cam-shaft, so the expected results should show a lower torque from the strain gage, and the torsion angle (twist of the shaft) should also be lower. The measurement was made exactly the same way as the first one with the standard cam-shaft.

4.3 Analyses

4.3.1 Torsional vibration

The measurement data from the test runs were analyzed directly in Dewesoft X for each measurement file. Some new calculations were made for the data, e.g. FFT (fast Fourier transform analysis). This is done in Dewesoft X by setting up a new mathematical channel that can calculate the FFT spectrum from the data. When analyzing the data, the important results are exported into an Excel format to get better graphs for displaying the data. In Appendix 6 an overview of the DewesoftX analysis is shown.

From the first measurement with the standard cam-shaft, the result for the twist of the shaft measured with encoders is shown in Figure 27 (only relative values are shown). A cylinder pressure curve is also shown in the figure as a reference. The signal is time based and as seen in the figure the signal values are positive and negative. This means that when the signal goes from negative up to the positive, the twist of the shaft is clockwise, as seen from the drive end of the shaft. When the signal goes from positive to negative, the twist is counter clockwise. To know the total twist in degrees at a certain time, the peak to peak difference is calculated.

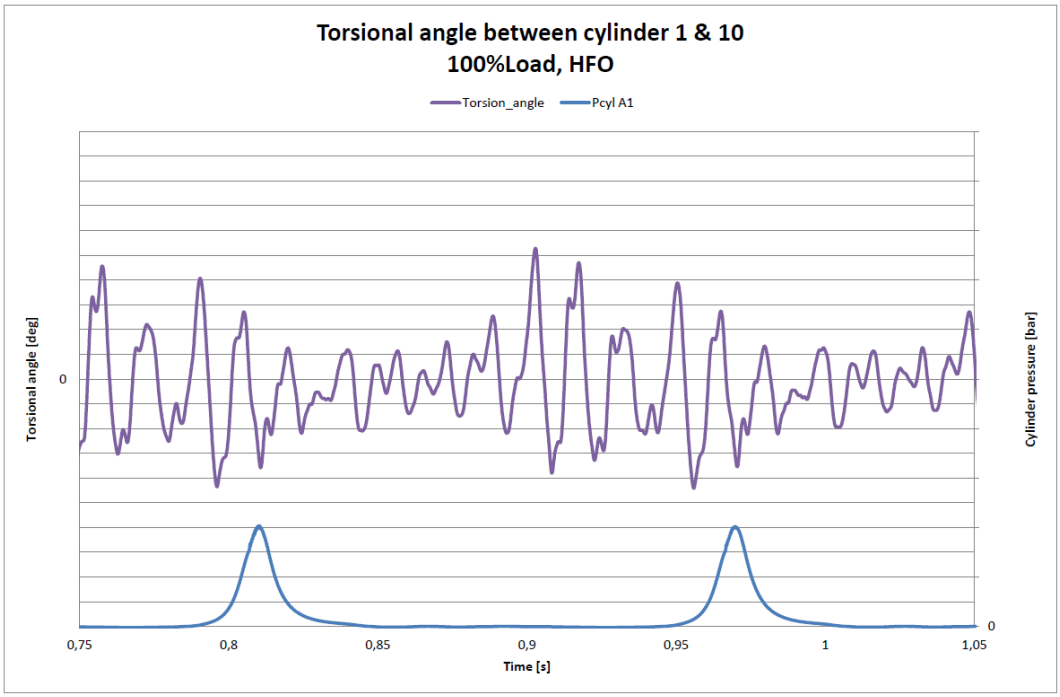

Figure 27: Result of torsional angle with encoders.

Figure 28 shows the torque at the middle of the shaft measured with a strain gage. Calculating peak to peak the maximum torque is known at a certain time.

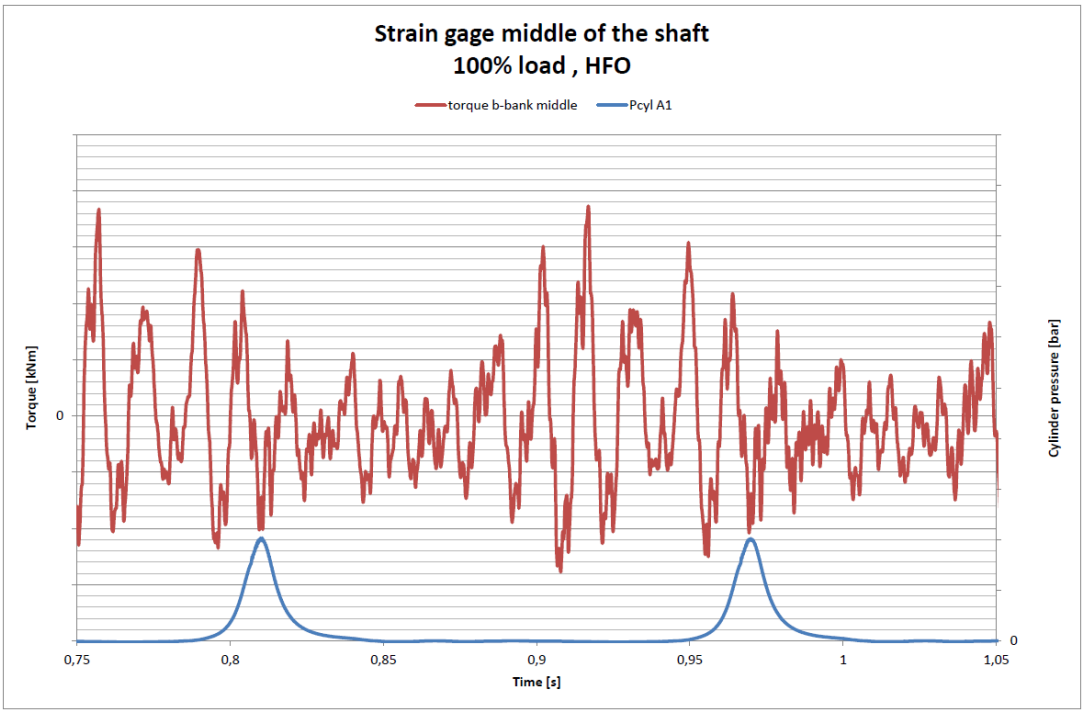

Figure 28: Result of torque with strain gage

4.3.2 Rotational vibration

As mentioned in chapter 2.2, the rotational vibration is at a maximum when the angular vibration is crossing the angular natural frequency of the shaft. When analyzing in DewesoftX it is possible to do an order tracking for extracting the orders of torsional / rotational vibrations.

Order tracking is done to transform the signal from time domain to frequency domain or order domain. Orders are the harmonics of the rotational speed. Order tracking is done by synchronizing the sampling of the input signals to the instantaneous angular position of the shaft by using a re-sampling technique.

To be able to succeed with this measurement the cam shaft needs to rotate over a RPM-range. One measurement that was collected from the test run was a sweep measurement. This was done with 0% load on the output shaft from the engine. This sweep means that it is possible to rotate the cam-shaft in a range from 325 RPM to 425 RPM. From the sweep

measurement it is easy to do the order tracking simply by using an order tracking module in the DewesoftX. The result can be plotted in a 3D waterfall, which is a frequency spectrum as a function of the cam-shaft rotation speed. In Appendix 7 a waterfall graph is made from the sweep. From the waterfall plot it is possible to find the natural frequencies of the shaft in different speeds of the shaft.

Order tracking can also be made when the engine is on run up or coast down. A measurement was made when the engine was shut down. This means that the cam-shaft is going from the ordinary RPM down to 0 RPM. In Appendix 8 an order tracking of the frequency spectrum as a function of the cam-shaft rotation speed is plotted into a 3D waterfall graph. As seen in Appendix 8 the rotational angle deviation is growing along the time and in the waterfall-graph a growing peak starts at 120 RPM.

4.3.3 Uncertainty calculation

As mentioned in chapter 2.5 the GUM standard method B was chosen. However, for the uncertainty calculation for the strain gage measurement this was not the case. Because an uncertainty value of ±5% for the strain gage mounting was used, this includes the whole process of the strain gage assembly (cleaning, grinding, alignment) and the k-factor of the strain gage. This value is based on HBM (Hottinger Baldwin Messtechnik) 50 years of experience and it is used in this uncertainty calculation. Because of the high value of the strain gage assembly compared to the uncertainty of the rest of the measurement chain, the strain gage uncertainty will be too dominated in the calculation. Therefore the GUM standard will not be used for the strain gage uncertainty, instead the measurement chain uncertainty will be added together.

As seen in Appendix 1 a table of the uncertainty values and result is shown for the strain gage uncertainty and for the encoders. These values that are listed are the values that have the most influence of the uncertainty. There are also other influences that contribute to the uncertainty in the measurement, but they are not considered in this calculation.

5 Comparison

The two measurement methods cannot be compared directly. They both aim to measure the torsional vibrations but they don't use the same measured quantities. To be able to compare the methods, the torsional angle [deg] needs to be converted into a torque [kNm]. In order to succeed with this, the stiffness per degree of the cam-shaft needs to be known.

The calculation group at Wärtsilä can calculate the stiffness of this specific cam-shaft by using FE (finite element) calculations. The result from this calculation is a stiffness factor that is multiplied with the results of the torsional angle from the encoders, which results in torque.

In Figure 29 a comparison with the calculated torque from the encoders (method 2) and measured torque (method 1) is shown. A quick look at it shows that curves are closely overlapping.

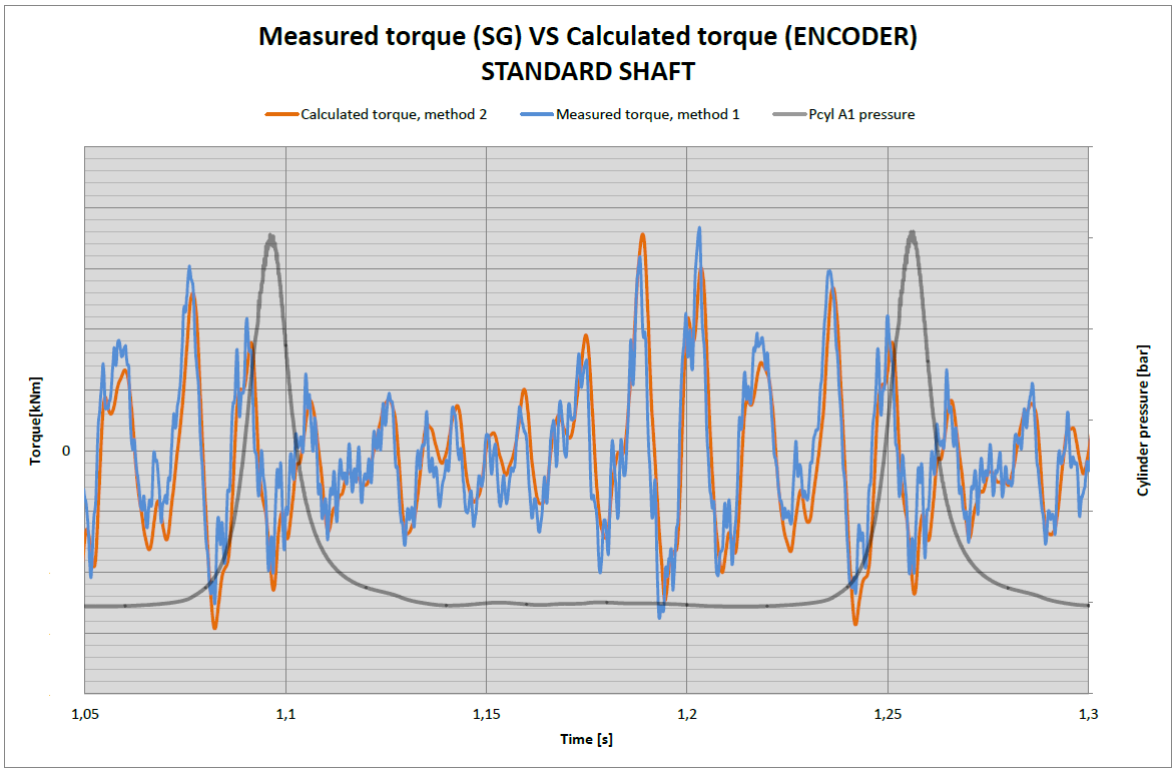

Figure 29: Comparison with measured torque with strain gage and calculated torque with encoders.

Figure 29 shows that measurement method 2 (using encoders), can be used when the torque is required in a torsional vibration measurement. Method 2 also gives the following additional measurement data for the shaft that was mentioned in chapter 4.1.4:

- Shaft speed [rpm].
- Rotational angle [deg].
- Rotational velocity [rpm].
- Torsional angle [deg].
- Torsional velocity [rpm].

An FFT analysis of both measurement methods is shown in Figure 30. In FFT analysis it is possible to find the natural frequencies of the shaft. This means that a critical resonance of the shaft can be seen. The FFT analysis of measurement method 2 is taken from rotational velocity of the encoder at the free end of the shaft. This means that the FFT analysis cannot be compared directly, because the strain gage and encoder at the free end of the shaft are not in the same location, but they have quite the same results.

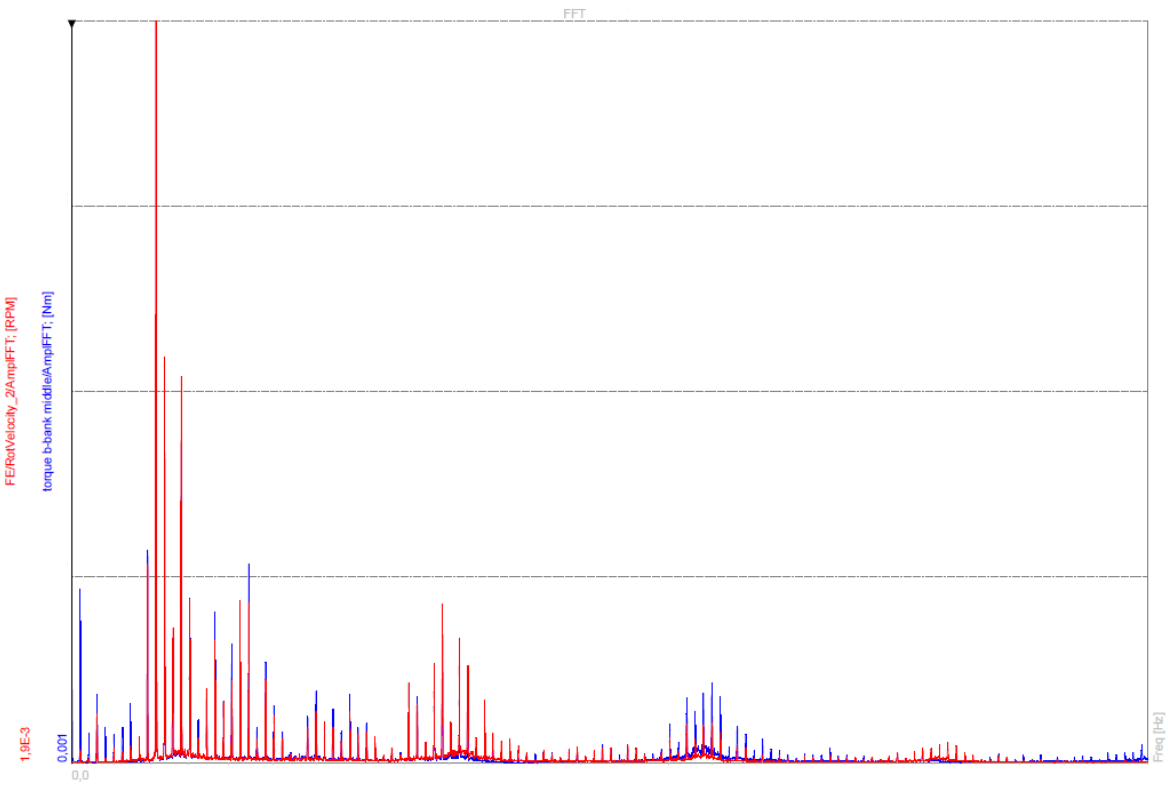

Figure 30: FFT spectrum, rotational velocity at the Free End (red line) and torque in the middle of the shaft (blue line). X-axis is frequency [Hz].

6 Results

As a result of this thesis a new measurement method has been validated, when torsional vibration measurement is required on a shaft. Method 2, using encoders, has been proven to give the same results as method 1, using a strain gage that is located on the middle of the shaft. An uncertainty of 5.158 % has been calculated for method 1 with 100% probability. For method 2 the uncertainty is 0.00348 deg of the reading value for rotational vibration, and 0.00696 deg of reading value for torsional vibration with a probability of 99.73 %.

As this work was the first test done in order to compare the two measurement methods, and it was successfully done, some further investigations using the measurement method with encoders will be made. This new investigation will be based on the same principles as the present measurement, but the two magnetic belts and encoders will be located on the cam-shaft extension piece (Appendix 2), about 20-40 cm from each other. This requires more pulses per revolution so it will be possible to detect the small twist between the encoders. This is done so that the torque at the extension piece can be determined. Usually the torque of the extension piece is more important to know than the torque in the middle of the shaft.

In the future the company that manufactures the encoders can produce the magnetic belts for variable shaft diameters. This will result in a faster assembly of the magnetic belts, since the aluminum rings for the shaft diameter are no longer necessary. It will also remove a small measurement error when the rings are not required, this is because of the mechanical tolerances that the rings have.

7 Conclusion

The whole measurement project and planning has been demanding to some degree, because there was a lot of knowledge about the measurement that I did not understand when I began with this thesis work. By collecting information about each component in the measurement chain and learn about the theory for both measurement methods I now have a better picture of the whole measurement task.

The goal with this thesis work has been reached. The conclusion is that it is possible to calculate the torque in the shaft based on the shaft twist between the encoders. However, when using encoders to measure the twist of the shaft, the calculated torque will always be in the center between the encoders. Therefore this project will continue, which was mentioned in chapter 6.

8 Bibliography

[1] Wärtsilä, "History," [Online]. Available: http://www.wartsila.com/en/about/company-management/history. [Accessed 25.10.2013].

[2] Wikipedia, "Wärtsilä," [Online]. Available: http://en.wikipedia.org/wiki/W%C3%A4rtsil%C3%A4. [Accessed 25.10.2013].

[3] Wärtsilä, "Torsional vibration An introduction to torsional vibration analysis," Wärtsilä internal document.

[4] Wikipedia, "Torsional vibration," [Online]. Available: http://en.wikipedia.org/wiki/Torsional_vibration. [Accessed 28.10.2013].

[5] Dewesoft, "Rotational and Torsional Vibration document," [Online]. Available: http://www.dewesoft.com/download. [Accessed 28.10.2013].

[6] LMS, "Torsional vibration," [Online]. Available: http://www.lmsintl.com/torsional-vibration. [Accessed 6.2.2014].

[7] Kyowa electronic instrument CO.,LTD., What´s a strain gage?, Japan.

[8] HBM, "Strain gage basics," in *HBM strain gage course at tampere*, Tampere, 2013.

[9] Electronics, Datum, "Experts in Torque Measurement," [Online]. Available: http://www.datum-electronics.co.uk/news/experts-in-torque-measurement.aspx. [Accessed 21.2.2014].

[10] K. Hoffmann, An Introduction to Measurements using Strain Gages, Hottinger Baldwin Messtechnik GmbH, Darmstadt, 1989.

[11] Rockwell Automation, "Encoders," [Online]. Available: http://www.ab.com/en/epub/catalogs/12772/6543185/12041221/12041235/print.html. [Accessed 21.02.2014].

[12] Wikipedia, "Rotary encoder," [Online]. Available: http://en.wikipedia.org/wiki/Rotary_encoder. [Accessed 24.1.2014].

[13] Dynapar, "Incremental Encoder," [Online]. Available: http://www.dynapar.com/Technology/Encoder_Basics/Incremental_Encoder/. [Accessed 24.1.2014].

[14] Baumer, "Incremental bearingless encoders," [Online]. Available: http://www.baumer.com/se-en/products/rotary-encoders-angle-measurement/bearingless-encoders/magnetic-belt-encoder-hdmag-flex/. [Accessed 24.1.2014].

[15] BIPM, "Evaluation of measurement [PDF document]," 2008. [Online]. Available: http://www.bipm.org/utils/common/documents/jcgm/JCGM_100_2008_E.pdf. [Accessed 31.12.2013].

[16] HBM academy, *The practical way to determine uncertainty of measurement [Internal PDF]*.

Appendices

Appendix 1

Overview of uncertainty calculation

Strain gage				
Influence	**Given value**		**Calculated value**	
Strain gage mounting and k-factor	±5%		5	%
Telemetry sensitivity drift vs transimtter temperature(50°C difference)	±0,002%/°C	0,002% x 50°C=	0,1	%
Dewesoft Sirius input voltage channel	±0,05%		0,05	%
Shunt calibration ohm decade	±0,008		0,008	%
		Total sum of uncertainty(100%):	5,158	%

Encoder					
Influence	**Given Value**		**Calculated value**		
u1 = Angle accuracy DEWESOFT COUNTER	φres=((375rpm/60)*360/102,4 x 10^6		2,19727E-05	deg	
u2 = Aluminum rings uncertainty with dial indicator	0,15mm		0,001999999	deg	
		Using GUM method B:			
		>> rectangular distribution u1	0,00002197265625 * 0,58 =	1,27441E-05	deg
		>> rectangular distribution u2	0,00199999933333361 * 0,58 =	0,00116	deg
		>>combined standard uncertinty, utot	0,00116007		
	Determination of the expanded measurement uncertainty U				
		U = k * utot			
Level of confidence	Coverage Factor	U-->			
68.27%	1	0,00116007			
90%	1,645	0,001908315			
95%	1,96	0,002273736			
95.45%	2	0,002320139			
99%	2,576	0,002988339			
99.73%	3	0,003480209			
		1 encoder(RV)----------	**Reading value = 0,52 deg ±0,0034 k = 3(99,73%)**		
			0,669270933 %		
		2 encoders(TV)----------	**Reading value = 0,52 deg ±0,0069 k = 3(99,73%)**		
			1,338541866 %		

Appendix 2

Overview of cam-shaft

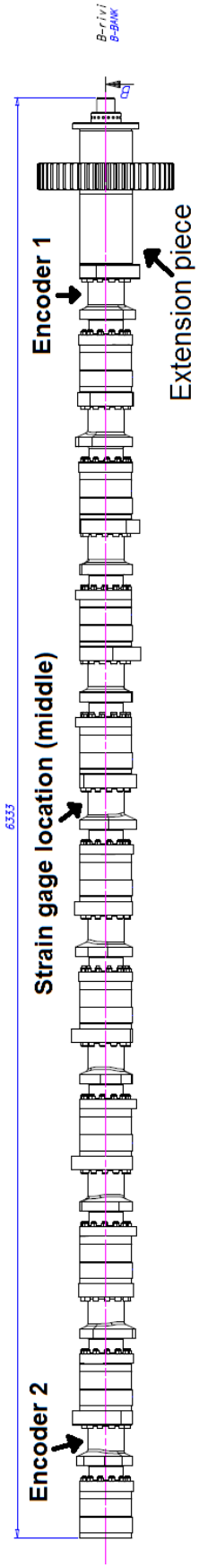

Appendix 3
(1/2)

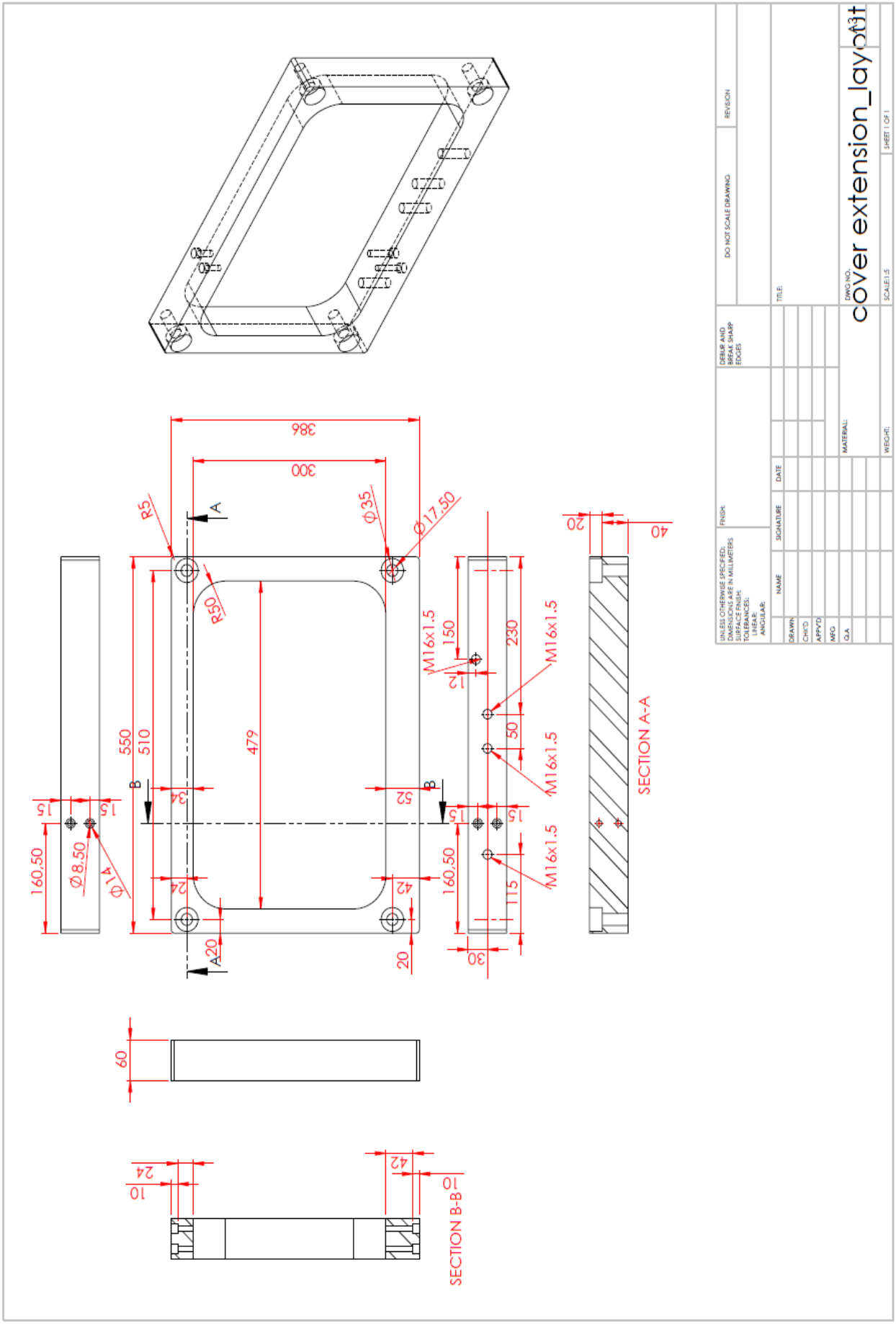

Appendix 3
(2/2)

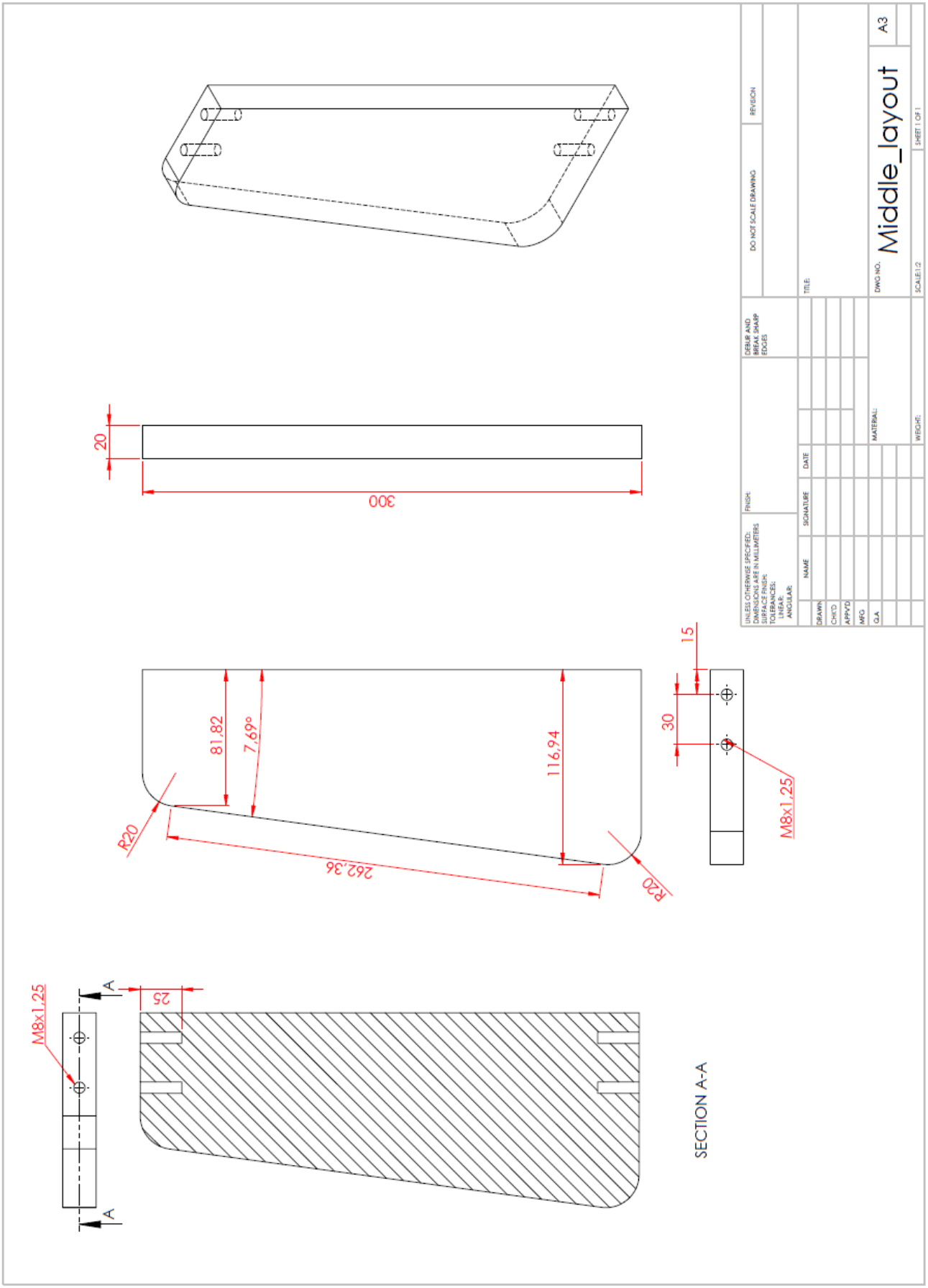

Appendix 4
(1/2)

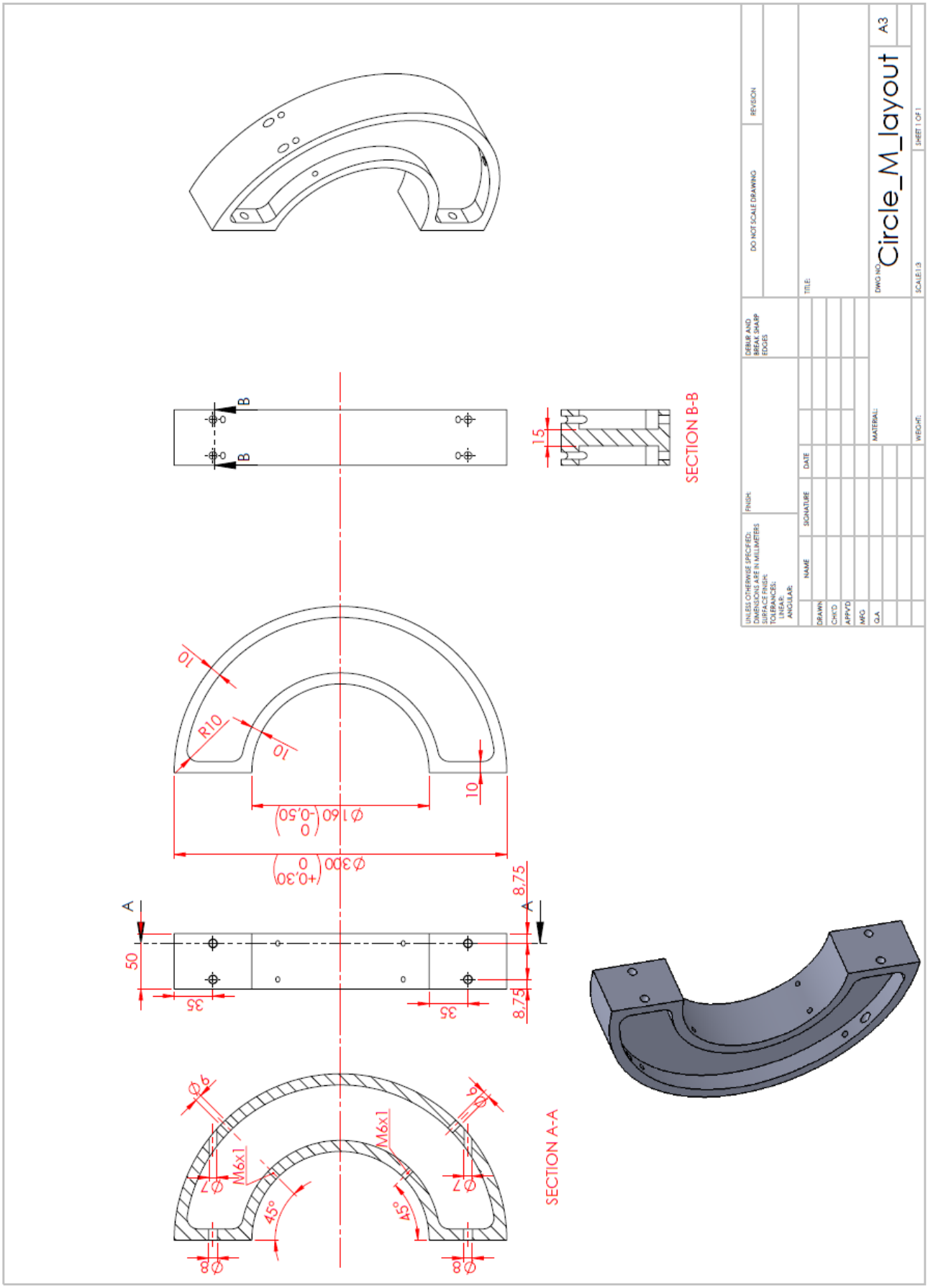

Appendix 4
(2/2)

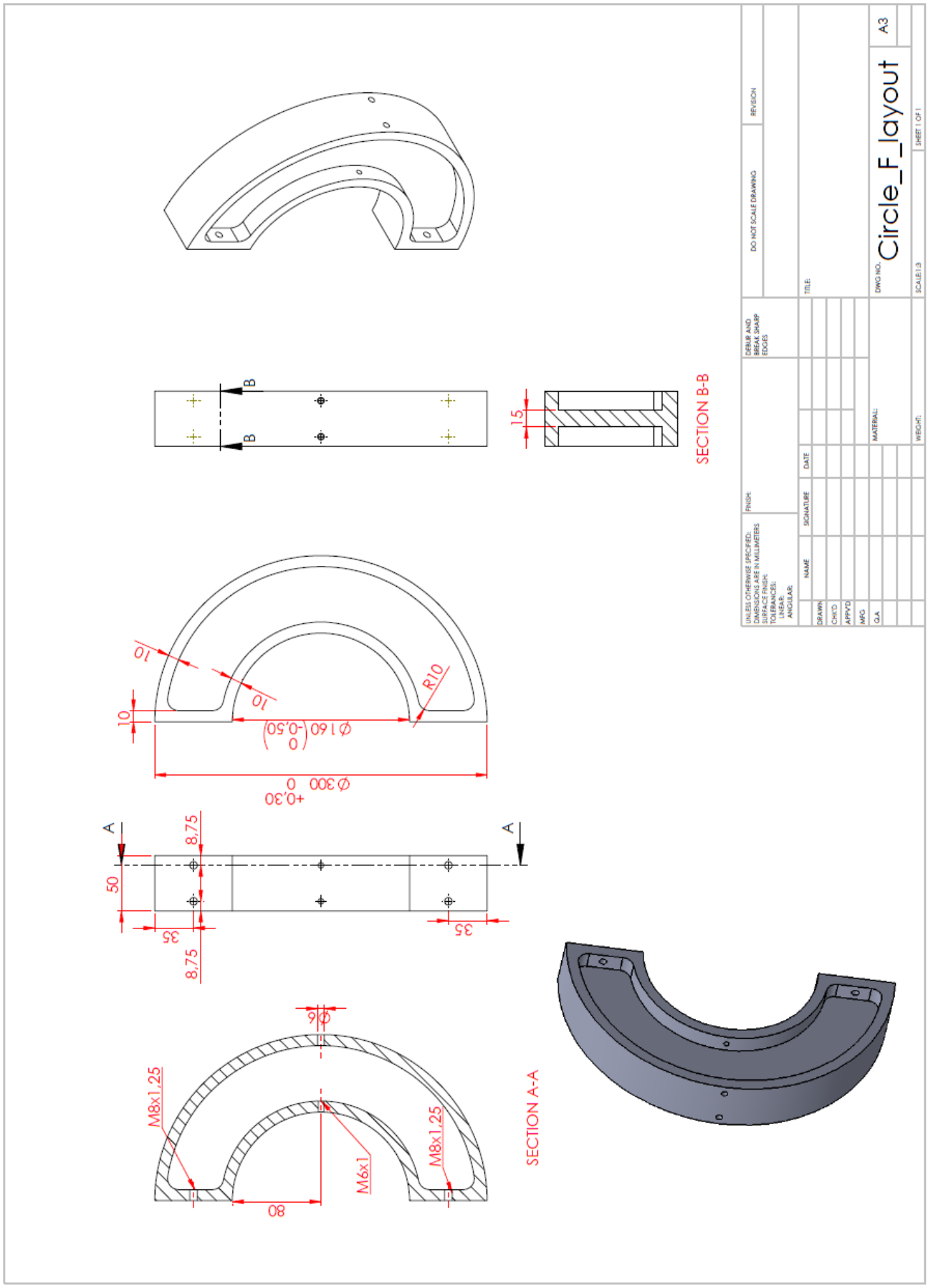

Results of calculation from strain to torque

Beräkningar för effektmätning.
kanal f20,(W20V32F Selli 1 Nax_B_Center(PAAE234059)

Konvertering från N/mm2 => Nm			
50,000	N/mm² =>	40212,4	Nm

Shunt resistor

E	206000		Vakio teräkselle
P	1500	kW	Täysi teho
n	375	rpm	Täyden tehon rpm
D_{out}	0,16	m	Akselin ulkohalkaisija
d_{inner}	0	m	Akselin sisähalkaisija
k	1,99		Liuskavakio / Liuskapaketista
Tdyn		Nm	Laskelmista
R	350	ohm	Liuskan resistanssi

2G	158461,5385	N/mm²	
Tstat	38197,18634	Nm	
Wv	0,00080425	m³	
Tau_dyn	0	N/mm²	
Tau_stat	47,49430483	N/mm²	
Tau_tot	47,5	N/mm²	
epsilon	0,000299721	m/m	Venymä
deltaR	0,835023657		
R+deltaR	350,8350237		
1/(R+deltaR)	0,002850343		
1/R	0,002857143		
1/Rshunt	6,8003E-06		
Rshunt	**147052,4**		

Shunt värden:

1	6,01	#VALUE!
2	-6,02	#VALUE!
3	-5,99	#VALUE!
4	6,00	#VALUE!
	Average	#VALUE! V
		6,00

#VALUE!	50,000	N/mm²
1,0	#VALUE!	
Peak	#VALUE!	Matas in i DI-2200

Valitaan:

Rshunt	139000	ohm
1/Rshunt	7,19424E-06	1/ohm
1/(R+deltaR)	0,002864337	1/ohm
R+deltaR	349,1209186	ohm
deltaR	0,87908145	ohm
epsilon	0,000315535	
Tau_tot	50,00	N/mm²

Tau_stat =	50,00	N/mm²
Bör visa ca	#VALUE!	V vid 100 % load
25%	#VALUE!	V
40%	#VALUE!	V
50%	#VALUE!	V
75%	#VALUE!	V
90%	#VALUE!	V

Range resistor

Umess	2,982227345	mV
V	167,6599207	mV/mV
Rv	**1980,2**	Ohm

40212/6V = 6.702Kn

Valitaan	2200	ohm
V	150,9090909	
Umess	3,313253012	
epsilon	0,00033299	
Tau_tot	52,8	N/mm²

20V32F_Torque.xls

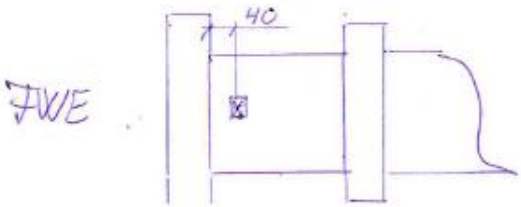

Torque

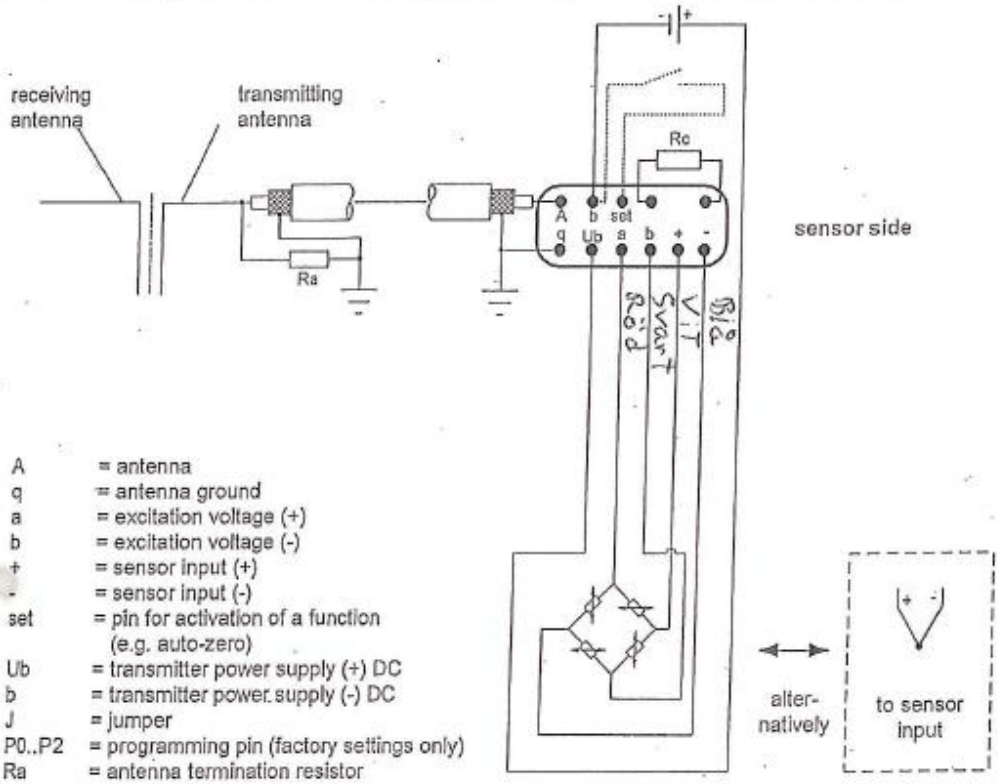

A	= antenna
q	= antenna ground
a	= excitation voltage (+)
b	= excitation voltage (-)
+	= sensor input (+)
-	= sensor input (-)
set	= pin for activation of a function (e.g. auto-zero)
Ub	= transmitter power supply (+) DC
b	= transmitter power supply (-) DC
J	= jumper
P0..P2	= programming pin (factory settings only)
Ra	= antenna termination resistor
Rc	= cal resistor
⏚	= machine ground

ABM 1-VY41-3/350

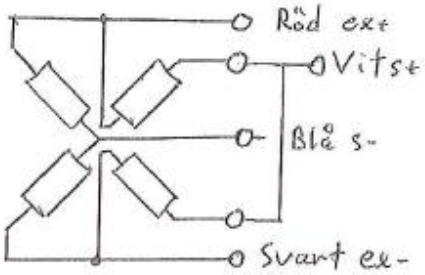

	Jumper (x = set)
Mode	J1
TC-operation	x
SIG-operation	

measuring range	J2	J3	J4
1	x	x	x
2		x	x
3	x		x
4			x
5	x	x	
6		x	
7	x		
8			

Measuring range conditioning can be take from the transmitter specification

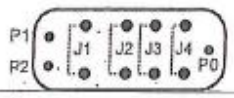

configuration side

Signal conditioning

strain measuring range			
	$V_{gage}1 \rightarrow U_{in,max}$ =	50	mV
	$V_{gage}2 \rightarrow U_{in,max}$ =	30	
	$V_{gage}3 \rightarrow U_{in,max}$ =	18	
	$V_{gage}4 \rightarrow U_{in,max}$ =	12	
	$V_{gage}5 \rightarrow U_{in,max}$ =	8	
	$V_{gage}6 \rightarrow U_{in,max}$ =	5	
	$V_{gage}7 \rightarrow U_{in,max}$ =	3	
	$V_{gage}8 \rightarrow U_{in,max}$ =	1	

Telemetrie Elektronik GmbH

datatel

Berliner Allee 42 30855 Langenhagen
Tel. 0511/978398-0 Fax.0511/978398-16

Connection Interface dt1001T-ST

Zchng.-Nr. 421_000048-4.vsd Datum: 02.10.03 Kö

Änderung: 17.11.03 Kö/07.07.05Kö/24.04.09AK/14.07.11AK

HBM

Dehnungsmessstreifen
Strain gages
Jauges d'extensométrie

Bestellnummer / Order No. / No. de référence	1-VY41-3/350
Typ / Type / Type	3/350 VY41
Stückzahl / Contents / Quantité	5
Temperaturkoeffizient des k-Faktors / Temperature coefficient of gage factor / Coefficient de température du facteur k	93 ±10 [10^{-6} / °C] (-10°C ... +45°C)
Folienlos / Lot / Lot de la feuille	A412/09
Herstellungslos / Batch / Lot de fabrication	812055753
Widerstand / Resistance / Résistance	350 Ω ±0,30 %
k-Faktor / Gage factor / Facteur k	1,99 ±1,0 %
Querempfindlichkeit / Transverse sensitivity / Sensibilité transverse	0,1 %

Daten / Data / Données

Temperaturkompensation: Angepasst für / Temperature compensation: Compensated for / Compensation de température: Compensation pour — Ferritischen Stahl mit / steel with / acier avec

α = 10,8 [10^{-6} / °C]

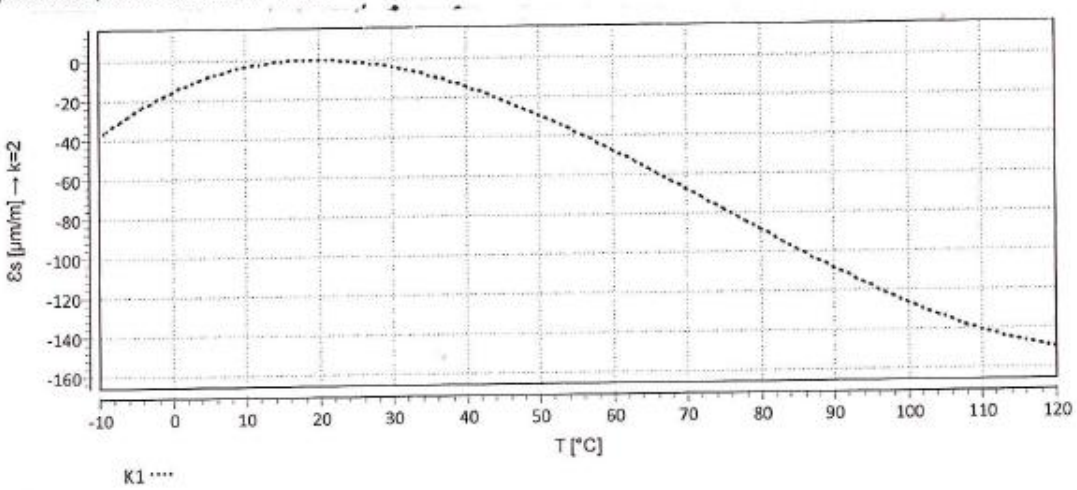

$$_{s}(T) = -15{,}48 + 1{,}72 * T - 5{,}15E\text{-}02 * T^{2} + 2{,}32E\text{-}04 * T^{3} \pm 0{,}30\ [\mu m/m/°C]$$

Alle technischen Daten nach OIML IR 62, bei Beachtung der abweichenden Toleranzangaben auch nach VDI/VDE 2635. Geben Sie bei Rückfragen bitte Bestellnummer und Herstellungs-Los an.

All specifications in accordance with OIML IR 62, also compliant with VDI/VDE 2635 if deviating tolerances are observed. In case of further inquiries please indicate order no. and batch number.

Toutes caractéristiques techniques selon OIML IR 62 et VDI/VDE 2635 pour les indications différentes de tolérance. Pour toutes questions, indiquer le no. de référence ainsi que le lot de fabrication.

Temperaturgang der Dehnungsmessstreifen bei Applikationen mit umseitig angegebenen Wärmeausdehnungskoeffizienten α. Gemessen bei kontinuierlicher Temperaturänderung.

Kennlinie 1: DMS ohne Anschlussbändchen.

Réponse en température des jauges d'extensométrie appliquées sur des matériaux dont les coefficients de dilatation termique α sont indiqués au verso. Mesurée au d'une variation continue de la température.

Courbe 1: Jauges sans pattes de raccordement.

The **temperature response** refers to strain gages bonded to materials with the coefficient of thermal expansion α given overleaf. Values are measured with continuous temperature variation.

Curve 1: Strain gages without leads.

Kopfdaten / Header / Titre

Overview of analysis in DewesoftX

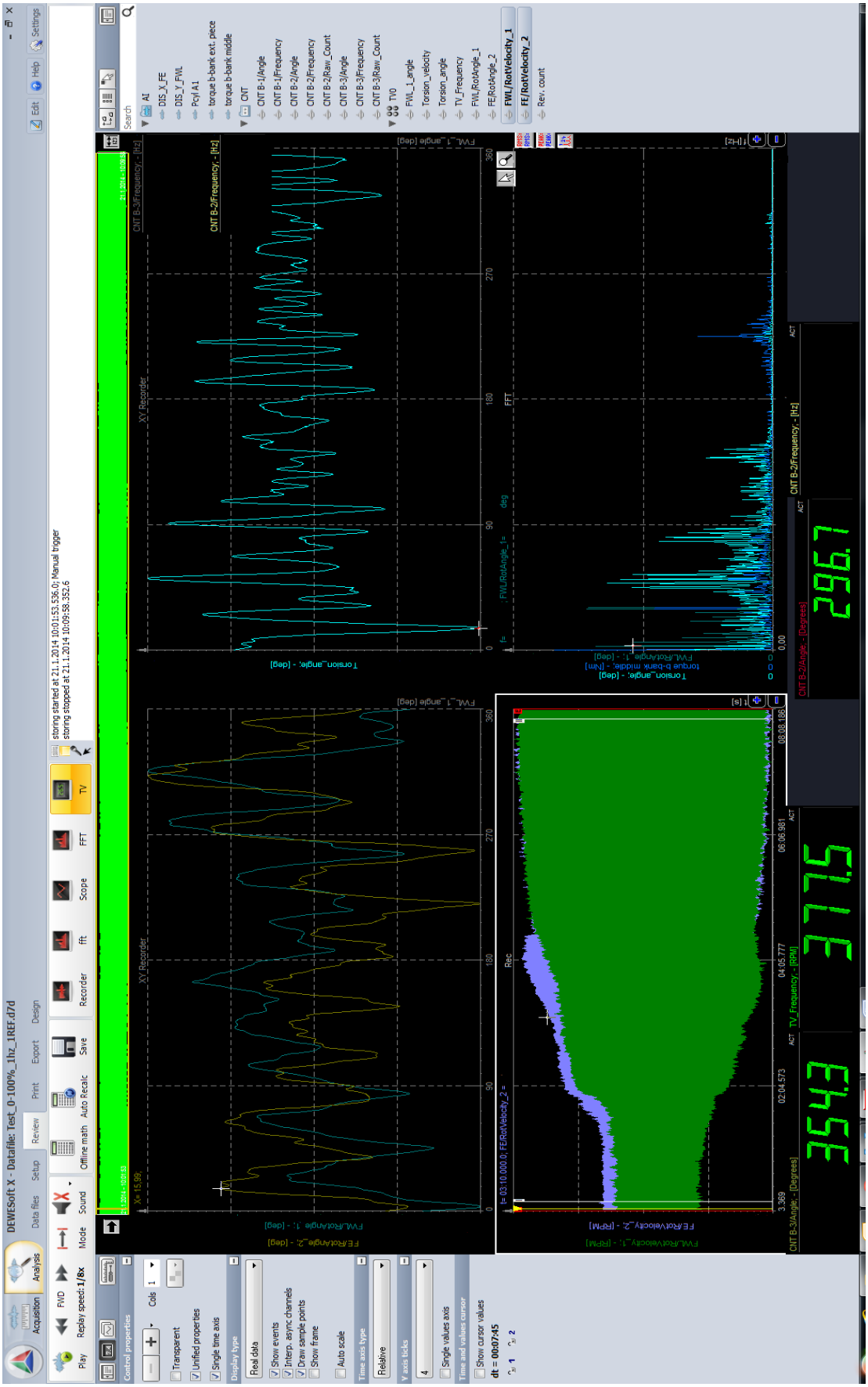

Appendix 7

3D waterfall of rotational angle at sweep measurement

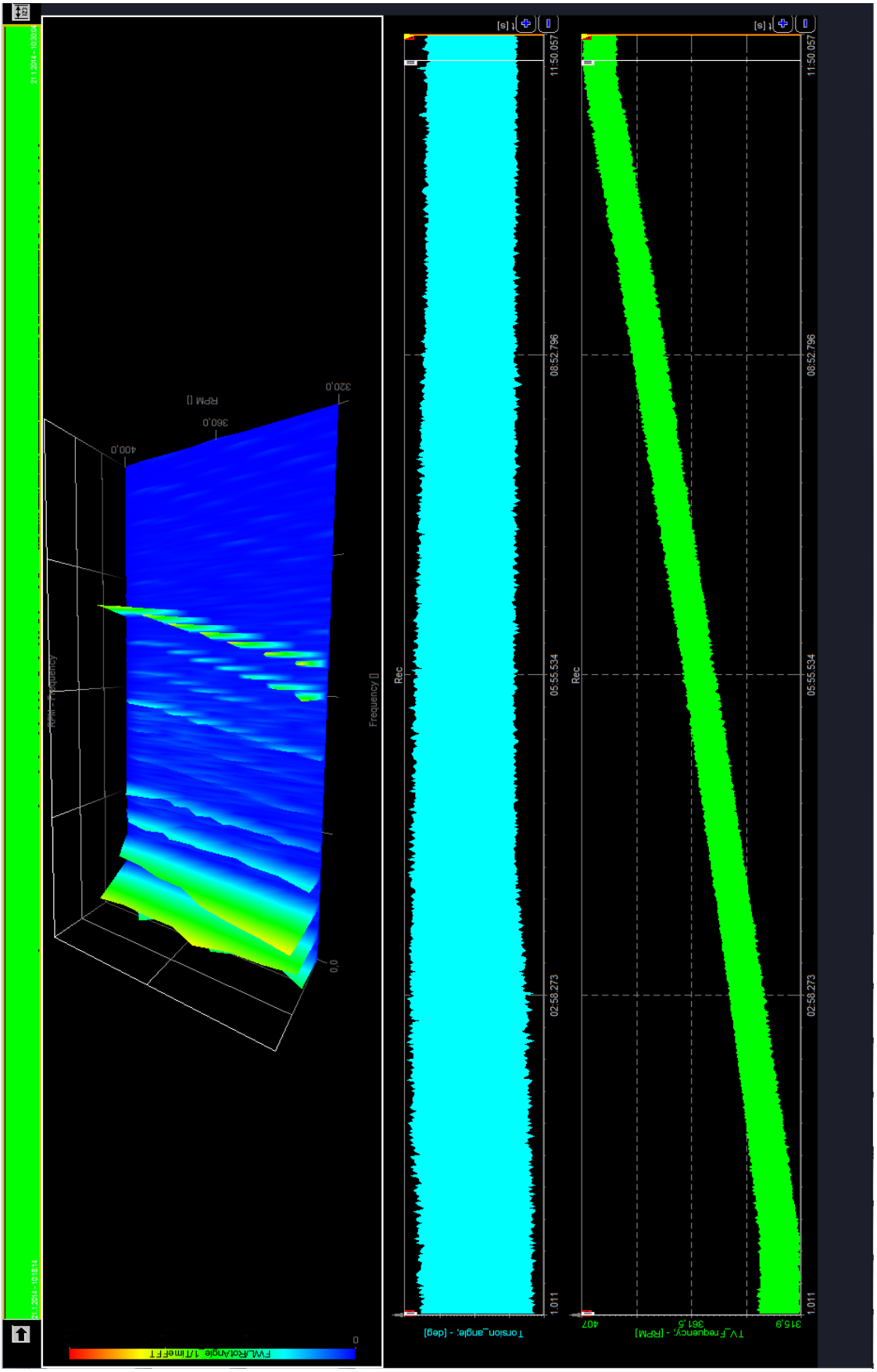

Appendix 8

3D waterfall of rotational angle, engine nominal speed to 0 RPM