KARELIA UNIVERSITY OF APPLIED SCIENCES
Degree Program in Design

Shane H. Allen

AN ENTIRELY SHAPE PROGRAMMABLE MATERIAL
A Design Process from Idea to Fruition

Thesis
April 2015

THESIS
April 2015
Degree Program in Design

Sirkkalantie 12A
FI-80200 JOENSUU
FINLAND

Author(s)
Shane H. Allen

Title
An Entirely Shape Programmable Material- A Design Process from Idea to Fruition

Abstract

The thesis presents an overview of my personal design process into an invention called Shape Programmable Material. The main method used in this process is the action based research process.

The text goes from a current stated problem into problem solving and idea generation, designing a solution and bringing it to life, to finally writing the patents in order for idea protection. The main objective is to show a possible process one can take from creating an idea and taking it along many steps (problems and solutions) in order to bring it into fruition.

After the product has been designed and set forth, the paper goes into the patent process and how I wrote my first patent for this particular patent.

The conclusion lays out the success of the thesis. Every design process is a little bit different, and different designs may require different processes. In this instance, this path has proven to be successful for this specific product development.

Language English	Pages 60 Appendices 6 Pages of Appendices 6

Keywords
Design process, idea generation, problem solving, business, IPR

CONTENTS

1 INTRODUCTION

The goal of this thesis is to show the method of using different research methods to take an inventive idea and bringing it to fruition. In my past four years at Karelia University I have chosen to step outside of the normal Design Program and pursue the path towards creating my own company around inventions of mine. Many product ideas have failed (even after being built, funded, and proven to work) and it is those failures which have pushed me onto the path I am currently on. This thesis will describe that path - creating what can be described as the world’s first three dimensionally shape programmable material. This thesis will show the informal thinking which I used in order to come to conclusions, move past issues, and solve problems which inevitably come through product development. The outcome from this process has proven positive and allowed me to continue into the development of my own company around this specific product. It will then finalize on the patenting process, which is something which must be seriously considered when taking an idea to the marketplace. The numerous claims and drawings are shown for this particular product, showing how I personally took this patent process into my own hands.

2 FRAMEWORK

2.1 Blind to the future

Customers do not always know what they want. The customer is not the designer, the engineer, or the creator. The customer only knows that they want something after it has been presented to them. This is a philosophy of mine that closely links to the way Apple runs their company with designer oriented product development. If one observes the past 50 years, no one would tell know then that we would all be using computers to connect people around the world via a worldwide connection of wires called the “internet”. Would people have wanted it though? Almost definitely. Even today it is impossible to predict the future, but those who try are the ones who will most likely create it.

2.2 Seeing past greatness

Another big hurdle for product design from an inventor/designer perspective is getting past what has already come. All the time I hear that “that is the best it’s going to be, it can’t get any better than that”. This is a very negative way to look at a product when one is set out to design it. It is imperative to mentally remove oneself from this box of “it gets no better” and place imagine a world where everything is improved. This is how one comes up with ideas, which can truly become game changers in whatever industry attacked.

2.3 The starting point

At this point, the thinking is that one can make things better always and to constantly think into the future on how those will work. Great. If all the goal is to make existing products better - high-five. What if the goal is to create something which no one has done before? Something, which is so far out that it’s Sci-Fi? How does one get an idea like that and where is the beginning for designing it? From my experience, it’s all about cramming as much information in your head on every subject you can, then letting go for a while, then cramming more, then again letting go - for sometimes even weeks on end. The brain works in mysterious ways but one thing it always is trying to do is create patterns, which make sense. In the relaxed state, the brain will slap things on top of each other and maybe, just maybe, something will click and you will have something that has not been created in the past.

3 THE DEVELOPMENT METHOD

The method utilized throughout this thesis is one which is called Action Based Research (Lewin 1946). This is the method of research which involves four different stages in each development. This approach usually starts with a plan. The plan lays out what the goal or end result will be at the end of the research. Then it moves into the action step that deals with testing the proposed path. After which is observation, seeing if that path is correct and working. And finally ends with reflecting (See Figure 1). Did this method work? What are the problems? Should this idea be thrown out, tweaked, or taken from a completely different perspective? Throughout the thesis this cycle of plan, action, observation, and reflection is used constantly on different aspects of the product development. This is the method which has allowed for the idea/product to go from idea to fruition.

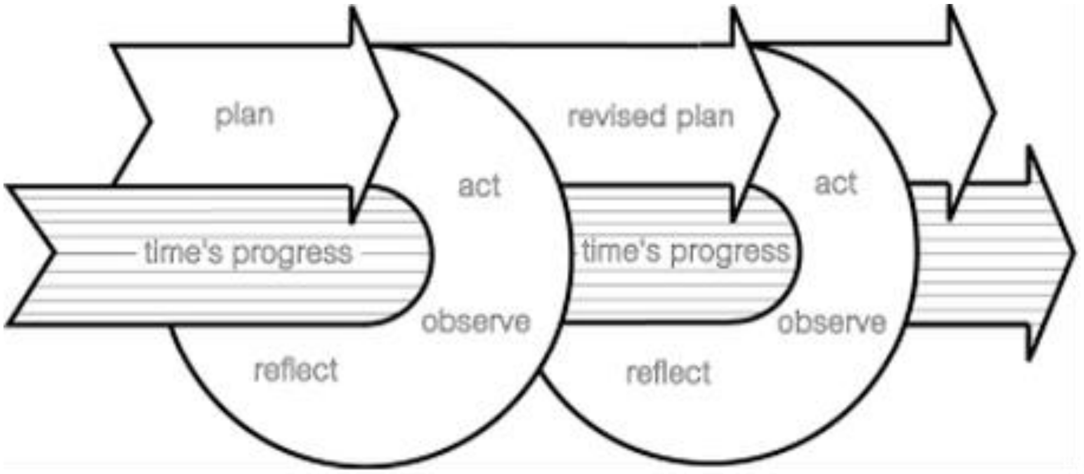

Action Based Research [Figure 1]

In addition to Action Based research, I personally use a variety of Phenomenological research methods – namely empirical, hermeneutic, heuristic methods. Starting with Empirical being the use of my past experiences to get to a goal and Heuristic and Hermeneutic where I place a personal challenge to create something which does not exist and to go past that, or as I mention "think outside the box", from what is currently applicable for today.

4 FOCUSING ON THE NOW

4.1 What angers users?

When you hear about a product, how it works, how it looks, or how it feels - what angers you about it? Sometimes being a designer means being overly pessimistic on everything seen, but keeping a positive head that everything can be fixed because nothing is permanent. For me personally, 3D Printing straight up pisses me off. Why? For one, it is bulky and ugly. Two, it makes novel plastic trinkets that no one past the age of five should ever want/need. Three, it is incredibly slow, taking hours upon hours to make anything. And four, its becoming increasingly famous and touted, as the “future tech” that everyone will want or *need* in the future.

No. I disagree, highly, and it angers me that no one else sees that. The future is not little plastic trinkets, which takes an hour or more to make, the future is about things being useful and blazingly fast. Basically, getting the future means not using a 3D Printer. It means using something new and amazing, something that can have the flexibility of a 3D printers’ ability to create different products over and over but with lightening fast speed.

4.2 Current manufacturing methods

Currently a product designer has only a few choices when it comes to prototyping or manufacturing a plastic product. For large scale manufacturing of plastic the best methods include injection molding, blow molding, and the like; they are incredibly fast, producing parts in seconds. For small-scale manufacturing these methods also work if money is no issue. Most choose 3D printers for small scale and prototyping needs though due to the low cost ability to see the semi-finalized product in reality quite quick, hours, for almost no cost.

4.3 Problems with current manufacturing methods

Both of these methods, Injection Molding and 3D Printing specifically, have their enormous drawbacks. Injection molding, while fast, is extremely expensive. Molds as large as a cars front bumper will cost over a million euro. A problem with this also is that if the design is incorrect or needs tweaking, one usually must purchase an entirely new mold in order to correct the issue. This is not a great method for small scale or beginner product designers who change concepts on the fly. Then comes the 3D printer, which is a cheap machine, roughly 1-10,000 euro for a decent machine. It can make multiple forms of plastic parts on the fly as required. However, it is slow in comparison to an injection-molding machine. While an injection-molding machine can make parts like a car’s front bumper, in a second, a 3D printer cannot. Currently BMW and other automotive manufacturers around the world are utilizing 3D printers to lower the cost of their design process, but bumpers can take a week or more to print. Another issue is that 3D printers have a limitation on size, so if printing a bumper on a standard sized 3D printer is needed then they must be printed in sections and then connected like pieces of a puzzle. The other option would be to have a custom 3D printer made to large size for specific needs. I see both having positives and negatives, however both flawed and not what I would describe as the future.

5 THE SOLUTION IMAGINED

So here I am, faced with two manufacturing methods which I believe are flawed, and seeing that the world is in need of a new method. I realize a market potential awaits if I can just figure out what is the future of manufacturing. This seems like a daunting task but the key is to start from the very beginning and understand what I want. I told myself I want a solution for manufacturing, or at least prototyping, which is fast, low cost, and can produce an unlimited number of different plastic parts without additional cost. Right off the bat I threw away the 3D printing solution, as it is too slow during operation to be of use, and speeding up the process is nearly impossible today. So, regarding this problem, I asked myself a couple of questions first.

- What is the current fastest method of manufacturing?
- What is the current leading method for manufacturing?

The answer came simple enough for both questions - Injection Molding. It is by far the absolute fastest method for manufacturing today. To the second question it was the obvious answer as well, as the entire world uses injection molding for plastic production today and has been since 1872 (Bryce 1999). So then I asked myself a couple of other questions.

- What is the flaw in injection molding that makes it expensive?
- What is the flaw in injection molding that makes it unable to produce unlimited product forms?

The answer, surprisingly for both is the mold itself. It is again incredibly expensive to produce a mold, which is normally made from solid aluminum. Even small objects such as a single cup can run over 10,000 euro per mold. This aluminum mold is also the biggest flaw as to why it cannot produce an unlimited number of different shaped parts. Once aluminum is milled for the plastic part you want, it cannot change it on the fly at all. So for example, if the goal is to make cups and then later it is decided, to switch the path and start making plates, it cannot be done. A new aluminum mold must be designed, ordered (at least 10,000 euro), made, shipped, and only then can a user stick it in an injection molding machine to start producing plates. This is a process which must be repeated every time different products are needed.

I have come to the realization that in order to solve the problems plaguing manufacturing and prototyping today, based on the widely used injection-molding machine, is to tackle the problem of the mold itself. This part needs a redesign.

6.0 DESIGN VISUALIZATION

So where do we go from here? The mold is a problem. It does not have the flexibility of creating numerous parts and it is way too expensive. This part came almost all of a sudden to me: we need a mold which is cheap and can literally change its shape on command. That would solve both problems and, if possible, could completely change the way things are manufactured today. So now is the point to start designing.

6.1 First attempt

After many sketches my first attempt at the idea was to create a mechanism which utilized thousands of actuator, controlled pins, each having the ability to be programmed into certain lengths, allowing for the creation of a mold which can change shapes. Much like the child’s play toy shown in Picture 1.

Child’s Pin Toy [Picture 1]

So I ordered two of those toys to serve as two sides of a mold and I got down to 3D development work onto how to create the movement for the pins. One thing that became clear was that these pins have to be either moved via hydraulic actuation or electric motors (See Figure 2). They have to come straight up, straight down, and every place in between. Then on top of the pins the idea is to place an elastic film, which would be the barrier between the pins and the plastic being molded.

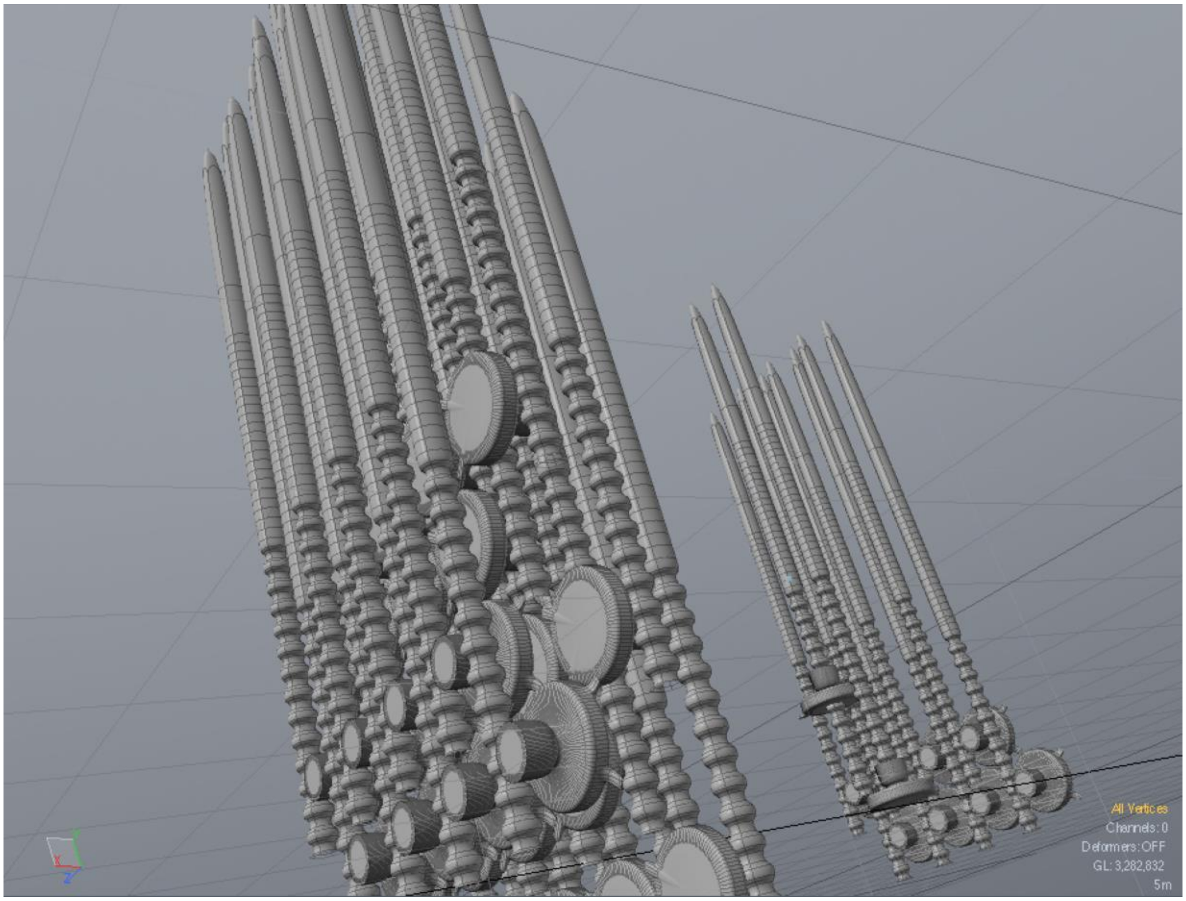

Actuated Pins Concept [Figure 2].

Problems arose soon. Getting the resolution of the mold to be at least somewhat decent meant extremely small motors or hydraulic actuators - ones smaller than the pins themselves. The reason for this is that if they are bigger than the pins, they will hit other pins. Alternatively if they are bigger than the pins, the can be spaced out but then the machine will lose resolution very fast.

Another issue came quickly as well. The actuators would need to be wired individually and powered individually. With thousands of pins moving this becomes a wiring nightmare, as well as adding even more to the bulk, which will hit other pins.

When the child’s toy arrived, we set up a few actuators and had the images running through the toy, changing shapes, but the resolution was so far away that we through the idea out. Interestingly enough, MIT came up with the same idea 2 years later and are getting lots of press with it today. It is a low-resolution table that allow for some shapes to pop out of the table. Overall dimensions are something around 3-4 ft with all actuators and wires. It is a dead end though, so no hard feelings; they can have it.

6.2 Additional applications found

While working on the pins attempt, the idea of other applications popped into my head. If I could create a object that can change shapes, it can be used for much more than just molds. It could be placed in TV’s for 3D TV, Advertising could pop out at the customer; programmable aerodynamics could be made for vehicles, as well as many other applications. This brought up the next requirement I set for myself - this material must be thin, as well as able to change into all different shapes. I added this to the list.

6.3 Second attempt

Ruling out the method for pushing up pins as the way, and understanding I wanted to create this to be as thin as possible, I looked into different methods. Upon searching for shape changing materials I came across shape memory alloy (Lagoudas 2008), a nickel and titanium alloy that can traditionally bend upon heat or electricity. Great, if I can have electricity tell this alloy to bend, then many of these together could possibly build shapes. The idea then hit me to create essentially “pixels”, like those found on an LED/LCD screen, where instead of changing colors they will change angles. So I laid out how this could be done (See Figure 3).

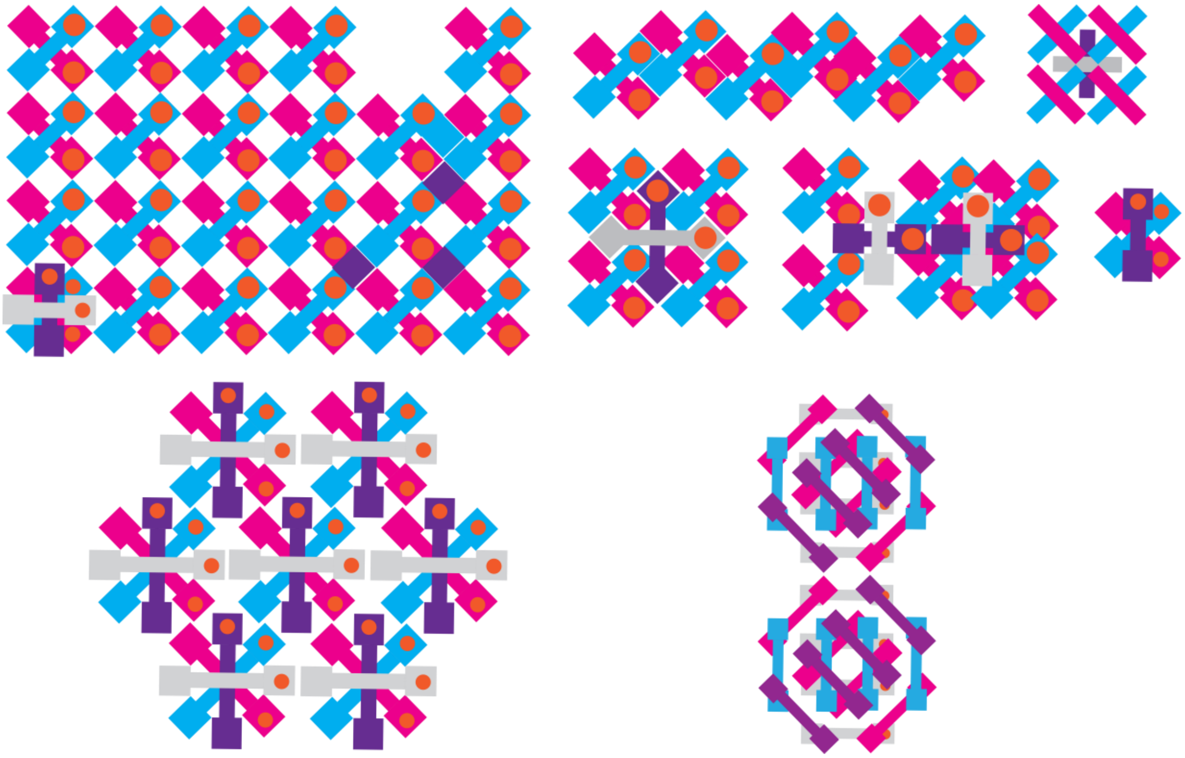

SMA Pattern Layout Concept [Figure 3]

It took a lot of designing around how to place these tiny pixels on a sheet. First of all, this was getting them setup in a way which compacts them as much as possible. This was hard enough, but then it got even harder when I had to figure out how to route power to each one and control their angles (See Figure 4).

Trace Schematic Concept [Figure 4]

This electrical controlling became a huge issue with how this was going to work. Software wise, controlling thousands of pixels and directing electricity to each on a needed command is not a problem. It is the circuit board routing which is the problem. Just as with the pins, this wiring would be a nightmare. Even with the circuit board separated from the moving sheet, each pixel will need a wire dangling off it to the circuit board, which would turn into a recipe for huge pains when something breaks or goes wrong.

After sitting back and pondering the situation, I looked into a way, which many things are controlled today, there had to be something else that works similarly. Surprisingly enough I was right: on LCD/LED screen each individual pixel must be controlled. What is the wiring behind those? Turns out it is quite simple (See Figure 5).

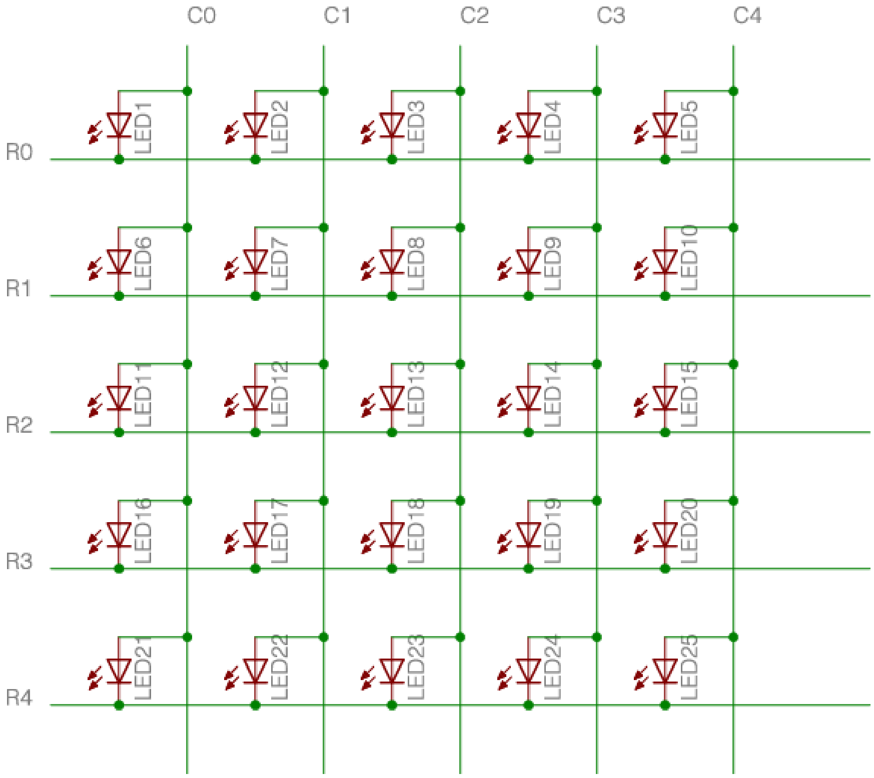

Multiplexing Basic Layout [Figure 5]

Using a method called multiplexing, the wiring is cut down from thousands of wires down to tens of wires. It works in a way which each row and column is led by a component called a transistor. These transistors are essentially gates which open and close their stream of electricity on command. When the need is for a single light pixel to turn on, simply open up that rows transistor, and then that column which allows the power to flow through the LED, to the ground, turning it on. When this switching is performed thousand times a second, you get images on a screen. In reality, screens are never fully on, they are usually flashed row by row. This is the reason you see lines when trying to film some television sets.

So if I would be able to control each “moving pixel” in this way, then wiring would be extremely easy and creating the circuits to control them are a breeze. Of course, with product development, one problem leads to another. With the electrical control out of the way there is now a new issue. How does one get this sheet of pixels to allow for a square to pop out of it? It seems like a simple enough shape but in reality it is extremely hard physically. You have to imagine it from the perspective of placing a tablecloth on top of a table, where the tablecloth is the pixel sheet (See Picture 2).

Creased Tablecloth Issue [Picture 2]

What happens is at the corners of the table there arises the problem of creasing. It's not possible to physically force a tablecloth to perfectly form a non-creased form of the square table. This is a physics problem and a huge roadblock in development, how can does one change what is physically impossible? This took many days of staring at a cube on my desk, with a napkin on top, before I came up with the solution.

Stepping back from a sheet idea, and just thinking about the problem at hand, is what allowed this solution to evolve. When looking at a cube, from one angle and drawing a line directly up, over, and down the other side, this covers three sides of the cube (side1, top, side 2). And if the cube is turned and the lines are drawn again in the same way, up, over, and down the other side, the whole top of the cube is now covered. So in actuality the material has now formed to a cube.

How does this help? Going with the lines scenario, if I can create the lines which are made out of these shape-changing pixels, and then it could form right back to flat afterwards. Stepping back from thinking of a sheet as a “sheet”, flat and creasing like the tablecloth, and thinking instead of each red line on the tablecloth as separate strips, there is a solution. With each strip changing shape there is now possibility to have any shape pop from flat, almost impossibly (See Figure 6).

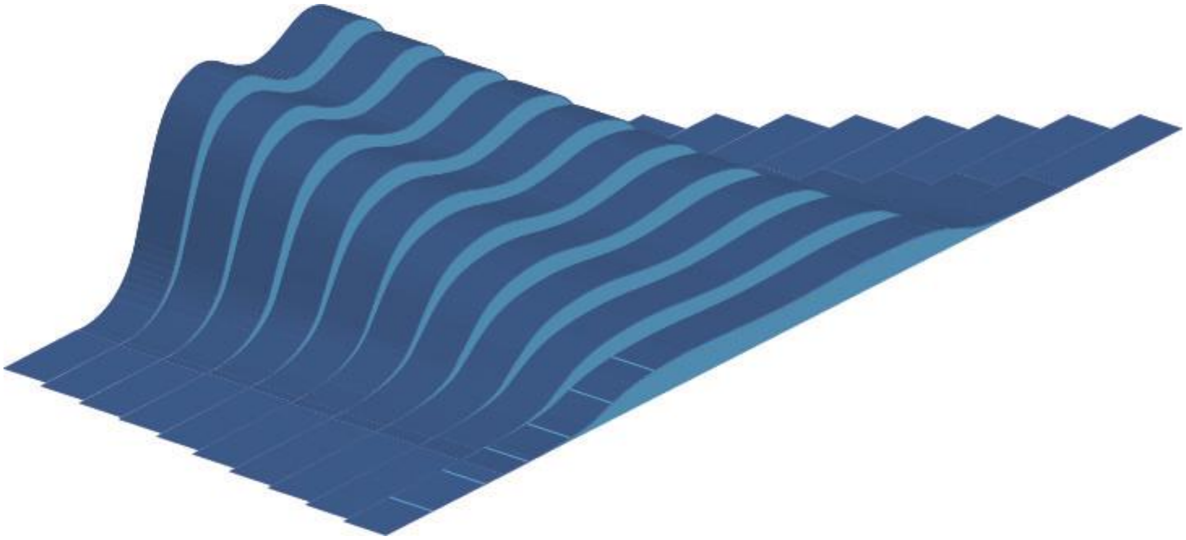

Programmable Lines Concept [Figure 6]

Each strip is separate from the strip next to it. This free movement, while being stuck to its own row/column, allows for the technique to work. This brings on more problems again. When these strips form up into the shape commanded, they will pull along with them the outside of the whole strip sheet. This is another physical problem, which must be addressed.

The solution came just thinking of the concept more. If securing all edges of the strips down on its edges, then the pixels cannot move the sheet and now the sheet stays flat. However, if only one end of the strip to be secured, and the other to have a flexible connection to the outer secured part of the sheet, then this can form shapes without loosing edge material (See Figure 7).

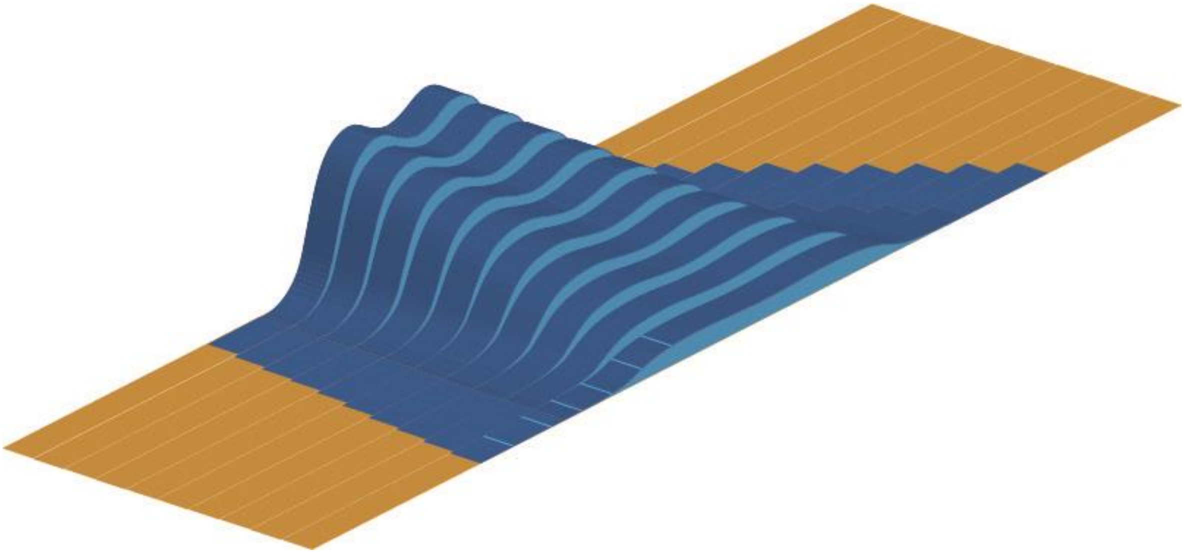

Lines Concept with Flexible Edge [Figure 7]

All seemingly physical problems solved, now it is time to get down to making it happen. Starting with the SMA material and researching extremely in depth to it, there are some issues. It does not allow for shape changes that can be precise or long lasting. The nature of the material, when programmed into an angle form, will lose its memory to form that angle after only a few tries. This is no good.

6.4 Third attempt

Everything is solved; it is just down to the SMA material which is the issue. It does not last long enough or perform precise enough. Stepping back again and just researching other materials I came into hearing about an SMA which shrinks upon heat/electricity input. It does not do what I want, but it does have proven over 1,000,000 cycles of precision shrinking. This was intriguing to me and I then started to design around how to make it form angles when shrunk (See Figure 8).

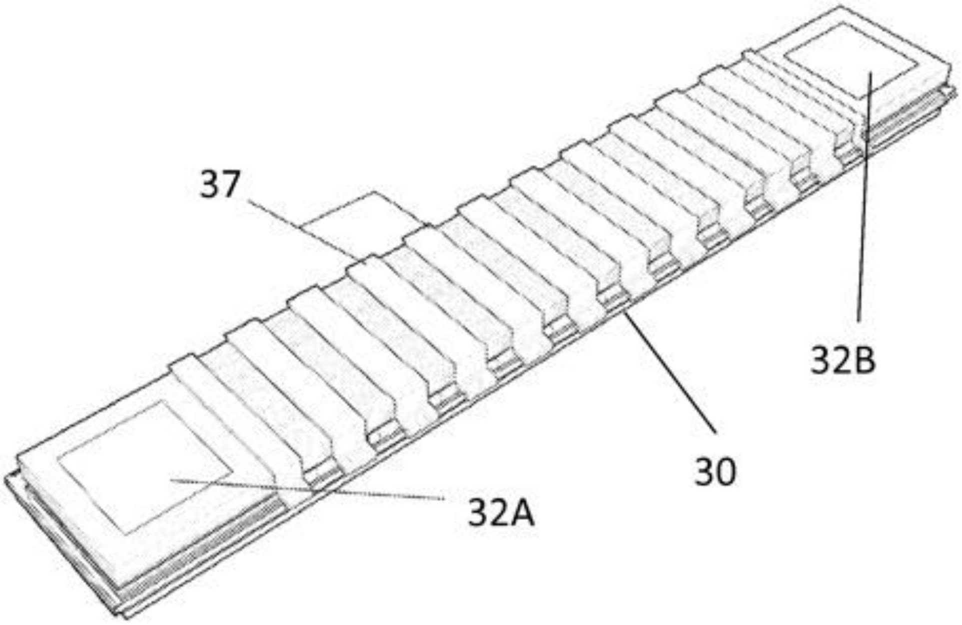

Complete Segment Concept [Figure 8]

And that is where the creation of the “segment” came to light. This is a method I created which allows a shrinking SMA to bend into angles. By fixing the ends of the SMA, and then placing a skeleton on top of it, which holds it down to the substrate, it completely forced the material to form angles. Upon real world testing, this proved to work, and work perfectly (See Figure 9).

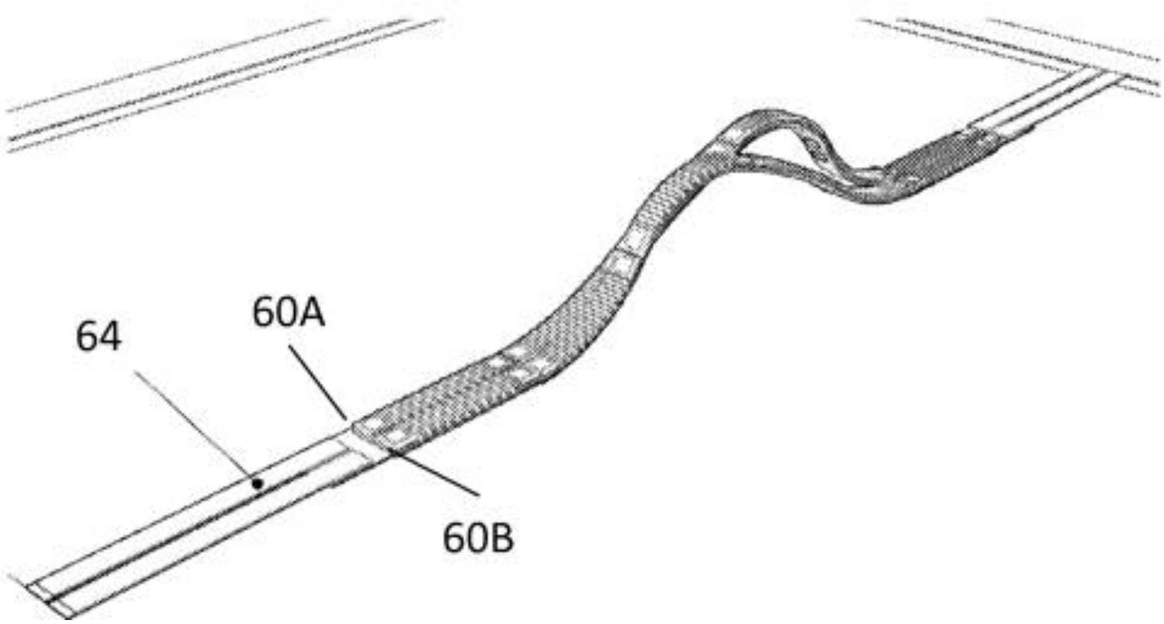

Fully Programmable Line with Skeleton Concept [Figure 9]

We now have everything figured out. The physical aspects of how the sheet should be made as well as the individual pixels/segments that will form precisely into the angles needed to build up the forms we need.

7 PROTOTYPING

With the idea settled of creating strips that can form into shapes through electrical input, the next step was to start prototyping the solution. I created many segments which where connected end to end and I took on a partner in the business who had software knowledge in order to program it to move the way we want. I was granted 5,000 euro from DRAFT student funding and I also won a business idea competition in Joensuu and was awarded 10,000 euro. This money went into patents, which will be shown further on, and prototyping. I went to 3K Tehdas in Savonlinna and they created the circuit board to my specifications. We integrate our software and we had a physical realization that our method really works. We now are able to have the line bend up and down in any a different shapes wanted (See Picture 3).

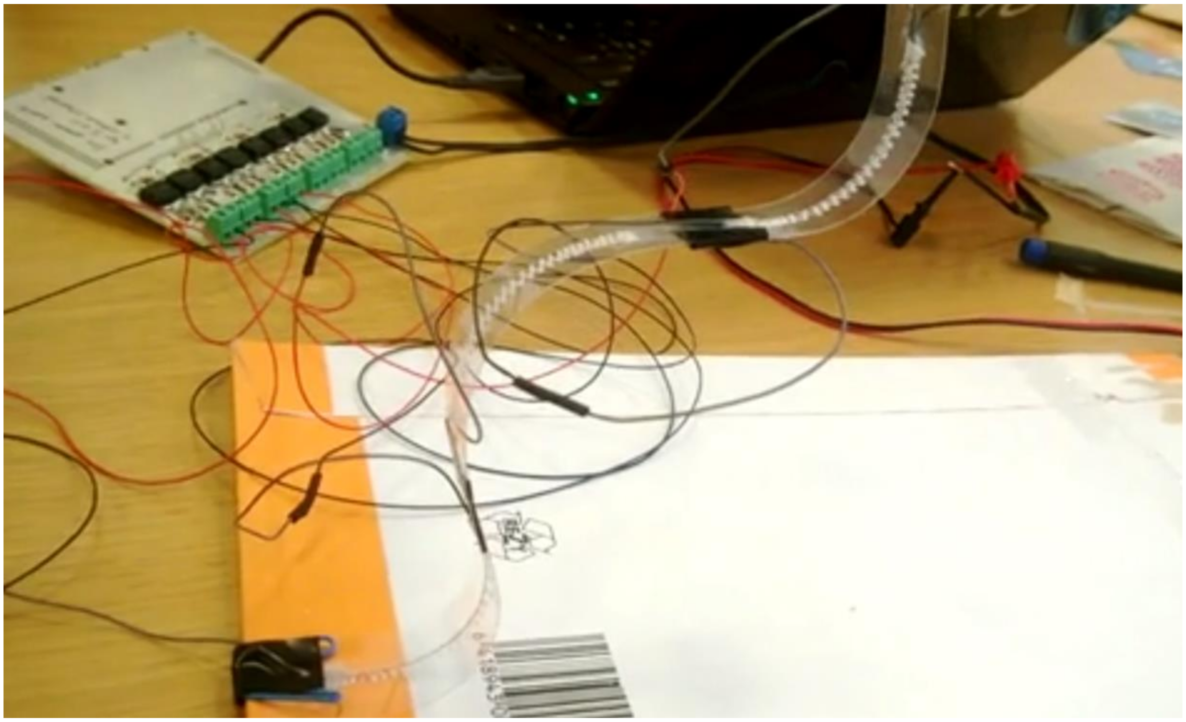

Programmable Line Prototype [Picture 3]

This was in 2014. Development has gone even further but nothing since can be shown publicly, however, the method had proven to continue to work and we are moving forward. This whole process, from idea to fruition, took nearly a year of work but it is working just as expected. We raised money from Ari Lahti, a famous investor from the Leijonan Luola (Sharks Tank) TV show, as well as the Finnish government. We have clients we are developing solutions for currently and we have and are pushing our technology to the next level.

8 PATENT

Once all of the product design is figured out and settled, now is the time to write it all down in the most vague way possible. The process involved in this is quite time consuming work. This vague writing has the purpose, at least attempt, to cover everything that has been developed as well as other possible things in the future – protecting the idea from being easily stolen with small changes. The patent is consisting mainly of the summary of the invention and the claims which that are being aimed to protect. The patent application information below came back recently from the Finnish Patent Office that all claims are fully patentable. Since this I have added more claims (not shown) and applied for a US Highway request, to speed up a US decision, as well for a PCT filing to go internationally with the patent. Images referenced are found in the appendices section. The patent entails most the following (Allen 2013).

8.1 General Patent Info

The invention relates to a reprogrammable shape change sheet, a method of shaping a surface and a reprogrammable injection-molding machine. The sheet comprises a plurality of muscle elements capable of changing shape upon electric stimulation, the elements being arranged in an array to define a surface. According to the invention, the muscle elements comprise two muscle material layers capable of changing shape upon electric stimulation and a flexible wiring layer sandwiched between the muscle material layers, the wiring layer being electrically connected to said muscle material layers for delivering electric stimulation signals to the muscle material layers for changing the shape of the muscle elements and further the topology of the surface. The invention provides a new shape change sheet structure, which can be made thin, accurate and durable for various uses.

8.2 Description of Patent

8.2.1 Field of the invention

The invention relates to programmable shape changing structures. In particular, the invention relates to a novel kind of structure achievable by utilizing for example shape memory alloys (SMA). The invention produces a novel kind of shape changing sheet or film, a method of shaping a surface and various uses for the sheet.

8.2.2 Background of the invention

Shape memory alloys (SMAs) have been used in many applications to deform objects for particular purposes. For example, US 2001/021290 discloses an omnidirectional flex-type shape memory alloy actuator for omnidirectional flexing of wire-like structures or capillary tubes when connected to driving elements. The actuator can be used for deforming optical fibers, for example.

WO 94/19051 discloses a spatially distributed SMA film, which can be used around a catheter tube, for example, in combination with a very large-scale integrated circuit to achieve a bendable structure. Like the one discussed above, this design is also suitable for shaping (bending) tubular structures.

US 2011/041641 discloses a deformable robotic surface that has a plurality of control points, a plurality of rigid connectors extending between the control points, and a covering extending over the plurality of control points. The control points are moveable relative to each other. Movement of the control points relative to each other causes a corresponding movement of the covering and a corresponding movement of the control point connectors. The document also discloses the use of deformable materials as a replacement for rigid connectors between the control points. However, even in such variation, the upward and downward movement of the surface is achieved using extendable tubes below the connector network and large control points. Such a structure can potentially make versatile shapes of surfaces possible but results in a thick and complex structure.

U.S. Pat. No. 8,057,206 discloses a reconfigurable tooling surface relying on a similar principle with a plurality of actuators beneath a variable stiffness covering. The surface, when reshaped using the actuator columns in a soft state, can be used to facilitate a resin molding process in prototyping applications, for example. Like in US 2001/041641, the actuators are mechanical and have a very limited mechanical working range, which results in a complex structure with very tight constraints as regards possible shapes of the surface formed.

U.S. Pat. No. 6,474,065 takes another approach. It discloses a multijunction thermoelectric actuator utilizing a plurality of Peltier elements in connection with alternating strips of electrically conducting dissimilar materials in a grid configuration such that a sheet is formed. The sheet is deformable as a whole towards either one or another side thereof by applying electric power across the sheet, since one of the surfaces heats up and the other one cools down.

U.S. Pat. No. 6,133,547 on the other hand discloses a unitary sheet of shape memory alloy and a distributed activation system comprising grid of heating elements for locally heating the SMA sheet. Such structure has also a relatively limited freedom of out-of-plane motion and suffers from creasing if bent to two orthogonal dimensions at one location.

In summary, the shape change structures discussed above are either specifically designed for bending tubular structures or, if capable of forming non-tubular surfaces with a desired topology, are very complex and/or limited in surface shape. They are therefore not well suitable for all applications, including prototyping and manufacturing, for example.

Currently, the most growing method in prototyping is 3D printing. This is a technology that uses a movable head, which extrudes molten plastic onto a sheet, in layers. These layers slowly build up after many thousands of passes, from bottom to top, to create a final prototype/product. This technology of 3D printing has many advantages. It is relatively cheap to use and to acquire. A 3D printer can print any object that a user designs and they also allow an engineer or designer the ability to manufacture their prototype product in house, which drastically improves final product launching by cutting time needed to go from manufacturer to them, eliminating the middle man. They can simply print out the product, hold it in their hands, decide on changes or if it is good, then proceed to get a real mold made which will produce the sellable product.

While 3D printing has many advantages it also has some disadvantages that are inherent to its design. The major one is that it takes a very long time to print. Something as small as a computer mouse can take many hours for a decent quality print. For something as big as a car's bumper, it can take many days up to even a week. Since a 3D printer is reliant upon stepper motors (for X, Y, and Z movement) and the cooling of the molten plastic before it can be printed on, it leaves a large flaw which will make it nearly impossible to speed up in the future. In other-words, 3D printing will most likely always be a slow process.

Another disadvantage of 3D printing is that it is not suitable for a final product. Even if sped up it can not compare in speed to an injection molding machine, which can produce full made plastic parts in seconds. Injection molding is the major manufacturing method of plastic parts currently. It uses two or more pieces of metal, which have an accurate image CNC (computer numerical control) carved in to them. These pieces of metal are put together and then molten plastic is forced into a mold formed by them. Once full of plastic, the mold is opened and the new plastic object is released.

Although the injection-molding machine is super fast and accurate, it also has big disadvantages. A major disadvantage is that it is very costly. To have a small mold made can cost a few thousand euro or more. To have a car bumper mold made can cost over one million euro. These molds cannot be used for anything else besides the purpose the were made for either. Also, to have one of these molds made for a product can take several weeks or even months. Additionally, if the mold is incorrect, the entire mold needs to be redone, requiring even more money and time.

Thus, there is a need for novel shape change structures for prototyping and manufacturing applications, for example, to form a mold section with easily variable shape.

There is also a need for surface structures with more flexibly variable shape to be used in many other applications besides prototyping.

8.2.3 Summary of the invention

It is an aim of the invention to provide a novel shape change structure solving at least part of the abovementioned problems.

A particular aim is to provide a sheet-form surface, which can be flexibly shaped to predefined topologies using electronic control.

A further aim is to provide an injection-molding machine, which can be easily reprogrammed to produce different object shapes.

One aim of the invention is to produce a method of producing a surface with the ability to programmable physically into a desired topology.

The invention is based on providing a programmable sheet which can change its topology, i.e., form to a desired surface shape, with the aid of a plurality of muscle elements arranged in an array. Each of the muscle elements is connected to at least one other muscle element such that they together form a two-dimensional, typically initially planar grid defining a surface, which, upon the shaping of individual elements by electrical stimulation, takes the desired form. The muscle elements preferably have a sandwich structure where a wiring layer, such as a flexible printed circuit board, remains between two layers of shape memory material (SMM) giving the self-shaping capacity to the muscle material. The electric stimulation signals can be delivered individually to the muscle elements via the wiring layer to adjust the shape of each element precisely.

More specifically, the invention is characterized by what is stated in the independent claims (Section 8.4).

The sheet may be covered with an elastomer film, which encapsulates the array of muscle elements, which are each programmable to certain shapes. To illustrate how the sheet could be used, a user can first create a 3D model of an object and import it into a sheet control computer program. The program is capable of taking the outside dimensions of the 3D model and providing control signals for the sheet. Then, each of the muscle elements of the sheet bend according to the control signals directed to that element. Once all elements have been programmed, the whole sheet has formed into the desired shape. In an injection molding application, the process can be continued by injecting plastic into a mold partly formed by the shaped sheet like a standard injection molder and a plastic object corresponding to the 3D model is made.

The muscle elements of the sheet are like pixels in a digital display. Every muscle element (pixel) has its own ability to change shape (color) based on the digital 3D model (digital image) that it should reproduce.

The invention has considerable advantages. First, the sheet is fully shape programmable, i.e., it is able to shape to any programmed shape. The sheet can have high out-of-plane dislocation and therefore take various forms due to its element structure. The sandwich structure with two muscle material layers in each element reinforces the structure and the actuating circuit layer remains well shielded between the muscle material layers. The structure is also symmetrical in the thickness direction.

The sheet may have different curvature at different locations to allow for individual control of muscle elements.

The disclosed structure provides high precision and a very long lifetime, even millions of repeatable precise shapes, provided that shape memory alloy is used as the muscle material. This is because other materials are not subjected to high stresses but they only follow the shape of the muscle material.

The sheet can be manufactured very thin, with a thickness less than 1 mm being completely realistic. The element structure makes it possible to make arrays from muscle element strips, which provide a great degree of freedom of movement and avoid the problems of creasing.

Shape memory alloys allow a shaping precision down to the nano-scale for individual muscle elements. This results in an extremely precise shape forming of the whole sheet.

For example, applied in injection molding the present shape change sheet can be used to define part of the mold, which is then easily reprogrammable in just seconds to the desired shape. After taking the programmed shape, it molds injected plastic into that shape, and in seconds it pops out the required plastic object. The next object may be of the same, slightly different or a completely different shape. There is a huge potential in prototyping and quite possibly manufacturing with this technique. This method is quick, flexible, and inexpensive. The sheet can be made smooth and rigid, such that the quality of resulting objects is close to or the same as in conventional injection molding with prefabricated molds.

Selected embodiments of the invention are the subject of dependent claims.

The reprogrammable shape change sheet comprises a plurality of muscle elements arranged in an array and being capable of changing shape upon electric stimulation. The array of elements defines a surface, which initially is typically flat (planar) but changes upon electric stimulation. Each of the muscle elements comprises a flexible circuit board sandwiched between two muscle material layers capable of bending upon electric stimulation. The flexible circuit board comprises electrical conductors electrically connected to the muscle material layers for delivering electric stimulation signals to the muscle material layers for changing the overall shape of the surface through bending of individual elements.

The term “surface” (of the sheet) is herein used to describe a mesh surface formed by the faces of the individual elements and spanning segments connecting adjacent element faces to each other. In other words, any potential grooves or gaps between the muscle elements or muscle material layers are not taken into account. The sheet may even contain openings between the elements, although in a finished product, they are typically covered by a surface layer, as will be described below in more detail.

The surface defined by the elements is essentially a planar surface when the elements are in a non-stimulated state, i.e. in their initial state. In a stimulated state, the surface may be curved towards one or the other side of the sheet, or locally to both sides.

The resulting sheet is self-supporting, i.e. does not need external mechanical support structures in order to maintain its programmed shape.

The muscle material layers comprise shape memory material (SMM) layers, such as a shape memory alloy (SMA) layers. Common SMA materials include copper-aluminum-nickel and nickel-titanium (NiTi). The material may exhibit a one-way memory effect or a two-way memory effect.

The actuation of the shape change of the muscle material layers may occur through

Joule heating (resistive heating) using electric stimulation signals such as current pulses through the circuitry between the layers, whereby no additional components are needed. There may, however, be provided heating or cooling components which are driven by the electric stimulation signals and transfer the desired temperature to the memory material.

The conductors in the circuit layer are capable of providing the electrical signals individually for said plurality of muscle elements. That is, each element may have a different temperature and therefore a different shape. The muscle material layers of different sides of the circuit layer are, however, preferably provided with the same stimulation signal and assembled such that the shape change occurs in the same direction and manner. Thus, each element is “powered” by co-operating “muscles”.

The electrical conductors may be arranged so as to allow de-multiplexing of individual signals, preferably of variable pulse width, to said muscle elements to program the sheet. De-multiplexing is beneficial, since it reduces the required wiring to a minimum but still allows for fast programming of the sheet.

The two-dimensional muscle element array is formed by muscle element strips placed next to each other. Each strip comprises a plurality of muscle elements connected successively in a first direction, which preferably coincides with one of the main axes of the elements, typically the length axis in the case of elongated rectangular elements. There are provided a plurality of strips arranged side-by-side, i.e., successively in a second direction perpendicular to said first direction. In a further embodiment, the muscle elements of different strips are mechanically uncoupled by any rigid connecting means so as to allow deformation of the strips independently of each other. This embodiment allows for shaping of each individual strip independently of the neighboring strip (a potential flexible surface material covering all elements and therefore necessarily coupling the elements in the second direction too is neglected here).

There is provided a rigid supporting structure, i.e., frame, to which the elements or element strips are connected. Preferably the strips are connected at both ends thereof to the rigid supporting structure by flexible, preferably elastic connectors. The connectors hold the sheet in place while allowing the individual elements and strips to take the programmed shape. Electric wiring to the elements may be provided through conducting material arranged on or into said connectors.

The muscle material layers are electrically connected to the electric conductors of the flexible circuit board using flexible connecting means, such as with conductive adhesive, electroplating or clipping. Flexible connecting is of importance to ensure that the electrical connection to the muscle material remains good even after several shape changes. Rigid connecting, such as soldering, may result in the wear and breaking of the connection at the interface zone between the circuit board and the muscle material.

There are provided a plurality of skeleton elements adapted to support the sandwich structure of the muscle elements by holding the muscle material layers and the flexible circuit board together. The skeleton elements are preferably elongated clips extending perpendicularly to the bending direction of the muscle material layers. There may be a plurality of skeleton elements spaced from each other on each muscle element. Such a skeleton system improves the shaping precision and durability of the sheet.

There are provided means for preventing heat flux to the muscle material layers from the outside of the sheet and/or for actively cooling the muscle elements. Such means may comprise e.g. a thermal insulation layer and/or a fluid circulation system provided on one or both sides of the muscle elements. Such arrangement may be beneficial in some embodiments, where the sheet is subjected to varying temperatures, such as in injection molding.

There are provided two layers of muscle elements arranged on top of each other and in different directions. Thus, the sheet actually comprises two sub-sheets. The term “different directions” herein means that the characteristic bending or deformation directions of the elements aligned with each other in different sheets are not the same. According to a preferred embodiment, the sub-sheets comprise oriented elements having a programmed bending direction and are essentially similar but placed in 90 degrees angle with respect to each other, as concerns the orientation of the elements. Such sheet allows for equally diverse and smooth shapes irrespective of the direction on the sheet surface.

There is provided a unitary flexible material layer covering the individual muscle elements on at least one side of the muscle elements. There may be such layer on both sides of the sheet. The covering layer smoothens the sheet surface, since there may initially be ridges and/or grooves due to spacings between the muscle elements and/or muscle material layers and/or the potential skeleton system. The properties of the covering layer are chosen to allow for shaping of the sheet (i.e. small mechanical stiffness/rigidity compared to the internal deforming forces of the sheet provided by of the muscle elements) but still providing a surface stiff and stable enough for the particular purpose of use of the sheet (i.e. mechanical stiffness/rigidity high compared with the external forces exerted on the sheet). The covering material may be e.g. rubber or other polymer material.

Besides smoothening, the covering layer or layers reinforce the sheet structure. The covering layer may be attached to the muscle elements and/or the wiring layer and/or the covering layer on the other side of the sheet using flexible adhesive, for example.

The starting shape of a covered sheet is preferably completely flat and it looks like a piece of the covering material. When programmed the sheet pops up into a shape.

The sheet comprises an electrical control unit or an electrical connector for a control unit for providing the electric signals to the muscle elements for shaping the shape change sheet to the desired form. The control unit or the connector is preferably capable of providing pulsed de-multiplexing signal to the array of muscle elements.

The complete sheet, including any potential covering layers, has a thickness of 5 mm or less, in particular 2 mm or less, preferably 1 mm or less. The thickness can be reduced down to nano-scale, i.e., to dimensions below 1 µm.

The muscle elements may have a rectangular in-plane footprint, typically with an in-plane aspect ratio varying from 1:1 (square) to 20:1 (wire-like). Preferably, the elements are elongated, having an aspect ratio of at least 3:1.

The largest dimension of the individual elements may be e.g. 5 cm. Typically, all the elements in a single sheet are of the same size, but there may also be elements of different sizes. There may also be non-deformable elements within a sheet, replacing one or more muscle elements of the array.

There is also provided a shape change element for use in a reprogrammable shape change sheet, the element comprising a wiring layer sandwiched between to layers of shape memory material and the wiring layer comprising electrical conductor means for providing electric stimulation current to the memory material layers for initiating shape change of the element.

Independent from the particularly advantageous muscle element structure described above, there is also provided a shape change sheet comprising muscle elements of the above or some other kind, the muscle element being capable of changing shape upon stimulation and wherein the muscle elements are arranged as strips each comprising a plurality of muscle elements connected successively in a first direction, and there are provided a plurality of strips arranged successively in a second direction perpendicular to said first direction. The strips contain electrical wiring for delivering electronic stimulation signals to the muscle elements for changing the shape of the element and further the general topology of the sheet formed by the element strips. This aspect of the invention is compatible with other embodiments of the invention and may be prosecuted in a divisional application, for example.

The present method of producing a surface with a predefined shape comprises providing a reprogrammable shape change sheet for example according to one of the embodiments described above and delivering electric stimulation signals according to a signaling scheme corresponding to said predefined shape to said muscle elements to change the shape of the individual muscle elements. As a consequence, the surface defined by the muscle elements takes the predefined shape.

There is provided a claim programmable injection molding machine comprising a mold cavity and means for injecting moldable material to the mold cavity for forming an object whose shape corresponds to internal shape of the mold cavity. According to the invention, at least part of the mold cavity is defined by a reprogrammable shape change sheet comprising a plurality of muscle elements each comprising a flexible circuit board sandwiched between two muscle material layers capable of changing shape upon electric stimulation and being arranged to define a surface, and wherein the flexible circuit board comprises electrical conductors electrically connected to said muscle material layers for delivering stimulation electric signals individually to the muscle elements for changing the shape of the surface.

The machine may comprise means for storing a 3D model of at least part of the object in computer readable form and means delivering electric stimulation signals to the reprogrammable shape change sheet in order to shape the sheet to correspond with the shape of the 3D model.

The term “muscle material” refers to a unitary piece of material having the capability of reversibly changing shape in suitable conditions without external mechanical force directed to the material. Such materials include shape memory materials (SMMs) of different kinds, in particular shape memory alloys (SMAs), but also shape memory polymers (SMPs) may be used.

The term “muscle element” refers to any element capable of internally producing a mechanical force which causes the element to change its shape upon suitable stimulus. A muscle element may consist of multiple parts, such as layers, as described below in more detail. A muscle element typically comprises one or more separate units of muscle material. The required stimulus for the muscle element and muscle material is primarily electric, but a converting element, such as a heating or cooling element or an electromagnet can be used within the element to convert electric energy into some other form for the muscle material, if necessary.

The term “wiring layer” means a structure which is capable of delivering an electrical stimulus to the muscle material for initiating its shape change. The “wiring layer” may also serve so as to mechanically and/or electrically and/or thermally isolate layers of muscle material from each other. In a simple form, a wiring layer comprises a flexible printed circuit board (PCB) known per se, and having suitable copper wirings on one or both sides thereof and/or in an internal layer thereof for delivering the stimulus signals from the outside of the sheet into the elements of sheet and contact pads on one or both surfaces thereof for transferring the signals to the muscle material.

Next, embodiments, advantages and further uses of the invention are described in more detail with reference to the attached drawings.

8.2.4 Brief Description of the Embodiments

With reference to Figure 1, a muscle element usable in a reprogrammable shape change sheet according to one embodiment of the invention comprises two planar rectangular muscle material layers 11A, 11B and a wiring layer 15 arranged between the muscle material layers 11A, 11B. The wiring layer 15 comprises electrical contact pads 16A, 16B on both ends thereof and on both sides thereof. The muscle material layers comprise apertures 12A, 12B on corresponding locations on ends thereof. The apertures 12A, 12B are beveled towards the outer surfaces so that conductive adhesive polymer, for example, may be used to effectively bind and connect the muscle material layers to the contact pads 16A, 16B.

Figure 2 shows a muscle element 10 assembled. The middle portion of the muscle element on both sides thereof is preferably left without adhesive so that the structure is as a whole as flexible as possible. The end portions are bound using non-rigid means to allow for bending of the structure without breaking the electrical connections. It is also advantageous that the ohmic programming current delivered via the wiring layer 15 and driven through the muscle material layers flows through the whole layers 11A and 11B, whereby heat is evenly generated.

Provided that the muscle material layers are suitably preprogrammed memory materials, 10 is able to bend forwards and backwards.

The wiring layer may be formed of a flexible printed circuit board (PCB) material known per se. Flexible PCBs are used for making electrical connections across hinges or other movable parts of electronic devices. Alternatively, and especially in the particular case where the muscle material exhibits contraction instead or in addition to bending, elastic material containing elastic conductive wirings can be used. In both cases, the wiring layer is preferably polymeric. The conductive paths and contact pads on the wiring layer may be made from metal, such as copper or conductive polymer or ink, to mention some examples.

Not considering the potential covering layers or temperature control means provided onto the sheet, the wiring layer may be the only structure mechanically connecting neighboring muscle elements to each other. On one hand, there may be provided one or more elastic reinforcing members to ensure the durability and rigidity of the sheet.

Muscle material is preferably connected to leads or connection pads on the PCB by clipping, electroplating, conductive adhesive (glue/epoxy), or other similar low-temperature bonding methods. This is needed due to the muscle materials generally being unable to retain programming if heated to high for example by soldering. Some materials may be completely ruined if heated too high. It has also been found that at least nickel-titanium can hold solder or some other hard adhesives poorly due to its constant expansion and movement as well as its chemical makeup. Clipping, electroplating, and/or conductive glue/epoxy provides a flexible and strong connection and conducts electricity for long durable periods as well as, therefore solving this issue with heat and the problems with materials not able to stick to the muscle material.

The muscle elements are capable of bending in their length direction forwards and backwards. The memory material layers must be preprogrammed to allow such behavior. In another embodiment, the muscle elements are capable of bending in only one direction, whereby the array may be organized such that every second element is a forward bending one and every second a backwards bending one in order to allow all topologies to be produced.

Figure 3 shows a version of a muscle element 30 with skeleton elements 37. The conductive adhesive zones at the ends of the muscle element 30 are denoted with reference numerals 32A and 32B. The primary function of the skeleton system constituted by the skeleton elements 37 is to hold the muscle material to the flexible wiring layer. The skeleton elements 37 may be for example plastic or metal clips or strips adapted to grab to the wiring layer or to the muscle material layer on the other side of the element.

Typically, the shape changing of the element is possible by using muscle material capable of bending upon electrical input, also called “muscle wire”, made from metal alloy, for example of a mixture of nickel and titanium. In this case, the skeleton elements hold the parts of the sandwich structure tightly together even during bending without restricting its movement or suffering from movement-induced stresses, unlike a complete adhesive bonding would do.

Alternatively, other muscle type materials which contract upon electrical power input may be used. In this case, the contraction can be converted into bending of angles using the skeleton system.

The muscle material used is typically either wire or a flat stock or sheet of muscle material, which is then etched into shape required. In a simple embodiment, the shape is a rectangular shape with electrical connection apertures symmetrically on two ends. The connection apertures may be replaced by other electrical connection means capable of being clipped, electroplated or glued to the wiring layer using conductive adhesive.

Figure 4 illustrates an array of muscle elements 40A-D, 41A-D, placed side-by-side in both width and length directions. In this example, the wiring layer is common to all elements, but the muscle material layers between neighboring elements are separated by a gap to allow individual stimulation and movement.

Figure 5 shows also an array of muscle elements being provided in the form of muscle element strips 50A-H adjacent to each other. Each of the strips 50A-H contains a plurality of muscle elements arranged successively in longitudinal direction (end-to-end). Each strip comprises a common witing layer strip but neighboring strips use different wiring layer strips. Each of the strips is individually programmable, i.e. separate and independently free forming from every other strip. This is illustrated more clearly in Figure 6, showing two strips 60A, 60B. As can be seen, a strip is a long set of muscle elements placed together. These can be made as long or short as needed. When strips are placed side by side they create a sheet.

These strips and sheets can be laid on top of each other in different angles to allow for a more precise forming sheet. This solves many problems for forming shapes in comparison to using one large array of elements or strips that are each interconnected in two dimensions. Using this kind of a fully connected array (such as that of Figure 4) is workable to some level but creates problems for edges where the sheet would crease (like when placing cloth over a square, the edges crease over). Utilizing individual strips within a sheet, and potentially stacking two or more such layers on top of each other at different angles, allows shape forming without any creasing.

As shown in Figure 6, at the end of the strips there are flexible material zones 64, used to connect to a frame, in order to allow true movement of the strips to form into shapes. When the strips form a shape, they pull in the flexible material. This allows large movement area and large distance capabilities from the sheet. Without this flexible material at the ends, the strips are locked and unable to move (for example if rigidly fixed to the frame).

A uniform elastic surface layer placed on top of the strips such that the entire sheet is covered makes the surface of the sheet smooth and keeps strips aligned properly, i.e., organizes all strips.

Many memory materials are actuated using electric current, which is driven trough the material having non-zero resistivity and therefore heats the material and makes it take a preprogrammed shape corresponding to the prevailing temperature. There are, however, also other means for achieving the required temperature, such as using electrically driven separate heaters or coolers based e.g. on Peltier effect. The term “electric stimulation” covers all such methods irrespective of whether direct “Joule heating” or indirect heating is used.

The electric stimulation is preferably achieved by demultiplexing, i.e. pulsing the elements electrically one or several at a time according to a predefined pulsing scheme. For example, each element can be formed is formed to the desired shape by selecting a suitable pulse width. A neighboring element may be subjected to a shorter or longer pulse. Higher pulse width enables higher degrees of angles, lower pulse width allows lower degrees of shape change. This allows many different precise settings of angles. Alternatively or in addition to that, pulse voltage or current may be varied. Demultiplexing can be continued as long as needed to achieve and maintain the desired shape of the film. Demultiplexing also allows the ability of lower power consumption compared to powering fully each element.

A suitable wiring pattern allowing demultiplexing can be relatively easily designed to the wiring layer or wiring strips.

A watertight elastic film on top of the sheet makes the design waterproof and weatherproof and thus contributes to the long life cycle of the sheet.

In case high temperature stability and/or protection against external temperature changes is needed, there may be provided insulating means or means for actively controlling the temperature of the film. Figure 7 shows one implementation. In general, there is provided a system comprising a layer of air or vacuum on both sides of the sheet, and then additionally on top of that layer, a layer of cooling liquid which have forced fluid convection, for example using pump(s), which can be placed at the sides of sheet connected to the frame. In more detail, there is a wiring layer 75 sandwiched between muscle material layers 71. Next, on both sides symmetrically, the is an air/vacuum gap 73. The gap 73 is limited by a fluid channel 72 defined between elastic material layers 74, one of which forms the surface of the film and one of which is against the air gap. The fluid channel 72 is connected at one end to a fluid input 77A and at the other end to a fluid output 77B. The fluid may be directed to a next muscle element (not shown) connected in series with the element shown. There are also provided rigid support members 76, which prevent the temperature control system from collapsing and help to retain the thickness of the film uniform also when in bent state. The proposed structure has ability to withstand extremely high temperatures.

As briefly referred to above, according to one embodiment, a finished sheet comprises two sheets, preferably of the strip design described above placed on top of each other, the top sheet preferably being at a 90 degree angle to the bottom sheet. Figure 8 illustrates such design and also shows the film in shape-programmed state. The muscle elements on the different sheets form a complete square grid with nodes at the end points of the muscle elements. Then, on the outside, i.e. top and/or bottom of the resulting double sheet, a elastic film/sheet material is affixed such that is spans over the regions between the muscle elements over the whole grid and forms a uniform surface for the sheet. This, in combination with the double-sheet structure, allows very smooth shapes to be created. The proposed two-layer sheet design also differs from designs in which have muscle material arranged in two directions in a single layer.

It is also possible for many other variations to be made in addition to those described above. For example, the sheets need not be at 90 degrees angle with respect to each other, but a smaller angle may be used, or there may be provided more than two sheets on top of each other.

Figure 9 shows a reprogrammable sheet 85 attached to a frame 86. The sheet is connected to a control computer 82 via a control unit 84, preferably a demultiplexer unit. The computer 82 comprises a software capable of reading a digital 3D model in a suitable format and converting it to demultiplexing instructions for the demultiplexing unit 84, which further converts the instructions into electrical shaping signals transferred to the muscle elements of the sheet 85 by multiplexing. The control unit 84 may be a separate unit or integral with the computer 82 or the frame 86.

8.3 Application areas

The present invention has numerous areas of application due to its programming ability into an infinite number of shapes and scalability to almost any size needed. Some of the areas are briefly introduced below.

8.3.1 Injection molding

The sheet can be used as a part of a programmable injection molding machine. In particular, utilizing a double sheet design described above and active temperature control system, it can form shape and have molten plastic (or even metal) injected inside of it to create a plastic (or metal) part. The whole injection mold or only part of it may be formed by the present sheet and there may be a plurality of sheets programmed in co-operation to achieve the desired form of the mold.

Figure 10 shows a system with an injection mold 96, i.e, mold cavity. A section 97 (one wall of the box-shaped mold 96) is formed by a sheet according to the invention. The shape of the sheet can be controlled with a control computer 92 to correspond to a 3D model of the object to be produced and an electronic control unit 94 in the same way as described with reference to FIG. 9 and other related passages above. The control computer 92 (or another control unit) is also connected to a material feed system 98 for feeding molten material to the mold to produce an object having the programmed shape.

8.3.2 Fiber molding

The sheet can be used as part of a fiber molding machine used e.g. for shaping fiberglass, kevlar, carbon fiber objects or composite material objects. The sheet is used to form a desired shape, and then fiber may be laid into the shape.

8.3.3 Shaping of screens

The present sheet can also be used behind a flexible screen, such as an OLED, LED, projection, phone, tablet or laptop screen. The sheet is able to bend or morph the surface into a desired shape or visualize an image on the screen. This creates a true 3D image or shape.

Individual light emitting units, such as LEDs, can also be placed on the surface of the sheet to create large multiplexed displays without a need for a separate flexible screen.

Currently special glasses to have a 3D effect in television or computer are used. They are, however, annoying to wear and often also of bad quality. With new technologies such as flexible LCD screens coming onto the markets, the present sheet can be used to create real 3D TV or computer displays where the objects on the screen really do “pop out” at the viewer. This provides real “depth” into the scene.

8.3.4 Shaping of vehicle parts

The sheet can be used as vehicle (car, boat, plane) panel or parts in order to allow programmable/reprogrammable forms/shapes. This may be desirable for aesthetic reasons or to repair (bounce back) from damage.

8.3.5 Design and visualization

The sheet can be used for visualization of design or engineering works, i.e. for allowing users to view a product from 3D software in actual real life dimensions without producing a prototype. Thus, the sheet is ideal for shape memory alloy aided architecture (SMAAD). The 3D object can literally pop out from a desk or floor and allow viewing of an object very simply. This is just like a hologram in the traditional sense, popping out of the desk in front of the viewer. This can even be coupled with flexible LCD screens, for example, for many more uses.

8.3.6 Assistive technologies

The sheet can be used in connection with assistive technologies such as braille, for visually impaired persons. This can allow for them to view the Internet unlike ever possible before, as well as create a whole new world of touch to the internet. Current braille devices for viewing the Internet and computer software is one line at a time only, this would allow full page viewing at any time.

8.3.7 Advertisement

The sheet is suitable for advertising on TV, billboards, posters, tables, and other flat or curved surfaces. This allows an advertisement or product to pop from the surface to grab attention. Objects can even rotate or move in front of the customer.

8.3.8 Aerodynamics

The sheet can be used for aerodynamic solutions which require a surface to form into many different shapes. This is useful e.g. in racing, in which there is a need to have both braking power (downforce) and aerodynamics. If there are more aerodynamics then braking becomes harder and visa versa. The present reprogrammable sheet may be used to provide aerodynamics when needed and braking power when needed.

8.3.9 Cellphones

One of the problems with cellphones currently is the absence of tactile feedback, making it hard to type with the “keys” of a flat touchscreen. With flexible LCD screens, the present sheet may be placed behind the screen for allowing letter keys which can be touched and felt to pop up. Similarly, many other tactile and visual effects can be produced.

8.3.10 Creation of electronic devices

The concepts of the present invention and embodiments can be utilized to create electronic devices, such as phones, tablets and computers, which can change shape and deform. For example, when traveling or transporting a device it may be desirable for a portion or the entire electronic device to change shape in order to be more compact or to fit a desired shape which is conducive for travel and/or storage.

Once the device is to be used then it can assume its intended larger shape.

It is to be understood that the embodiments of the invention disclosed are not limited to the particular structures, process steps, or materials disclosed herein, but are extended to equivalents thereof as would be recognized by those ordinarily skilled in the relevant arts. It should also be understood that terminology employed herein is used for the purpose of describing particular embodiments only and is not intended to be limiting.

Reference throughout this specification to “one embodiment” or “an embodiment” means that a particular feature, structure, or characteristic described in connection with the embodiment is included in at least one embodiment of the present invention. Thus, appearances of the phrases “in one embodiment” or “in an embodiment” in various places throughout this specification are not necessarily all referring to the same embodiment.

As used herein, a plurality of items, structural elements, compositional elements, and/or materials may be presented in a common list for convenience. However, these lists should be construed as though each member of the list is individually identified as a separate and unique member. Thus, no individual member of such list should be construed as a de facto equivalent of any other member of the same list solely based on their presentation in a common group without indications to the contrary. In addition, various embodiments and example of the present invention may be referred to herein along with alternatives for the various components thereof. It is understood that such embodiments, examples, and alternatives are not to be construed as de facto equivalents of one another, but are to be considered as separate and autonomous representations of the present invention.

Furthermore, the described features, structures, or characteristics may be combined in any suitable manner in one or more embodiments. In the following description, numerous specific details are provided, such as examples of lengths, widths, shapes, etc., to provide a thorough understanding of embodiments of the invention.

One skilled in the relevant art will recognize, however, that the invention can be practiced without one or more of the specific details, or with other methods, components, materials, etc. In other instances, well-known structures, materials, or operations are not shown or described in detail to avoid obscuring aspects of the invention.

While the forgoing examples are illustrative of the principles of the present invention in one or more particular applications, it will be apparent to those of ordinary skill in the art that numerous modifications in form, usage and details of implementation can be made without the exercise of inventive faculty, and without departing from the principles and concepts of the invention. Accordingly, it is not intended that the invention be limited, except as by the claims set forth below.

8.4 Claims

1. A reprogrammable shape change sheet comprising
a plurality of muscle elements capable of changing shape upon electric stimulation, the elements being arranged in an array to define a surface,
wherein said muscle elements comprise two muscle material layers capable of changing shape upon electric stimulation and a flexible wiring layer sandwiched between the muscle material layers, the wiring layer being electrically connected to said muscle material layers for delivering electric stimulation signals to the muscle material layers for changing the shape of the muscle elements and further the topology of the surface.
2. The shape change sheet according to claim 1, wherein the muscle material layers comprise shape memory material (SMM) layers.
3. The shape change sheet according to claim 1, wherein the wiring layer is common to more than one muscle element and comprises electrical conductors capable of providing said electric stimulation signals individually for said plurality of muscle elements.
4. The shape change sheet according to claim 3, wherein the electrical conductors

are arranged so as to allow de-multiplexing of individual signals to said muscle elements to program

5. The shape change sheet according to claim 1, wherein

the muscle elements are arranged as strips each comprising a plurality of muscle elements connected successively in a first direction, and

there are provided a plurality of strips arranged successively in a second direction perpendicular to said first direction.

6. The shape change sheet according to claim 5, wherein the muscle elements of different strips are mechanically uncoupled by any rigid connecting means so as to allow deformation of the strips independently of each other.

7. The shape change sheet according to claim 5, wherein the strips are connected at both ends thereof to a rigid supporting structure by flexible connectors.

8. The shape change sheet according to claim 5, wherein the strips are sufficiently narrow and spaced apart such that the sheet is at least partially transparent.

9. The shape change sheet according to claim 1, wherein the muscle material layers are electrically connected to electric conductors on the wiring layer using flexible connecting means.

10. The shape change sheet according claim 1, wherein there are provided a plurality of skeleton elements adapted to support the sandwich structure of the muscle elements by holding the muscle material layers and the wiring layer together.

11. The shape change sheet according to claim 1, wherein there are provided means for preventing heat flux to the muscle material layers and/or for actively cooling the muscle elements.

12. The shape change sheet according to claim 1, wherein there are provided two layers of muscle elements arranged on top of each other and in different directions.

13. The shape change sheet according to claim 1, wherein there is provided a unitary flexible material layer covering the individual muscle elements on at least one side of the muscle elements for smoothening the surface of the shape change sheet.

14. The shape change sheet according to claim 1, further comprising an electrical control unit or an electrical connector for a control unit for providing the electric signals to the muscle elements for shaping the shape change sheet to the desired form.

16. The shape change sheet according to claim 1, wherein the muscle elements have a rectangular in-plane footprint.

17. A programmable injection molding machine, comprising

a mold cavity,

means for injecting moldable material to the mold cavity for forming an object whose shape corresponds to internal shape of the mold cavity,

wherein at least part of the mold cavity is defined by a reprogrammable shape change sheet comprising a plurality of muscle elements each comprising a flexible wiring layer sandwiched between two muscle material layers capable of changing shape upon electric stimulation and being arranged to define a surface, and wherein the flexible layer comprises electrical conductors electrically connected to said muscle material layers for delivering stimulation electric signals individually to the muscle elements for changing the shape of the surface.

18. The programmable injection molding machine according to claim 22, further comprising means for storing a 3D model of at least part of the object in computer readable form and means delivering electric stimulation signals to the reprogrammable shape change sheet in order to shape the sheet to correspond said 3D model.

9 CONCLUSION

In conclusion, the results of this thesis have been extremely positive. The action based research method proved to be the method which worked for me personally in this product/invention design process. This process helped me create and bring to fruition a product, and technology, which my company is currently working with clients and partners to develop and use in products today. Stepping outside the box of what is currently available or known is something which I truly believe to be the best path at creating something game changing. When one steps back from thinking the current technology is the best it can be, that the circle rolls the best and there is nothing to make it better, and one crams their head with information surrounding the idea – there is the possibility to come up with ideas, potentially ones which can change the world.

Hiccups will constantly arise. Failure is inevitable. Getting around this is how you shift your thinking and approach on each failure that will determine if you go forward or get stuck behind. From my experience, as laid out in this thesis, there is always a way to accomplish what you strive for if you continue to take different perspectives on it. From there, each failure is just another chance for success in the project – one step closer to accomplishing and solving your problem at hand.

After all is said and done, the step to take is to patent the final idea in order to seal in the hard work and protect it for market potential. As shown here, the writing involved in the patent to protect every little idea, can be quite overwhelming. I believe it is fully worth the effort especially after all your hard work solving the issue.

These are all the steps, which I personally take, and for readers I only wish for them to consider this process during their own design development. These processes have allowed me to gain developmental knowledge, as well to reach the final goal of creating a technology from scratch.

REFERENCES

Bryce, D. 1999. Plastic Injection Molding: Manufacturing Startup and Management.

Allen, S. 2013. Reprogrammable shape change sheet, uses of the sheet and method of producing a shaped surface. https://www.google.com/patents/US20140255534

Lewin, K. 1946. Action research and minority problems. http://psycnet.apa.org/psycinfo/1947-01946-001

Lagoudas, D. 2008. Shape Memory Alloys: Modeling and Engineering Applications

A

Appendix 1

Figure 1 shows a perspective exploded view of a muscle element according to one embodiment of the invention.

Figure 2 shows a perspective view muscle element of FIG. 1 in assembled state.

Figure 3 illustrates a perspective view of a muscle element provided with a skeleton system.

Figure 4 shows a perspective view of a two-dimensional array of muscle elements forming a sheet according to one embodiment of the invention.

Figure 5 shows a perspective view of a two dimensional array of muscle elements with skeleton systems according to one embodiment of the invention.

Figure 6 illustrates a perspective view of a section of a sheet formed using muscle element strips.

Figure 7 shows a cross-sectional side view of a muscle unit provided with a temperature control system.

Figure 8 shows a perspective view of a programmable sheet programmed into a non-planar shape.

Figure 9 is a schematic illustration of a reprogrammable sheet according to the invention connected to a shape control system.

Figure 10 is a schematic illustration of shows injection molding instrumentation according to one embodiment of the invention.

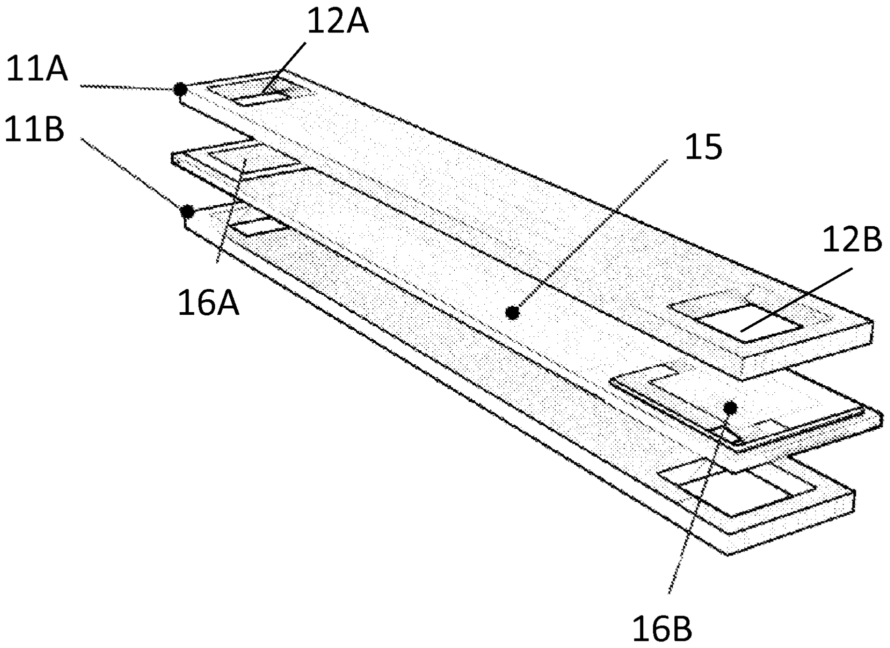

Fig. 1

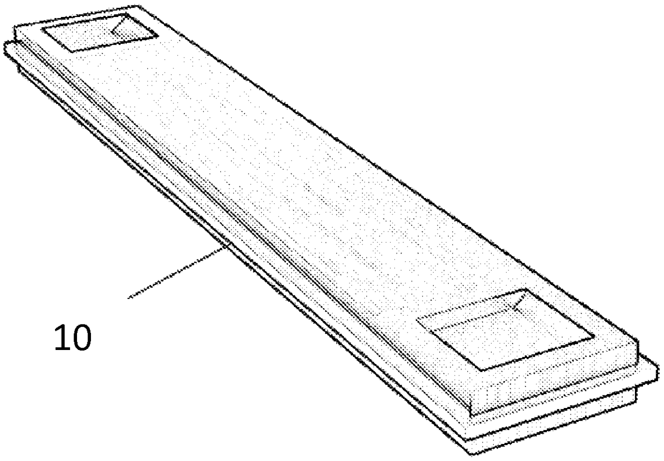

Fig. 2

Appendix 3

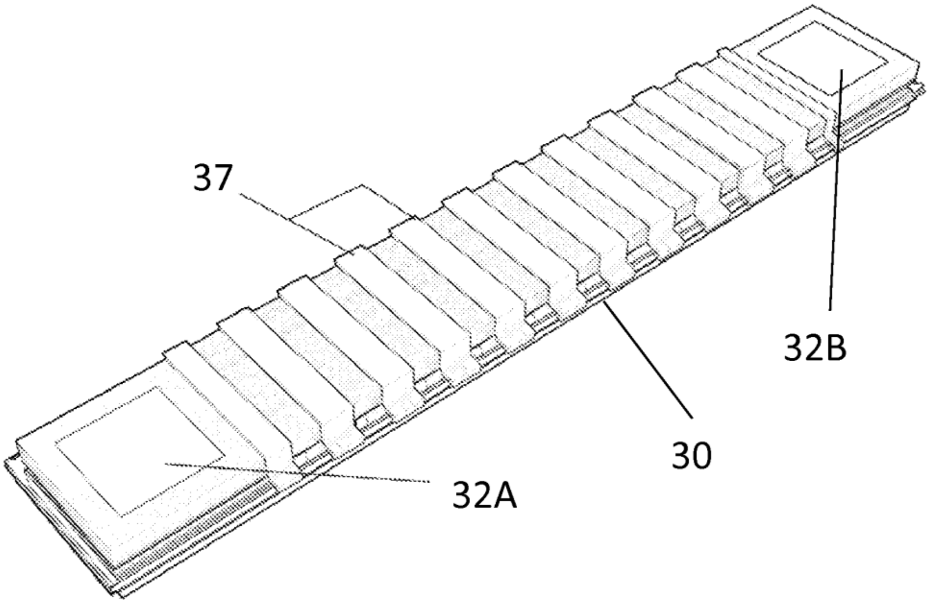

Fig. 3

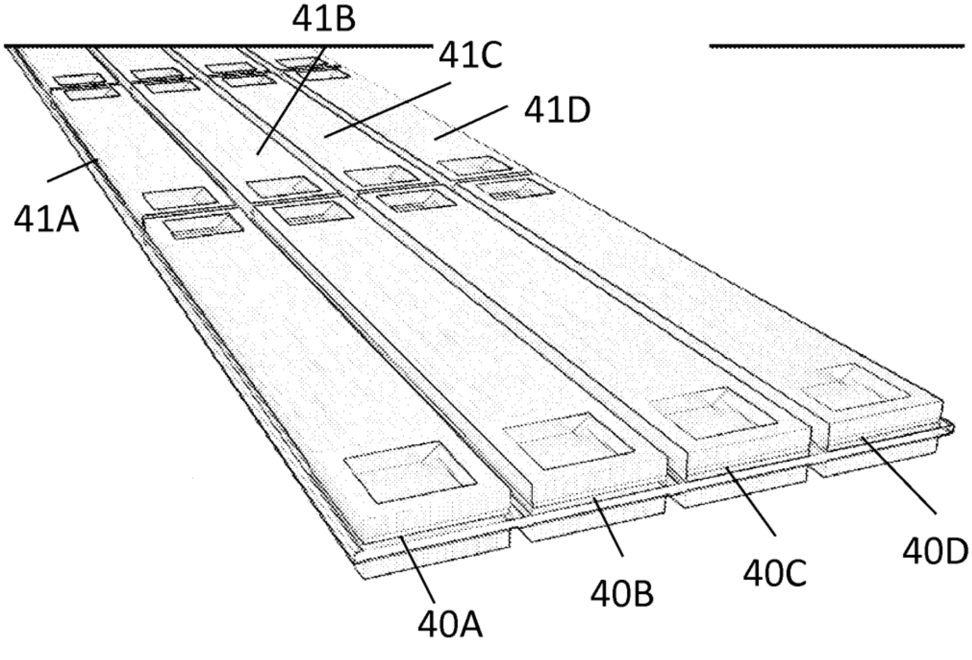

Fig. 4

Appendix 4

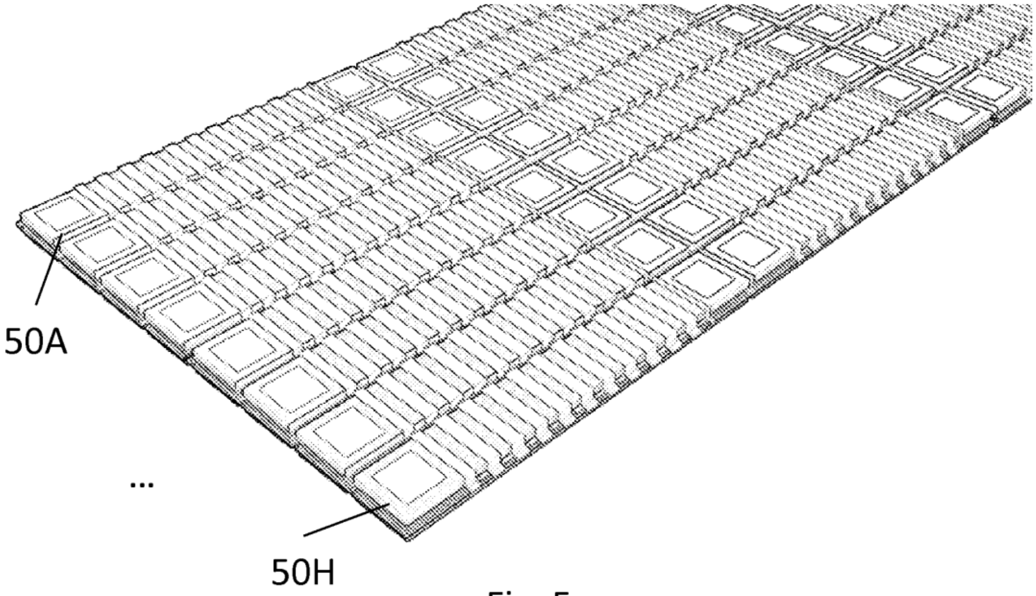

Fig. 5

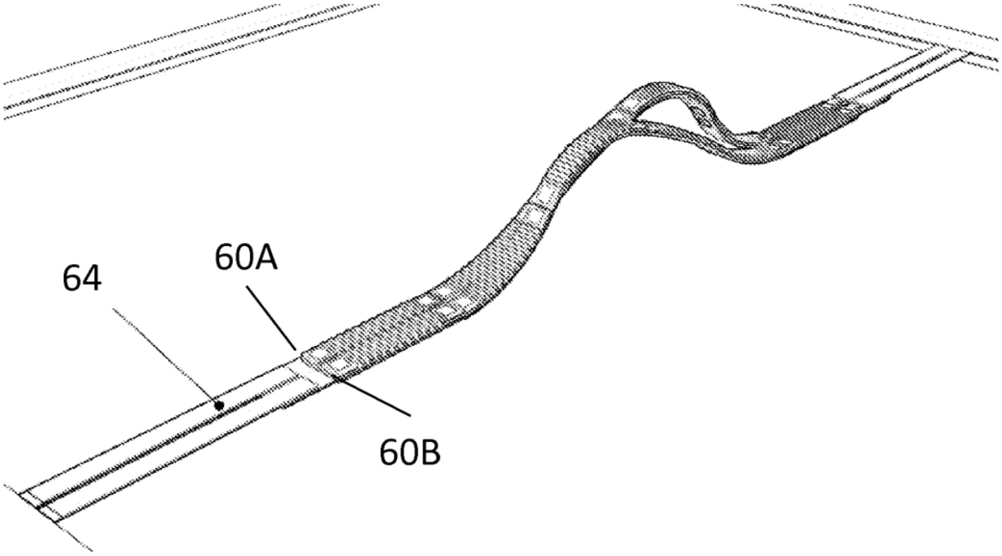

Fig. 6

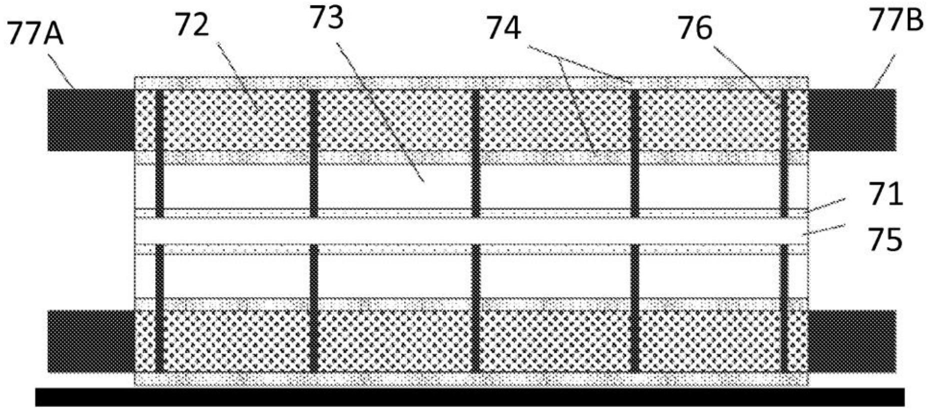

Fig. 7

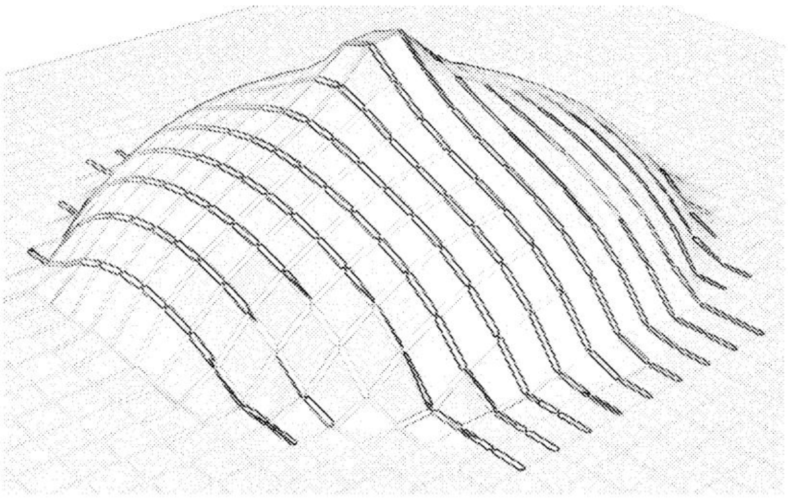

Fig. 8

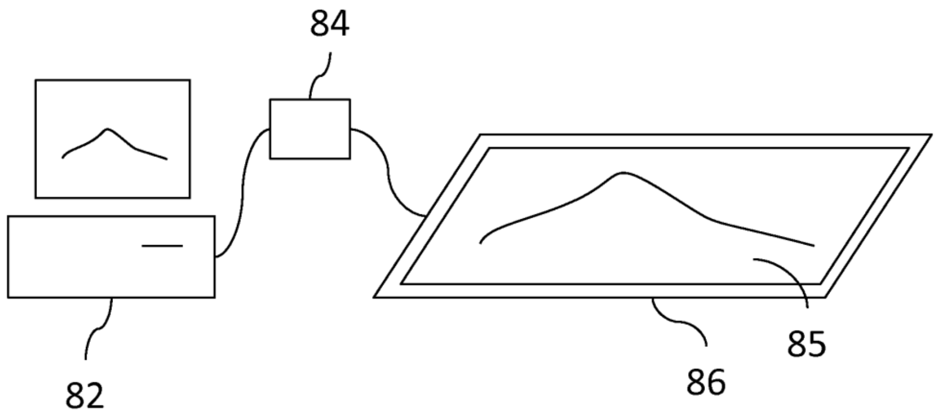

Fig. 9

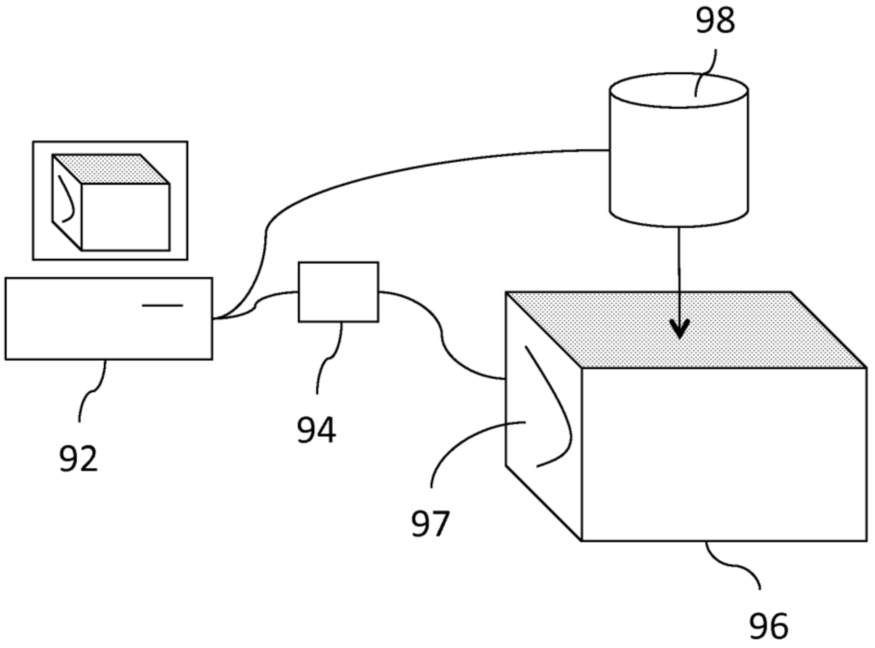

Fig. 10