Sunil Karki

Reference Radiatior for EMC Measurements

Oscillator and Wideband LPDA Antenna Design

Helsinki Metropolia University of Applied Sciences

Bachelor's Degree

Degree Programme in Electronics

Bachelor's Thesis

17.05.2017

Helsinki Metropolia University of Applied Sciences

Author(s) Title Number of Pages Date	Sunil Karki Reference Radiator for EMC Measurements 50 pages + 2 appendices 15 May 2017
Degree	Bachelor's degree
Degree Programme	Electronics
Specialisation option	
Instructor	Matti Fischer, Principal Lecturer

The aim of this thesis was to produce a reference radiator for Electromagnetic Compatibility (EMC) measurements, where a Voltage Controlled Oscillator (VCO) is used to generate wide-band signals of 600-1300 MHz, that will be radiated by wide-band antenna. After amplifying the signal, another similar antenna was used to receive the signal and the whole radiation pattern was examined in an anechoic chamber located at Electronics department of Helsinki Metropolia UAS. This radiator will be used in one of the EMC labs by the students who are going to study professional EMC course.

The VCO and RF amplifier used in this project were bought from Mini-Circuits, whereas the antennas were designed from the scratch. However, to demonstrate the knowledge on how oscillator is designed, a negative resistance microwave oscillator was designed using AWR Microwave Office software tool. The project did not involve the fabrication of the oscillator as this would take more time than allocated. The type of antenna designed was printed or microstrip log-periodic dipole array, which was first designed and simulated using CST design studio and later fabricated on FR4 PCB board.

The conduction of antenna tests in an anechoic chamber using network analyser demonstrated that the antennas were performing well for the desired frequency band when taking reflection and transmission coefficient into account. The simulated and measured results were supporting each other very well with respect to radiation pattern and directivity. Furthermore, the frequency spectra were obtained as mentioned in the datasheet of VCO from mini-circuits when the whole setup including the VCO, RF amplifier and the antennas was tested using spectrum analyser. Therefore, this allows that the setup can be used as a device of reference radiator for various antenna tests related to RF.

Keywords	EMC, Oscillator, VCO, microwave, wide-band, microstrip, antenna, log-periodic dipole array (LPDA), anechoic chamber

Contents

Abbreviations

EMC	Electromagnetic Compatibility
VCO	Voltage Controlled Oscillator
MHz	Megahertz
kHz	Kilohertz
LPDA	Log-Periodic Dipole Array
BJT	Bipolar Junction Transistor
RF	Radio Frequency
FET	Field-Effect Transistor
VSWR	Voltage Standing Wave Ratio
UHF	Ultra-High Frequency
PCB	Printed Circuit Board
TEM	Transverse electromagnetic
PLL	Phase-locked Loop
AC	Alternating Current
DC	Direct Current
RFC	Radio Frequency Choke

1 Introduction

In today's digital world, it has been utterly necessary to design electrical and electronic devices keeping in mind the potential interference they might possess to each other by emitting radio-frequency (RF) energy. Functionality of one device should not interfere with another, so such devices must undergo various types of Electromagnetic Compatibility (EMC) tests to perform under certain standards. The tests are already carried out during preliminary design and is beneficial in ensuring reliable operation, minimizing production cost and time and meeting regulatory requirements. This is the idea behind this thesis project where RF signal is tested and studied in an anechoic chamber after the accomplishment of an antenna design and fabrication.

The aim of this thesis was to build a reference radiator that will generate wideband signal and will be radiated by a wideband antenna. The electronic parts will be enclosed in a box and the antenna will be connected to it outside the box. The Voltage Controlled Oscillator (VCO) will be implemented as a signal generator and wideband printed or microstrip log-periodic dipole array (LPDA) will be the antenna. A buffer amplifier will be applied between the VCO and the antenna to avoid frequency pulling via isolation to avoid frequency modulation and other unnecessary disturbances.

The initial idea was to utilize the frequency range of 100 MHz to 900 MHz but on deciding to buy a commercial VCO from a supplier, Mini-Circuits in this case, the nearest match happened to be of 400-1300 MHz. However, a microwave oscillator has been designed using AWR Microwave Office just to demonstrate simple idea behind the design procedure and it does not involve fabrication of the circuit. AWR Microwave Office is a RF/Microwave circuit design software tool. Furthermore, microstrip LPDA will be designed using Computer Simulation Technology (CST), which is antenna design and simulation tool. Finally, two LPDA antennas will be fabricated on FR4 copper board using milling machine and will be tested in an anechoic chamber.

2 Oscillator Fundamentals

Oscillators have been the heart to every area that involve radio frequency (RF) and microwave electronics. At least one oscillator is employed, practically in all microwave systems with the purpose of generating a local reference signal at specific frequencies. Basically, oscillators are electronic circuits that produce output signal or periodic waveform with only the input supply of dc voltage. The type of oscillator determines whether the output voltage is either sinusoidal or non-sinusoidal. They are used as signal source to generate a local reference signal at specific frequencies [1] [2]. In this chapter, brief introduction about basic oscillator circuit together with various types of most common oscillators is presented.

The basic phenomena of an oscillator can be related to a pendulum where mechanical energy gets exchanged between two forms such as kinetic and potential with energy being stored and exchanged at different swinging positions. In the same manner, energy is stored in the form of electrostatic and magnetic fields simultaneously in capacitors and inductors when it comes to electronic oscillators. Therefore, the basic oscillator is normally pictured as a LC tank circuit, which is shown in Figure 1. [3]

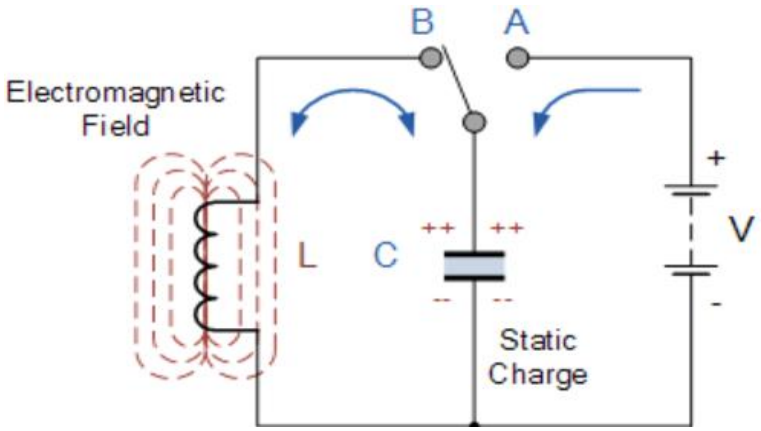

Figure 1. A basic LC tank circuit. [3]

The LC oscillator circuit in Figure 1 has a single capacitor (C) and a single inductor (L) connected. If the circuit is lossless (zero resistance), an energy is supplied to it to start, and all this energy is utilized in charging the capacitor by storing electrostatic energy. Upon disconnecting the energy source, the charged capacitor starts to discharge gradually and the current starts to flow towards the inductor creating a magnetic field around

it. When the inductor current reaches its maximum value, the magnetic field starts to collapse and current flows back to capacitor recharging it. This cycle will repeat continuously exchanging the energy between the capacitor and the inductor with an output of sinusoidal waveform with respect to time as shown in Figure 2. [3]

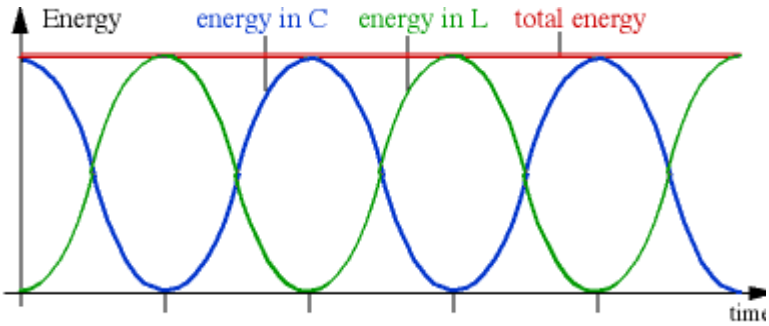

Figure 2. Ideal output waveform of a basic LC oscillator tank circuit.

3 Oscillator Model

All modern radar and wireless communication systems are composed of RF and microwave oscillators for the purpose of providing signal sources during frequency conversion and generation of carrier frequency [4]. The oscillators can be usually categorized into two types, namely, feedback oscillators and relaxation oscillators. Feedback oscillators are the ones where a part of output signal is fed back to the input with no net phase shift that results in the strengthening of the output signal as shown in Figure 3. Whereas, relaxation oscillators consist of RC timing circuit to produce non-sinusoidal waveform. [1]

This section presents an overview of transistor oscillator circuits having low frequency, including very common Colpitts, Hartley and Clapp configurations. Furthermore, the other part of this section is based on oscillators at microwave frequencies that is different from lower frequency because of various transistor features, and the capability to employ negative resistance devices along with high-Q microwave resonators. [4]

3.1 RF Oscillators

Generally, electronic oscillator can be modelled as an amplifier with feedback. Most of the RF oscillators are meant for providing sinusoidal outputs with minimum undesired harmonics and noise sidebands. In this model, some sort of feedback mechanism is involved in feeding back the output of the amplifier to the input as shown in the Figure 3. The mechanism can be electrical circuit or internal physical process of the active device itself. [2]

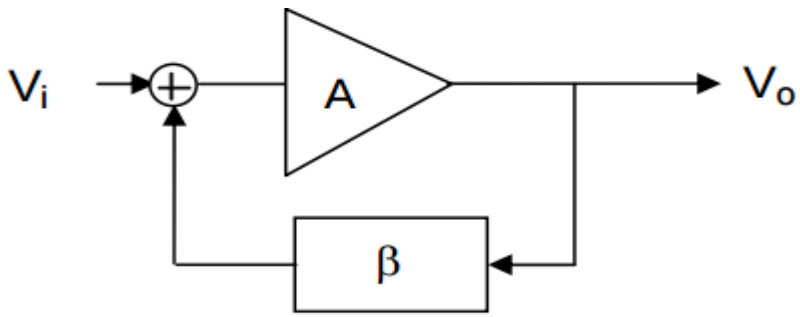

Figure 3. Block diagram of feedback oscillator. [2]

From Figure 3, output signal voltage, v_o, with respect to input signal voltage, v_i, can be written as:

$$v_0 = A[v_i + \beta v_o] \tag{1}$$

As the amplifier gain, A, and the feedback fraction β, are functions of frequency, the Equation 1 can be written in terms of transfer function, v_o/v_i, as

$$\frac{v_0}{v_i} = \frac{A(j\omega)}{1 - A(j\omega)\beta(j\omega)} \tag{2}$$

The sign of the product $A(jw)\beta(jw)$ in the equation (2), that depends on the combined phases of $A(jw)$ and $\beta(jw)$ and therefore determines whether the feedback is either negative or positive. The tendency of the negative feedback to reduce fluctuations in v_o, help increase stability of the system since there is a destructive addition of v_i and βv_o. Conversely, the positive feedback has the reverse effect as the variations in v_i and βv_o positively reinforces each other. As a result, v_o amplitude will rise to certain level set by circuit restraints, for instance, power supply voltage or nonlinearities of the active device. [2]

The transfer function in equation 2 becomes infinite if

$$A(j\omega) \cdot \beta(j\omega) = 1 \tag{3}$$

This is the condition for oscillation and is basically known as Barkhausen criterion. This criterion states that for oscillation to start, the voltage gain around the positive feedback loop should be greater than 1(unity), that is ($|A(j\omega)| > 1$), to reach a desired level for the amplitude of the output voltage. Furthermore, to keep the output at the desired level so that the oscillation is sustained, the loop gain should then decrease to 1. The voltage gain is the ratio between the output and input voltage and is the product of the amplifier gain, A, and the attenuation, β, of the feedback circuit. [1]

3.1.1 Colpitts Oscillator

A Colpitts oscillator is a resonant circuit feedback oscillator comprising of a low pass LC π- network that allows only desired frequency of oscillation along with required phase shift. It is applicable for RF devices with the distinctive operating range of 20 kHz to 300 MHz. [5]

A common emitter bipolar junction transistor (BJT) Colpitts oscillator is shown in Figure 4 where a single BJT is the active device and the feedback network comprises of the series capacitors C_1 and C_2 in parallel with the inductor, L_1. The base of the transistor is AC grounded with the capacitor C_3 and the voltage divider R1 and R2 are used for DC biasing point of the transistor. In common base mode, there is 0° phase shift, meaning that output voltage waveform at the collector is in phase with the input signal at the emitter. The required positive feedback is provided to the emitter by the signal coming from part of the output signal of the tuned collector load. Another capacitor C_4 ensures that the V_{CC} rail is AC grounded. [2]

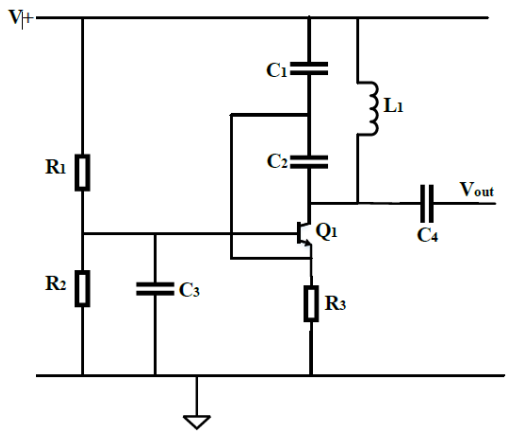

Figure 4. Common base BJT Colpitts oscillator [2]

Ideally, at resonance, the assumption is made that there is no loading on the tuned circuit and that means $X_L = X_C$ and it gives

$$\omega L = \frac{1}{\omega C_1} + \frac{1}{\omega C_2} \tag{4}$$

Which yields resonant frequency (f_r) as:

$$\omega^2 = \frac{1}{L_1}\left[\frac{1}{C_1} + \frac{1}{C_2}\right] \tag{5}$$

$$f_r = \frac{1}{2\pi\sqrt{L_1\left(\frac{C_1 C_2}{C_1 + C_2}\right)}} \tag{6}$$

In Colpitts oscillator, the values of C1 and C2 in the resonant feedback circuit determines the attenuation, β, which is the ratio of feedback voltage (V_f) across C_1 and output voltage (V_{out}) across C_2 and is expressed as

$$\beta = \frac{V_f}{V_{out}} = \frac{IX_{c1}}{IX_{c2}} = \frac{\frac{1}{2\pi f_r C_1}}{\frac{1}{2\pi f_r C_2}} = \frac{C_2}{C_1} \tag{7}$$

The condition for oscillation demands that voltage gain around the closed feedback loop must be unity and that is $A\beta = 1$. So, β from equation 7 gives,

$$A = \frac{1}{\beta} = \frac{C_1}{C_2} \tag{8}$$

3.1.2 Hartley Oscillator

The Hartley oscillator resembles the Colpitts when capacitors and inductors in the feed-back tank circuit are exchanged, as shown in Figure 5.

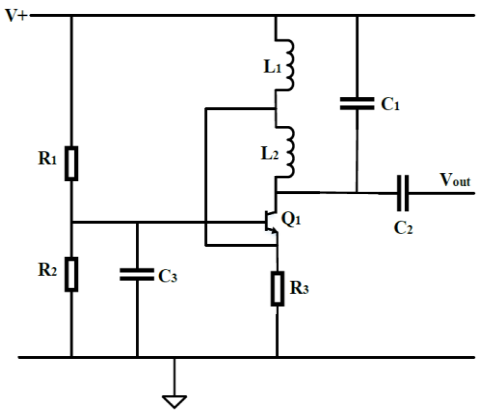

Figure 5. Common base BJT Hartley Oscillator. [2]

If there is no loading on the tuned circuit at resonance, we get $X_L = X_C$, which further gives

$$\omega(L_1 + L_2) = \frac{1}{\omega C_2} \tag{9}$$

Therefore, resonant frequency is given as

$$f_r = \frac{1}{2\pi\sqrt{C_2(L_1 + L_2)}} \tag{10}$$

3.1.3 The Clapp Oscillator

If an additional capacitor C_3 in the circuit tank of the Colpitts oscillator is connected to the inductor in series, as shown in Figure 6, the Clapp oscillator is formed. The Clapp topology is often preferred over the Colpitts for manufacturing variable frequency oscillator, where C_3 is tuneable. The Colpitts topology would be problematic to build a variable frequency oscillator through the variation in one of the voltage divider capacitors C_1 and

C_2 as feedback voltage would vary as well, resulting in the variable conditions for oscillations for the chosen frequency range. However, the Clapp topology avoids this problem by employing fixed capacitors C_1 and C_2 in the voltage divider and adding tuneable capacitor C_3 in series with the inductor in the tank circuit. Moreover, the tuning the variable capacitor does not affect the feedback conditions around the transistor Q_1. [2]

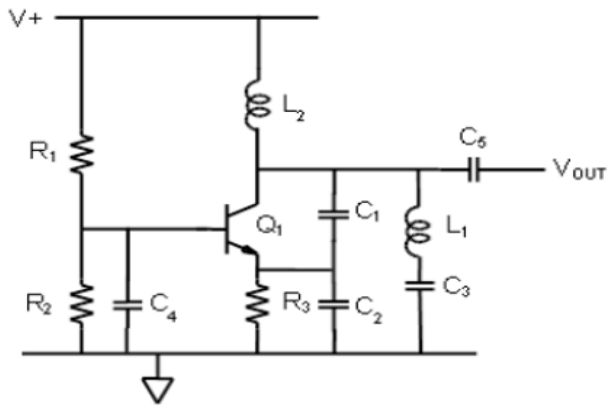

Figure 6. A basic Clapp Oscillator [2]

At resonance, there is no loading in the tuned circuit, so $X_L = X_C$ and that gives

$$\omega L = \frac{1}{\omega C_1} + \frac{1}{\omega C_2} + \frac{1}{\omega C_3} \tag{11}$$

Therefore, resonant frequency is

$$f_r = \frac{1}{2\pi}\sqrt{\frac{1}{LC_3}}\left(1 + \frac{C_3}{C_1} + \frac{C_3}{C_2}\right) \tag{12}$$

When choosing the component value so that $\left(\frac{C_3}{C_1} + \frac{C_3}{C_2}\right) \ll 1$, Equation 12 becomes

$$f_r = \frac{1}{2\pi\sqrt{LC_3}} \tag{13}$$

The Clapp oscillators are often designed in a way that the condition for Equation 13 is met. The oscillator can be tuned by varying only C_3, which can be, for instance, electronically tunable varactor. This allows the values for fixed capacitors C_1 and C_2 to be chosen

independently while only keeping ratio of $C_1 : C_2$ into consideration, which is more important than the actual values. [2]

3.2 Microwave Oscillators

At microwave frequencies, fundamental frequencies up to 100 GHz can be produced by using transistors or diodes biased to a point for the operation of negative resistance with cavity, transmission line, or dielectric resonators [4]. This section emphasizes on microwave transistor oscillator circuits based on negative resistance devices since the oscillator designed in this project is based on this circuit which is possible with the help of Microwave Office.

3.2.1 Negative-Resistance Oscillator

The required conditions for oscillation can be analysed by using a model shown in Figure 7, which is based on the concept of negative resistance. The working principle for this concept is that once the resonator, for instance, inductor-capacitor tuned circuit gets excited, it will oscillate non-stop in the absence of resistive element that could dissipate the energy. The job of the amplifier shown in Figure 7 is to produce the negative resistance and maintain oscillation by providing enough energy to compensate that dissipated. Different factors, for example, frequency of oscillation, tuning range, transistor choice and type of resonator determines the circuit topology of this type of oscillator. [6]

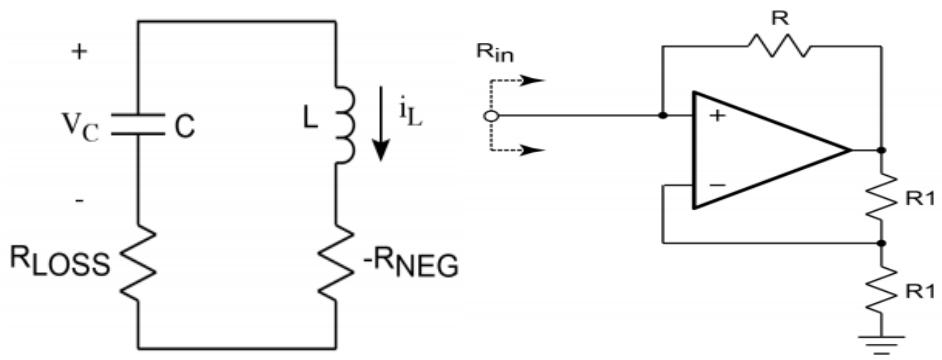

Figure 7. LC resonant oscillator modelled by a negative resistance concept (left) and amplifier to feed energy into resonator to compensate R_{LOSS} (right). [7]

3.2.2 Transistor Oscillators

The circuit for a two-port transistor oscillator is shown in Figure 8, where a one-port network with negative-resistance is efficiently created when a potentially unstable transistor is terminated using impedance that lead the circuit towards unstable region. A transistor possessing more stability, typically, an unconditionally stable, is ideal for amplifier design, whereas, an oscillator demands a device with maximum instability. Therefore, to increase the instability of the device, generally, common source or common gate FET configurations are selected together with positive feedback. Similarly, common emitter or common base configuration is used for bipolar devices. [4]

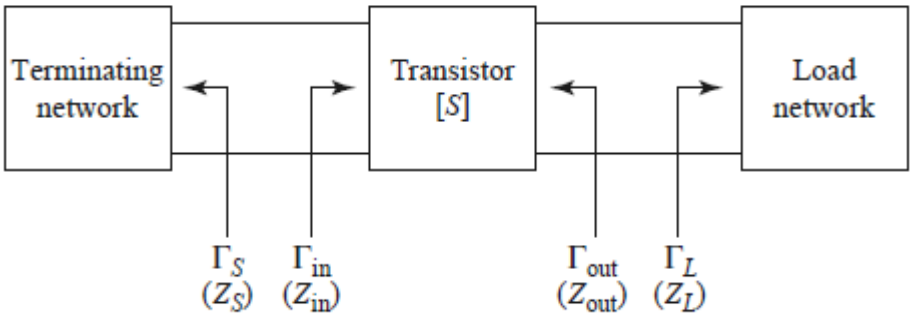

Figure 8. Two-port transistor oscillator circuit. [4]

When the type of configuration is chosen for the transistor, the output stability circle is made in the Γ_L plane and Γ_L value is chosen such that transistor input gives a large value of negative resistance. After that the terminating impedance $Z_S = R_S + jX_S$ is chosen to match Z_{in}. It is important to select R_S such that $R_S + R_{in} < 0$ because the chosen design depends on small-signal S parameters and building up of oscillator power causes R_{in} less negative. If $R_S + R_{in} > 0$, as R_{in} increases with increase in power, the oscillation will stop. Practically, R_S is chosen as

$$R_S = -\frac{R_{in}}{3} \tag{14}$$

The circuit is resonated by the reactive part of Z_L as

$$X_S = -X_{in} \tag{15}$$

There is a simultaneous occurrence of oscillation at the output port of the transistor when the oscillation takes place between the termination network and the transistor, which can be shown as follows. It must be $\Gamma_s\Gamma_{in} = 1$ to have steady-state oscillation at the input port and is given as,

$$\frac{1}{\Gamma_s} = \Gamma_{in} = S_{11} + \frac{S_{12}S_{21}\Gamma_L}{1 - S_{22}\Gamma_L} = \frac{S_{11} - \Delta\Gamma_L}{1 - S_{22}\Gamma_L} \tag{16}$$

Where, $\Delta = S_{11}S_{22} - S_{12}S_{21}$. Γ_L after solving is

$$\Gamma_L = \frac{1 - S_{11}\Gamma_S}{S_{22} - \Delta\Gamma_S} \tag{17}$$

Γ_{out} can be given as

$$\Gamma_{out} = S_{22} + \frac{S_{12}S_{21}\Gamma_S}{1 - S_{11}\Gamma_S} = \frac{S_{22} - \Delta\Gamma_S}{1 - S_{11}\Gamma_S} \tag{18}$$

This shows that $\Gamma_L\Gamma_{out} = 1$, and therefore $Z_L = -Z_{out}$. Hence, oscillation condition at the load network is satisfied.

4 Voltage Controlled Oscillators

The voltage controlled oscillator (VCO) is an oscillator whose frequency at the output can be varied by tuning DC control voltage. A Major theoretical aspect of VCOs is discussed in this chapter.

4.1 Functional Block Concept

A simple functional block diagram of VCO is shown in Figure 9 along with sinusoidal output voltage both in frequency and time domain.

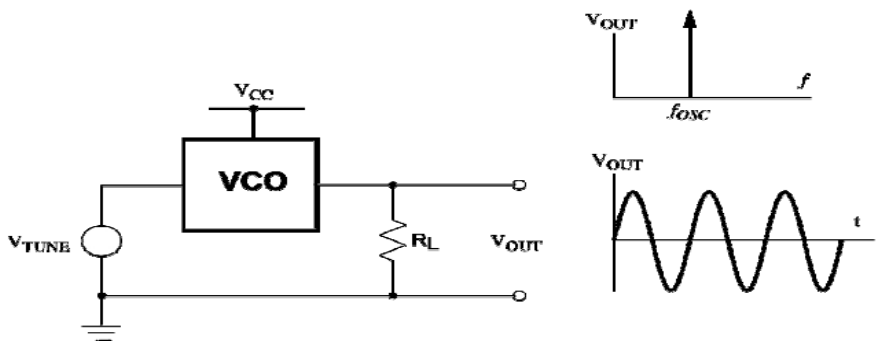

Figure 9. VCO Functional block with output voltage both on time and frequency domain. [7]

The output signal of VCO would be ideally a pure sinusoidal waveform in the time domain as shown in Figure 9, which is like a basic oscillator. Meanwhile, in frequency domain, it would depict an ideal impulse (delta function) at oscillation frequency, f_{osc} .The peculiar feature of a VCO is that the tuning of DC voltage, $V_{TUNE,}$ varies the frequency at the output. The relationship between the tuning voltage and output oscillation frequency is very linear in an ideal case of VCO, which is seen in Figure 10.

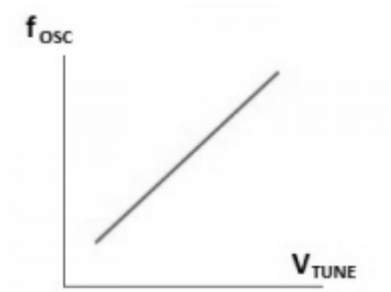

Figure 10. Tuning voltage vs oscillation frequency. [7]

4.2 Applications of VCO

Typically, VCOs are applied in pulse (PM) modulators, frequency (FM) modulators and phase locked loops (PLL). They can be used as variable frequency signal generator itself for different other applications. [8] The VCO involved in PLL is shown in Figure 11. PLL is an electronic circuit where output frequency of VCO is locked with the required input frequency with constant comparison of phase between the input and output frequency of the VCO. Basically, it involves the constant matching of output frequency of VCO with the input frequency. The PLL is used for signal generation and signal modulation or de-modulation, for example, in frequency and amplitude modulation. [9]

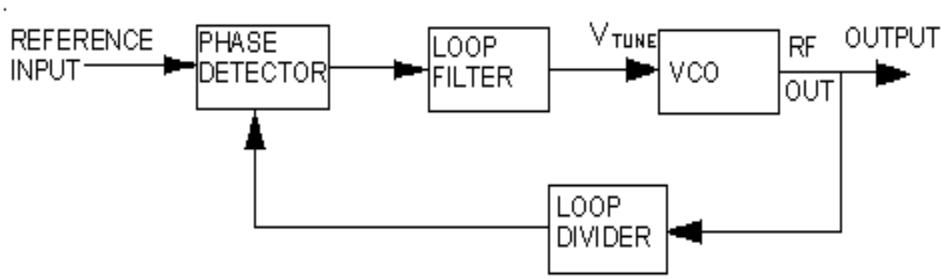

Figure 11. Block diagram of a Phase Locked Loop [9]

In the block diagram shown in Figure 11, comparison between output and input frequency is carried out by phase detector. The reference signal is usually derived from a crystal controlled oscillator. The error signal is generated in case of any mismatch, which after getting filtered by low pass filter activates the VCO to generate output frequency. This output frequency after being divided by a certain number N at loop divider, goes back to phase detector. [9]

4.3 Frequency Pushing and Pulling of VCO

Oscillators, like any other electronic circuits, come up with various problems, for instance, spurs, phase noise and frequency drift, and two others more, namely, frequency pushing and frequency pulling. This section focuses more on these problems and their minimization techniques.

4.3.1 Frequency Pushing

Typically, every VCOs are supplied with DC voltage source to power up the circuit. Unfortunately, the operating frequency of the oscillator is sensitive to the supply voltage and any changes in supply voltage affects the output frequency. The phenomenon is called frequency pushing and may result in phase noise degradation as frequency modulation of the oscillator takes place due to power supply noise. It is given in Hz/V or Hz/mV and can be either positive or negative. As an example, if frequency pushing of an oscillator is given as -100 Hz/mV and when its power supply is increased by 30 mV, then the operating frequency becomes

$$(30\text{mV})\ (-100\text{Hz/mV}) = -3000\ \text{Hz}$$

It means that the operating frequency will drop by 3 kHz.

The frequency pulling effect can be minimized by following two steps

- Using a high-Q resonator
- Very good regulation of power supply voltage using voltage regulator [10]

4.3.2 Frequency or Load Pulling

The change in oscillator frequency due to the change in load impedance is generally known as VCO load pulling. This can lead to frequency modulation of the oscillator if the impedance change is dynamic in nature. It can be seen from Figure 12 that as load reflection coefficient (Γ_L) changes, so does the frequency ω_0 as [$\omega_0(\Gamma_L)$]. [10]

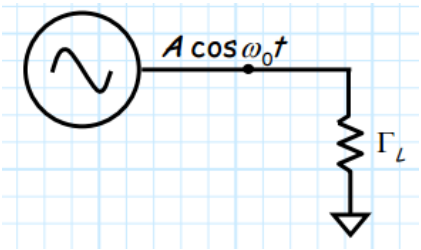

Figure 12. Output of an oscillator connected to load. [10]

The oscillator is designed making sure that the load is matched, so $\Gamma_L = 0$ is the case represented by the defined oscillator frequency. This effect is minimized by isolating the oscillator from the load as shown in Figure 13, for instance, with the help of a buffer amplifier that provide required output power to the matched load. The oscillator frequency will be at its nominal value although the load is not well matched. [10]

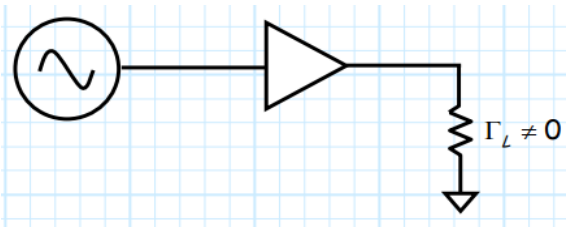

Figure 13. Isolation of oscillator and load using buffer amplifier. [10]

5 Oscillator Design

This chapter presents a design of an oscillator at single frequency of 1 GHz using Microwave Office. It involves steps from designing a DC bias circuit until the final layout of the oscillator.

5.1 Transistor DC Bias Circuit

The first step to design an oscillator involves the selection of transistor that matches the design requirements. Therefore, going through the transistor provided on AWR Microwave Office library, BFR360F from semiconductor manufacturer, Infineon, is selected. According to the datasheet provided by Infineon, BFR360 is a low noise silicon Bipolar RF transistor that supports 5 V supply voltage and eligible for oscillators up to 3.5 GHz. [11]

It is very important to properly bias a transistor with a dc voltage to avoid any unwanted signal modulation or noise injection. Oscillator biasing allows the use of a single Vcc, determines the bias point for a certain class of operation, stabilizes the active device over wide temperature range and cancel out phase noise. [12]

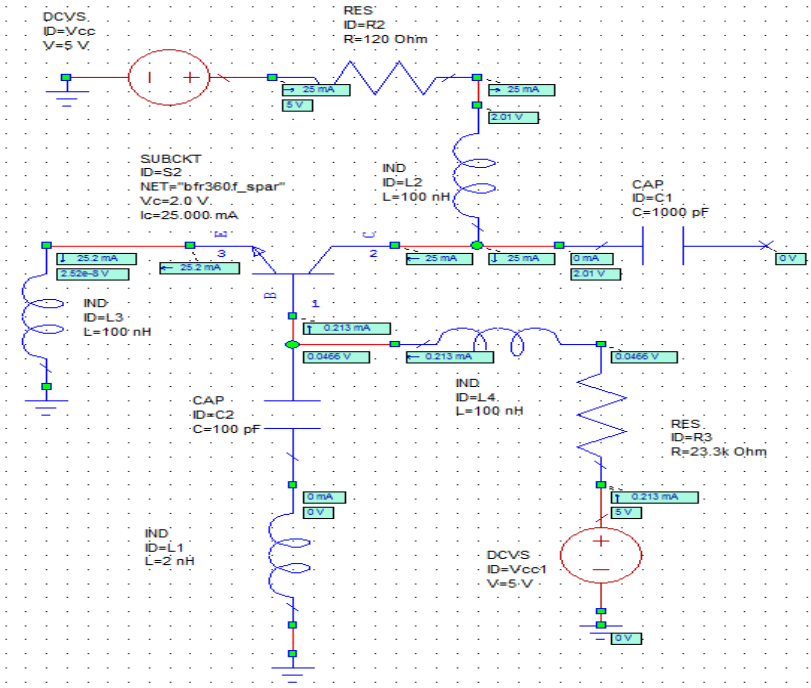

Figure 14. DC biasing circuit of a transistor.

The schematic for biasing circuit used in this design is given in Figure 14. The DC operating point (Q-point) for linear operation of the transistor is given to be $V_{CE} = 2V$ and $I_C = 25\ mA$. The other required parameters is derived from the following equations:

$$V_{CC} = I_C R_C + V_{CE} \tag{19}$$

$$V_{CC} = I_B R_B + V_{BE} \tag{20}$$

$$I_B = \frac{I_C}{\beta} \tag{21}$$

Where,

V_{CC} = supply voltage.

I_c = collector current.

V_{CE} = collector-emitter voltage.

I_B = base current.

V_{BE} = base-emitter voltage.

β = DC current gain.

Radio Frequency Choke (RFC) is a basic inductor applied to choke radio frequencies. It blocks AC current in the RF range while letting DC current to pass through.
Conversely, DC block capacitors allow AC current to pass while blocking the DC component of the signal. As the DC voltage supply and grounds are small signal grounds for RF signal, they are connected to ground.

5.2 Stability Tests

As mentioned earlier, when designing the oscillator, the transistor must be potentially unstable. The S-parameters of the transistor BFR360F are employed to check whether it is stable or not using K – Δ test. The transistor is potentially unstable if Rollet's condition,

$$K = \frac{1 - |S_{11}|^2 - |S_{22}|^2 + |\Delta|^2}{2|S_{12}S_{21}|} < 1 \tag{22}$$

together with auxiliary condition,

$$|\Delta| = |S_{11}S_{22} - S_{12}S_{21} > 1 \tag{23}$$

are well satisfied.

Where,

K = stability factor

Δ = determinant of the scattering matrix

Considering the values of S parameters for common emitter configuration given in Figure 15, at operating frequency of 1 GHz, K is 0.964 and Δ is 0.386. Since, K<1 and Δ <1, the transistor is said to be conditionally stable as this does not satisfy one of the required conditions.

```
VAR Vc =    2.0 V
VAR Ic = 25.000 mA
BEGIN ACDATA
# AC ( GHZ  S  RI  R  50  FC  1  0  )
%F   n11x n11y n21x n21y n12x n12y n22x n22y
0.0100     0.574362   -0.071541  -41.763549 3.213530   0.000272   0.001779   0.964312   -0.033675
0.0200     0.578791   -0.094781  -41.339544 4.710046   -0.000493  0.003263   0.952813   -0.085036
0.0500     0.510359   -0.261164  -38.553459 11.273820  0.000748   0.007764   0.903514   -0.215247
0.1000     0.339369   -0.422089  -31.498210 18.185500  0.004621   0.014480   0.764391   -0.358067
0.1500     0.156783   -0.485408  -23.818117 21.146714  0.008642   0.018037   0.615809   -0.415368
0.2000     0.017875   -0.487472  -17.814339 21.305711  0.011147   0.021141   0.503456   -0.419464
0.2500     -0.084894  -0.453625  -13.330442 20.216676  0.012977   0.023220   0.410266   -0.397575
0.3000     -0.163427  -0.419168  -10.063441 18.768238  0.014727   0.026136   0.349047   -0.374307
0.4000     -0.261718  -0.342313  -5.961930  15.945907  0.017031   0.030348   0.265791   -0.320147
0.5000     -0.313504  -0.281291  -3.711638  13.567465  0.018848   0.034713   0.227510   -0.277963
0.6000     -0.350970  -0.231422  -2.295824  11.701915  0.020199   0.039988   0.195230   -0.247205
0.7000     -0.372932  -0.191661  -1.444199  10.276012  0.021026   0.044481   0.175412   -0.221315
0.8000     -0.385995  -0.157522  -0.830466  9.125289   0.021716   0.049004   0.161250   -0.203447
0.9000     -0.400018  -0.125358  -0.428056  8.167791   0.022104   0.054163   0.149404   -0.187826
1.0000     -0.404309  -0.105315  -0.142234  7.407635   0.023535   0.060053   0.147236   -0.177347
1.1000     -0.414722  -0.079112  0.117943   6.756971   0.024261   0.065235   0.135240   -0.168807
1.2000     -0.419163  -0.061149  0.282339   6.217593   0.025256   0.069769   0.126187   -0.159780
1.3000     -0.423413  -0.040024  0.432927   5.757747   0.026540   0.075363   0.123049   -0.155250
1.4000     -0.425958  -0.026799  0.523337   5.337405   0.026793   0.079613   0.118074   -0.154434
1.5000     -0.430471  -0.010520  0.629298   4.981408   0.027873   0.085785   0.113119   -0.150661
1.6000     -0.432068  0.005279   0.697069   4.664199   0.029163   0.090833   0.108170   -0.145121
1.7000     -0.437459  0.014512   0.748767   4.380466   0.030328   0.095605   0.101275   -0.141982
1.8000     -0.441422  0.030867   0.802924   4.130687   0.031051   0.100932   0.097820   -0.140745
1.9000     -0.438019  0.040634   0.844454   3.905754   0.032482   0.106245   0.094903   -0.143928
2.0000     -0.438177  0.050699   0.876029   3.705865   0.033140   0.111165   0.089488   -0.142655
```

Figure 15. S parameters of transistor BFR360F

The degree of instability of the transistor is increased by converting common emitter configuration into common base configuration and connecting a 2nH inductor in series with the base for positive feedback, as shown in Figure 16. The new S parameters with this configuration will be $S_{11} = 1142\angle 169.2°, S_{12} = 0.1337\angle 165.4°, 2.096\angle -17.08°\ and\ S_{22} = 1.13\angle -14.81°$. This results in K value of -0.993 and Δ value of 1.012∠156.07°.

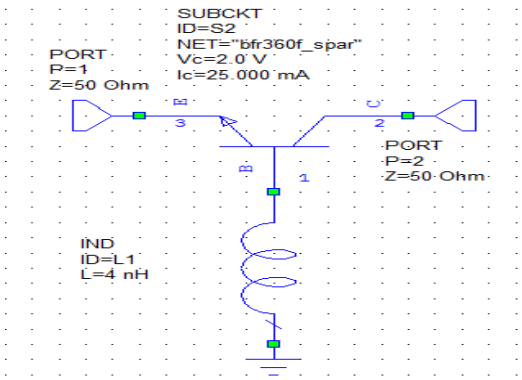

Figure 16. Common base configuration with inductor in series.

5.3 Stability Circles

When both the input and output stability circles are totally outside the Smith chart, the transistor is said to be unconditionally stable. Since, the oscillator demands instability the configuration shown in Figure 16 increases the unstable area inside the Smith chart as shown in Figure 17. Furthermore, as S_{11} or S_{22} values are greater than 1 and the output stability circle covers the centre of the smith chart, the whole chart is unstable region.

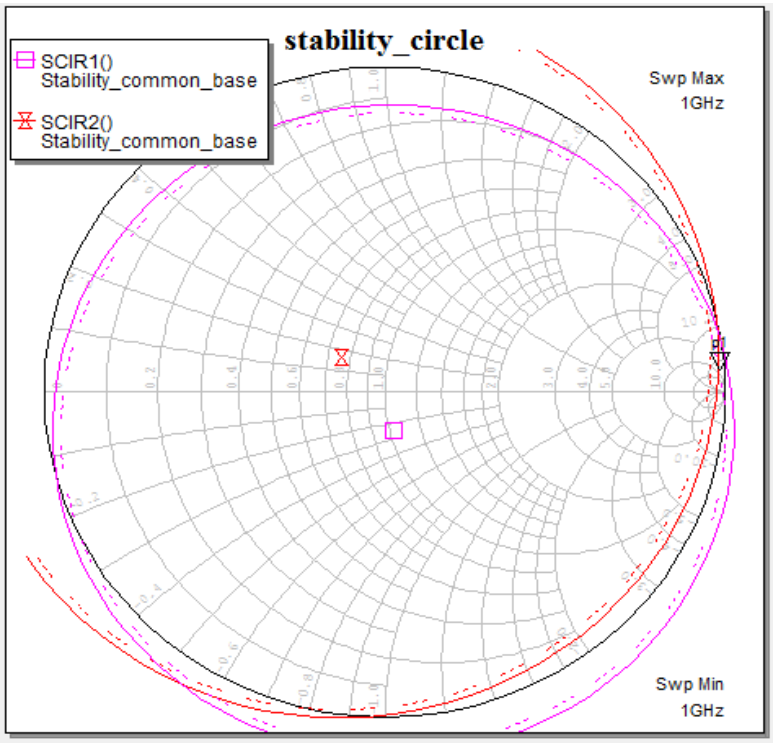

Figure 17. Smith chart showing input and output stability circle in the left.

5.4 Load Matching Network Design

After the unstable region of the Smith Chart is determined, Γ_L is selected in the unstable region to get maximum Γ_{in}. The selected $\Gamma_L = 0.82\angle 12°$ that will give $Z_L = 240 + j250$ where output matching network with lumped component method is designed to match 50 Ω load to conjugate of Z_L as shown in Figure 17. For the selected value of Γ_L, Γ_{in} can be calculated as

$$\Gamma_{in} = S_{11} + \frac{S_{12}S_{21}\Gamma_L}{1 - S_{22}\Gamma_L} = 3.584\angle 140.83°$$

That gives, $$Z_{in} = -30.52 + j11.67$$

Then from (14) and (15), Z_R can be calculated as

$$Z_R = -\frac{R_{in}}{3} - jX_{in} = 10.17 - j11.67$$

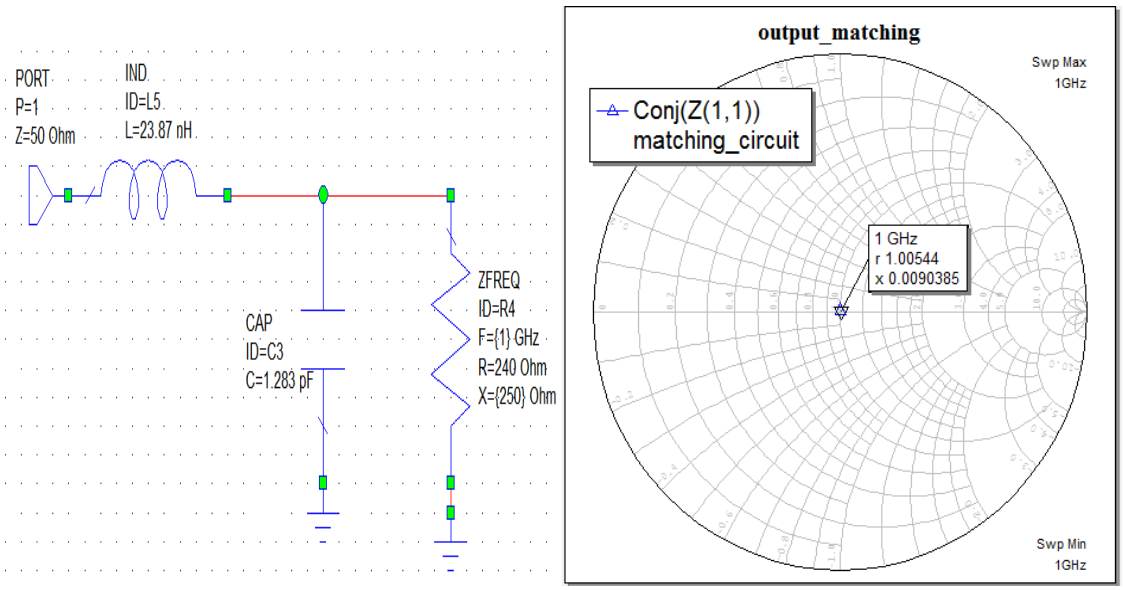

Figure 18. Output matching circuit and smith chart showing it.

5.5 Final Oscillator Design Circuit

After the design of output matching circuit and resonator impedance on AWR microwave office, the oscillator circuit is finally completed together with biasing circuit from Figure 14, which is shown in Figure 19. The figure shows the schematic diagram without the microstirp lines. The design with microstrip lines is shown in Figure 20, whereas the 3D version of the design is shown in Figure 21.

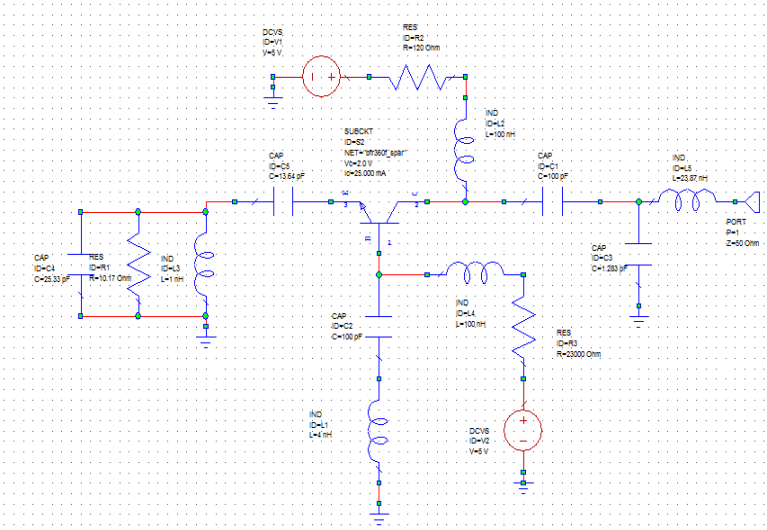

Figure 19. Oscillator schematic diagram without microstrip lines.

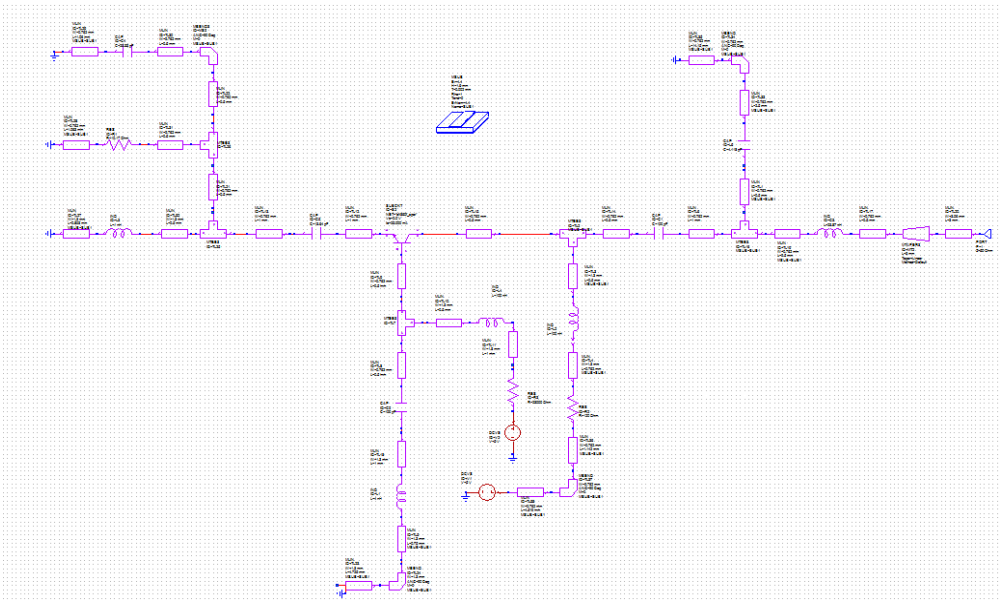

Figure 20. Oscillator schematic diagram with microstrip lines.

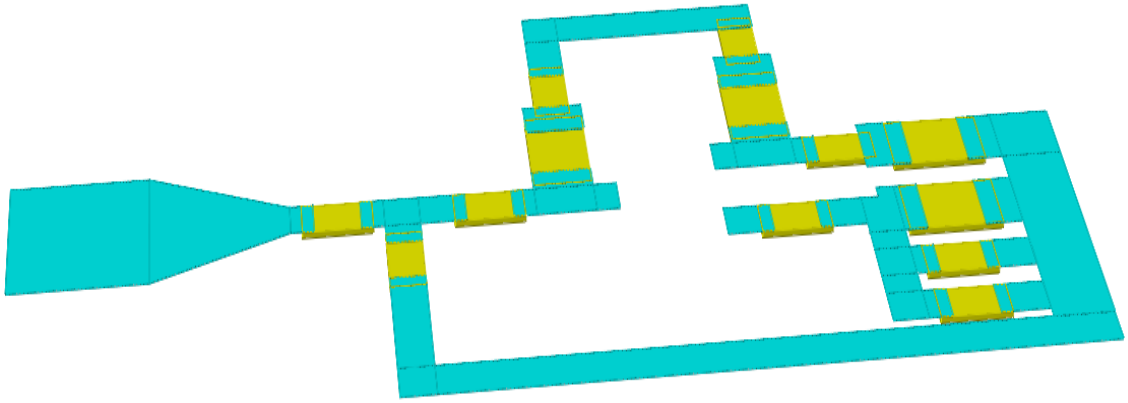

Figure 21. 3D layout view of Oscillator schematic diagram.

5.6 Simulation Result of the Oscillator

Finally, the simulation result using AWR Microwave office is presented in Figure 22. The oscillator design meets the intended goal which is to obtain the stable output frequency of 1GHz. The amplitude of the output voltage is 1.244 V.

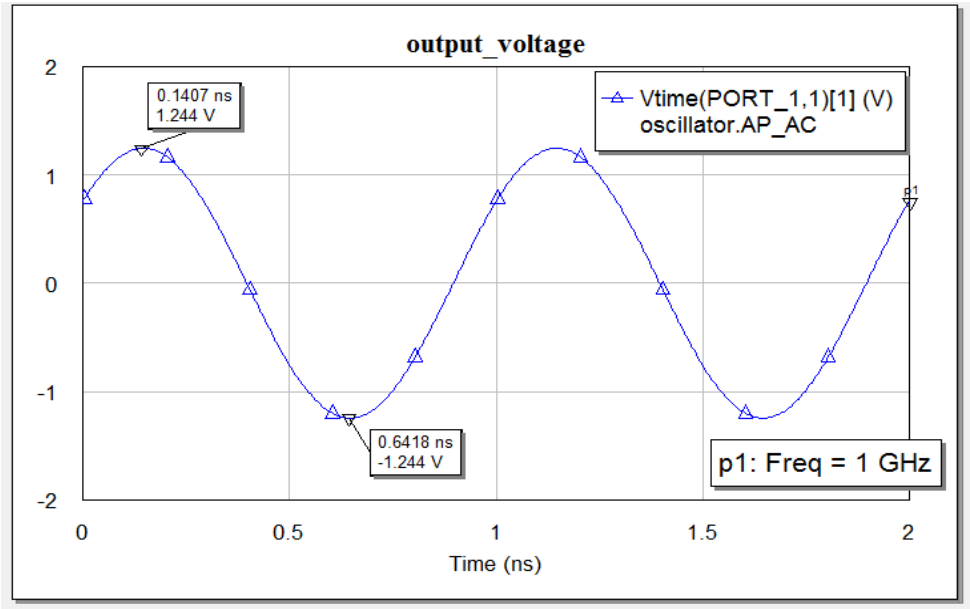

Figure 22. Output voltage waveform of designed oscillator.

With this chapter, the oscillator part of the report is completed. The next chapters will present another part of the project concerning antenna design starting from the basic understanding to actual design and fabrication.

6 Antenna Fundamentals

As defined by Webster's Dictionary, an antenna is "usually a metallic device (as a rod or wire) for radiating or receiving radio waves." Simply, the antenna is just a medium that acts as a transition between free-space and guided wave on a transmission line. The information or electromagnetic (EM) energy can be transferred from a source of transmission to the antenna, which is known as transmitting antenna, or from the antenna to the receiver, which is called receiving antenna. The information being carried has certain frequencies of the electromagnetic waves, also known as radio frequency bands. This electromagnetic spectrum is considered one of the greatest natural resources and the antenna has been a great tool in harnessing this resource. [13] [4]

In radio wave, an electric and magnetic field travel being perpendicular to each other in the propagating direction, which is shown in Figure 23. An antenna is employed to create this electromagnetic field. The transmitter develops the signal to be radiated by the antenna, which is sent via transmission line, usually coaxial cable. An electric field is developed around the antenna elements by the signal voltage whereas current flow in the antenna develops magnetic field. The combinations of both fields and the regeneration of one another produce combined waves and gets launched from the antenna to travel through space. A voltage is induced by the EM wave in the receiver antenna and converts the wave back into an electrical signal that can be further processed. [14]

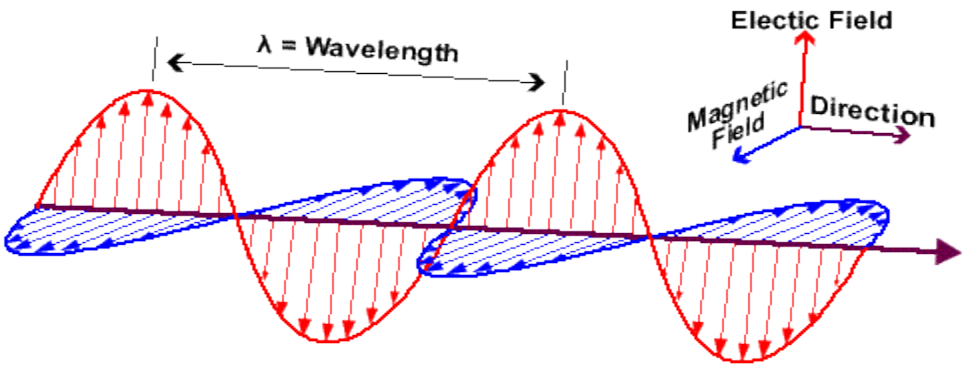

Figure 23. Electric and magnetic field travelling in the direction of propagation.

The need for antennas is realized in the situation where the use of transmission line for transporting electromagnetic energy does not seem practical. Generally, transmission

lines are practical for short distances and at low frequencies. The use of antenna is preferred as the signal attenuates with increase in both frequency and distance and the use of transmission lines becomes expensive. High frequencies are given importance due to the bandwidth they possess. However, transmission lines are highly unlikely to encounter any sort of interference in radio system and laying of new cable comes up with added bandwidth. [13]

The following sections will present some of the basic parameters to understand antenna principle. Some of them include radiation pattern, directivity and gain, antenna impedance, radiation efficiency and antenna polarization.

6.1 Radiation Pattern

A radiation pattern is a graphical representation of the radiation properties of the antenna. Generally, the radiation pattern is dealt in the far-field area and is represented as a function of the directional coordinates. Furthermore, power flux density, radiation intensity, field strength, directivity, phase or polarization comprise radiation properties. [15]

If the radiation pattern is identical in every direction, then the pattern is called isotropic. However, no antennas are isotropic as they only exist in theory, not in practice, but are often taken as a reference when comparing with real antennas. If the radiation pattern is isotropic in a single plane or direction, then it is described as omnidirectional pattern. A directional antenna is the one that has electromagnetic waves radiating or receiving more effectively in some direction than in others. [14] Figure 24 shows the radiation pattern in horizontal and vertical orientation respectively of a half-wavelength dipole antenna.

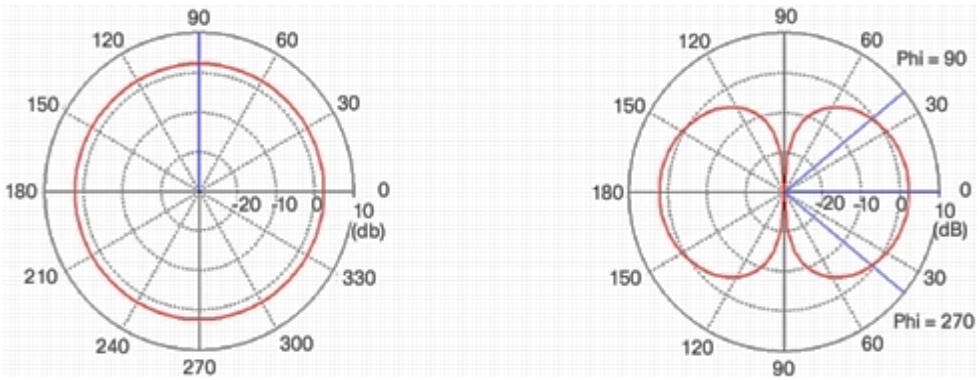

Figure 24. Horizontal and vertical radiation pattern of a half-wave dipole antenna.

6.2 Radiation Power Density

The electromagnetic fields relate energy and power to each other as electromagnetic waves are utilized to carry signal wirelessly or via a guiding structure. The power involved in an EM wave is defined by the instantaneous Poynting vector as

$$\mathbf{S} = \mathbf{E} * \mathbf{H} \tag{24}$$

Where bold letters represent vectors and

S = Poynting vector (W/m^2)

E = Electric-field vector (V/m)

H = Magnetic-field vector (A/m) [15]

6.3 Radiation Intensity

Radiation intensity in a certain direction is defined as “the power radiated from an antenna per unit solid angle.” It is dealt in the far-field region and is generated by multiplying the radiation density with the square of the distance. It can be stated in mathematical form as

$$U = r^2 W_{rad} \tag{19}$$

Where,

U = Radiation intensity (W/unit)

W_{rad} = Radiation density (W/m^2)

6.4 Beamwidth

The antenna pattern is directly related to beamwidth, which is simply the angular separation between two similar points on the opposite side of the largest pattern. Several beamwidths are included in an antenna pattern and among them Half-Power Beamwidth (HPBW) is widely used. Per IEEE, HPBW is defined as “in a plane containing the direction of the maximum of a beam, the angle between the two directions in which the radi-

ation intensity is one-half value of the beam." First-Null Beam width (FNBW) is the important beamwidth and it is the angular separation between the first nulls of the pattern. HPBW and FNBW, both are shown in Figure 25. [15]

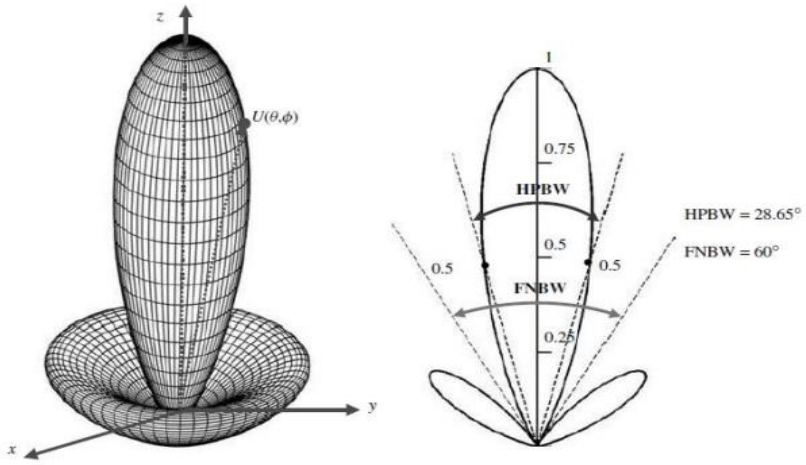

Figure 25. 3D and 2D power pattern showing beamwidth. [15]

6.5 Directivity and Gain

A parameter entailing how much energy is concentrated in a certain direction with respect to other direction is a very important information for an antenna. This feature of an antenna is represented by directivity and is equivalent to the power gain for the 100 percent efficient antenna. Power gain is usually defined with respect to the reference, for instance half-wavelength dipole or isotropic radiator. [13]

The directivity of a non-isotropic source is equal to the ratio of its radiation intensity in a certain direction to that of an isotropic source. Mathematically, it can be presented as

$$D = \frac{U}{U_0} = \frac{4\pi U}{P_{rad}} \tag{26}$$

The direction giving maximum radiation intensity or maximum directivity is chosen when the direction is not mentioned, which is expressed as

$$D_{max} = D_0 = \frac{U|_{max}}{U_0} = \frac{U_{max}}{U_0} = \frac{4\pi U_{max}}{P_{rad}} \tag{27}$$

Where,

D = directivity (dimensionless)

D_0 = maximum directivity (dimensionless)

U = radiation intensity (W/unit solid angle)

$\mathrm{U_{max}}$= maximum radiation intensity (W/unit solid angle)

U_0 = radiation intensity of isotropic source (W/unit solid angle)

$\mathrm{P_{rad}}$= total radiated power (W) [15]

Even though the antenna gain is relatively close to the directivity, antenna efficiency along with directional capabilities are also considered. Power gain is the parameter that tells how efficient is the antenna to convert power available at the input terminals to radiated power. [13]

In a given direction, antenna gain is defined as “the ratio of its radiation intensity to that of an isotropic antenna radiating the same total power as accepted by the real antenna” [16]. The equation for the antenna gain is stated as

$$G = 4\pi \frac{radiation\ intensity}{toatl\ input\ (accepted) power} = 4\pi \frac{U(\theta, \emptyset)}{P_{in}}\ (dimensionless) \tag{28}$$

The gain can be expressed in the following equation in relation with antenna radiation efficiency (e_{cd}) and directivity (D) as

$$G(\theta, \emptyset) = e_{cd} D(\theta, \emptyset) \tag{29}$$

6.6 Antenna Impedance and Mismatch Loss

An antenna offers certain impedance at its terminals, which is called antenna impedance. In other words, it is the ratio of the voltage to current at terminals or the ratio of the suitable elements of the electric to magnetic fields at a point. [15]

The equivalent transmitter circuit along with its related antenna is shown in Figure 26. A radiation resistance R_s and a loss resistance R_r comprise two resistive parts. The real power emitted by the antenna is the power dissipated in the radiation resistance, and the loss resistance or the ohmic loss is the power lost within the antenna itself. The ohmic

losses are negligible in most cases when compared to radiation losses. However, electrically small antennas which have dimensions much less than a wavelength, possess significant ohmic losses. The conducting or the dielectric parts of the antenna is responsible for the losses. [13]

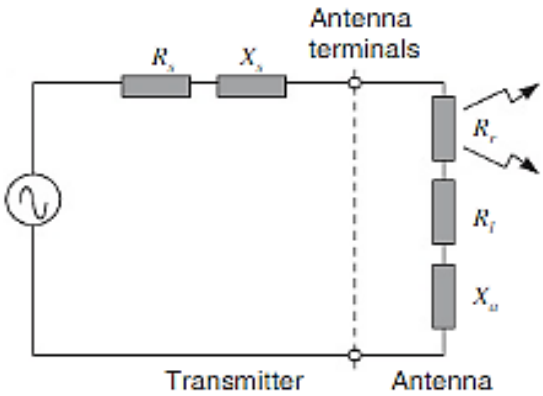

Figure 26. Equivalent circuit of transmitting antenna. [16]

"Ratio of total power radiated to the power accepted by the antenna" is called radiation efficiency, which is given as

$$e = \frac{Power\ radiated}{Power\ accepted\ by\ antenna} = \frac{R_r}{R_r + R_l} \tag{30}$$

A radiation resistance is high compared with the losses in an antenna having high radiation efficiency. The antenna resonates if its input reactance $X_a = 0$. If the source impedance, $Z_s = R_s + jX_s$, and the total antenna impedance, $Z_a = R_i + R_l + jX_a$, are complex conjugates, that is $Z_s = Z_a{}^*$ then there is a matching between the source and the antenna followed by maximum delivery of source power to the antenna. [16]

When there is mismatch between the input antenna impedance and the transmission line due to discontinuity, leading from the transmitter to the receiver, the power gets reflected, thus degrading the system. The measurement of input impedance is done based on characteristic impedance or line of transmission of the source. When there is mismatch between these two, reflection of voltage waves takes place as reflection coefficient, Γ.

$$\Gamma = \frac{Z_{in} - Z_0}{Z_{in} + Z_0} \tag{31}$$

Here, Z_{in} and Z_0 simultaneously refer to the input impedance of the antenna and characteristic impedance of the transmission line. The two travelling waves, incident and reflected, generate a standing wave called voltage standing wave ratio (VSWR) on a transmission line as

$$V_{max} = (1 + |\Gamma|)V_i \tag{32}$$

$$V_{min} = (1 - |\Gamma|)V_i \tag{33}$$

$$VSWR = \frac{V_{max}}{V_{min}} = \frac{1 + |\Gamma|}{1 - |\Gamma|} \tag{34}$$

The magnitude of Γ is used as a complex phasor as all the terms in equation 19 are complex numbers. The reflected power and the incident power are given by $V_i^2|\Gamma|^2/Z_0$ and V_i^2/Z_0 simultaneously. Therefore, returned power ratio or return loss is defined as the ratio of reflected power to the incident power and is given as $|\Gamma|^2$. In decibels (dB), return loss can be expressed as

$$RL_{dB} = 10log_{10}\frac{P_i}{P_r} \tag{35}$$

The relation between reflection coefficient and return loss can be formed as

$$RL_{dB} = -10log_{10}|\Gamma|^2 = -20log\,|\Gamma| \tag{36}$$

6.7 Bandwidth

Antenna bandwidth refers to its capability of operating over a wide range of frequency. IEEE defines bandwidth as “the range of frequencies within which the performance of the antenna, with respect to some characteristic, confirms to a specified standard.” It is regarded as the frequency range, on both sides of a centre frequency (normally the resonance frequency in case of a dipole), where the antenna features such as input impedance, radiation pattern, beamwidth, polarization, gain, direction of beam and radiation efficiency lie under an acceptable value of those at centre frequency. [15]

Bandwidth is normally defined as “the range over which power gain is maintained to within 3 dB of its maximum value, or the range over which the VSWR is no greater than

2:1, whichever is smaller". It is normally expressed as a percentage of the nominal operating frequency. There is a dramatic change in radiation pattern outside the specified operating bandwidth of an antenna. [16]

Bandwidth is one of the key factors when choosing the right type of antenna as there are both broadband and narrowband antennas. Broadband or wideband antennas are the ones whose bandwidth is normally defined as the ratio of higher to lower frequencies of acceptable operation. Meanwhile, bandwidth of narrowband antennas is expressed as a percentage of difference in frequencies over the centre frequency of the bandwidth.

For broadband antenna,

$$BW = \frac{f_u}{f_l} \tag{37}$$

For narrowband antenna,

$$BW(\%) = \frac{f_u - f_l}{f_c} \tag{38}$$

Where,

f_u = upper frequency, f_l = lower frequency and f_c = centre frequency.

6.8 Polarization

Polarization is simply defined as the orientation of electric field of an electromagnetic wave. On absence of information for direction, the polarization is assumed to be in the direction with maximum gain. Practically, different parts of the pattern may have different polarizations as there is a variation of polarization of the radiated energy with the direction from the centre of the antenna. [15]

Figure 27. Different types of antenna polarization. [13]

The polarization is generally described by an ellipse, which is the figure traced by the electric field. As shown in the figure 27, it can be divided into linear, circular, or elliptical, where linear and circular polarizations are special cases of elliptical polarization. Furthermore, if the electric field vector remains in the similar plane all the time, then it is said to be linear polarization. Vertical and horizontal polarizations comprise of linear polarization. The reflections over the transmission path has less effect on vertically polarized radiation, whereas, the reflections cause variation in received signal strength with horizontal polarization. When the electric field vector revolves around a circular path with constant length, it is circularly polarized. [13]

7 Microstrip Antenna

Microstrip antennas are the antennas designed on printed circuit board (PCB) using printed-circuit fabrication technology where the part of the metallization layer is responsible for radiation. These antennas are used in places where cost, size, weight, performance and installation comfort are constraints. These are low profile simple and inexpensive antennas designed on planar and nonplanar surfaces with modern printed-circuit technology. The selection of shape and mode for designing such antennas offer versatility to impedance, resonant frequency, pattern and polarization. Furthermore, loads when added between the patch and the ground plane, for instance, varactor diodes and pins, help design adaptive elements with variable resonant frequency, impedance, polarization ad pattern. [15]

However, microstrip antennas comprise of several operative drawbacks, such as, low power, low efficiency, high Q, poor polarization purity, poor scan performance, spurious feed radiation and very narrow bandwidth of few percent. Therefore, these antennas are used in places where narrow bandwidths are required. The bandwidth can be extended along with the efficiency when the height of the substrate is increased. Nevertheless, surface waves will be introduced when the substrate height is increased and that can withdraw some power from the source to radiate directly. The surface waves can degrade the antenna pattern and polarisation when they pass through the substrate as they will be distributed at twists and discontinuities. Use of cavities can help eliminate these surface waves. Moreover, bandwidth can also be increased by stacking of PCB layers. [15]

The antenna designed in this project is microstrip log-periodic dipole antenna, so this chapter deals about basic characteristics of microstrip antennas. Before digging in the actual topic, the following section presents the basic operating principles of microstrip elements and arrays.

7.1 Microstrip

The transmission lines are used for transporting signals from one point to another with minimal losses. The most common form of transmission line for PCB is microstrip as it is compatible with standard PCB fabrication methods and it provides easy access to components during both assembly and test. [2] A common type of microstrip line is shown in Figure 28(a) with its geometry, where a conductor of width W is etched on a thin, grounded dielectric substrate of thickness d and relative permittivity ε_r. Figure 12(b) represents the electric and magnetic field lines associated with microstrip line. [4]

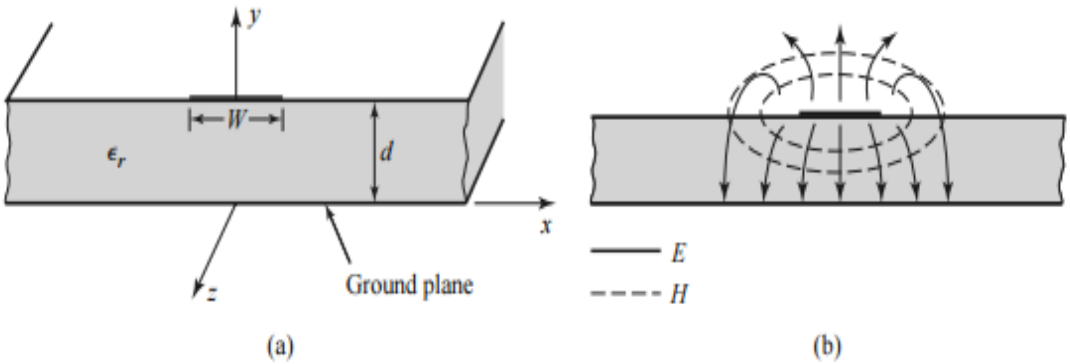

Figure 28. Microstrip transmission line showing geometry (a) and electric and magnetic fields (b). [4]

On absence of dielectric substrate ($\varepsilon_r = 1$), the line would be two parallel wires comprising of a flat conducting strip on top of a ground plane, fixed in a homogeneous medium (air). This would make a simple transverse electromagnetic (TEM) transmission line with phase velocity $v_p = c$ and propagation constant $\beta = k_0$. The waves in the transmission lines are called TEM waves when the electric and magnetic fields direct totally transverse to the direction of propagation, and such types of transmission lines are called TEM lines. [4]

The behavior and analysis of the microstrip line is complicated since the dielectric does not cover the area of the air right above the strip. Usually most of the field lines of the microsrip concentrates in the section of dielectric, lying between the conducting strip and the ground plane, while some portion lies in the air segment above the substrate. This is the reason why the microstrip line is unable to support a pure TEM wave, as the phase velocity of TEM fields in the dielectric region would be $v_p = c/\sqrt{\varepsilon_r}$, but in the air segment, the phase velocity of TEM fields would be c. This makes it impossible for the phase match at the dielectric-air interface to reach for a TEM-type wave. [4]

The dielectric substrate, in most practical applications, is very thin (d<< λ), making the fields quasi-TEM, meaning that the fields are basically the same as those of the static case. Thus, static or quasi-static solutions can provide good approximations for the phase velocity, propagation constant and characteristic impedance and are expressed as,

$$v_p = \frac{c}{\sqrt{\varepsilon_e}} \tag{39}$$

$$v_p = \frac{c}{\sqrt{\varepsilon_e}} \tag{40}$$

Where, ε_e is the effective dielectric constant of the microstrip line. The relation satisfying the effective dielectric constant is 1< ε_e <ε_r, as some of the field lines lie in the dielectric region and some in the air and this is reliant on the substrate thickness, d and conductor width, W. [4]

The effective dielectric constant can be considered as the dielectric constant of a homogeneous medium that substitutes the air and dielectric areas of the microstrip as shown in Figure 13 and can be calculated as

$$\varepsilon_e = \frac{\varepsilon_r + 1}{2} + \frac{\varepsilon_r - 1}{2}\left(1 + 12\frac{h}{W}\right)^{-1/2} \tag{41}$$

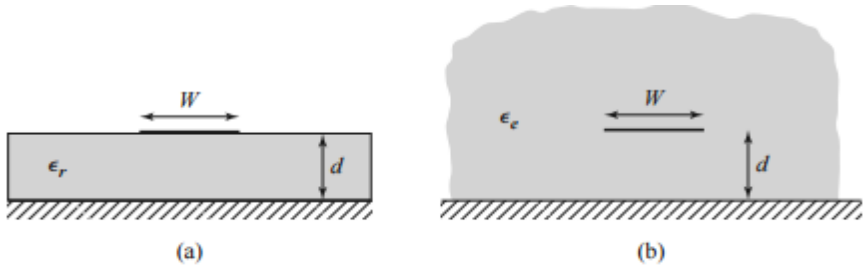

Figure 29. Geometrical effect of effective dielectric constant for the microstripz line. [4]

When the parameters of the microstrip line is given, the characteristics impedance is determined as

$$Z_0 = \begin{cases} \frac{60}{\sqrt{\epsilon_e}} ln\left(\frac{8d}{W} + \frac{W}{4d}\right) & for\ w/d \leq 1 \\ \frac{120\pi}{\sqrt{\epsilon_e}\left[\frac{W}{d} + 1.393 + 0.667ln\left(\frac{W}{d} + 1.444\right) +\right]} & for\ w/d \geq 1 \end{cases} \quad (42)$$

With the given value of dielectric constant ε_r and characteristic impedance Z_0, the W/d ratio can be obtained as

$$\frac{W}{d} = \begin{cases} \frac{8e^A}{e^{2A} - 2} & for\ W/d < 2 \\ \frac{2}{\pi}\left[B - 1 - ln(2B - 1) + \frac{\epsilon_r - 1}{2\epsilon_r}\left\{ln(B - 1) + 0.39 - \frac{0.61}{\epsilon_r}\right\}\right] & for \frac{W}{d} > 2 \end{cases} \quad (43)$$

Where,

$$A = \frac{Z_0}{60}\sqrt{\frac{(\epsilon_r + 1)}{2} + \frac{\epsilon_r - 1}{\epsilon_r + 1}}\left(0.23 + \frac{0.11}{\epsilon_r}\right)$$

$$B = \frac{377\pi}{2Z_0\sqrt{\epsilon_r}}$$

The attenuation due to dielectric loss when considering microstrip as a quasi-TEM line can be found as

$$\alpha_d == \frac{k_0(\epsilon_e - 1)tan\delta}{2\sqrt{\epsilon_e(\epsilon_r - 1)}}\ Np/m \quad (44)$$

Where, tanδ is the loss tangent of the dielectric. The attenuation caused by the conductor loss is presented as

$$\alpha_c = \frac{R_s}{Z_0 W}\ Np/m \tag{45}$$

Where, $R_s = \sqrt{\omega\mu_0/2\sigma}$ is the surface resistivity of the conductor. Despite of some exceptions, conductor loss is more important than dielectric loss for most microstrip substrates. [4]

7.2 Microstrip Patch Antenna

In simple form, a microstrip device is a “layered structure with two parallel conductors separated by a thin dielectric substrate and the lower conductor acting as a ground plane.” The microstrip transmission line is formed when the upper conductor is a long thin strip. Moreover, the device becomes a microstrip antenna when the upper conductor is a patch allowing a portion of wavelength in extent. The patch antenna is a resonant antenna whose resonant behaviour is considered when designing a microstrip antenna to achieve required bandwidth. These antennas are typically used at frequencies from 1 to 100 GHz as their size become too large below UHF. [13]

In Figure 34 (a), a rectangular microstrip antenna is shown having very thin ($t \ll \lambda_0$, where λ_0 is the free-space wavelength) metallic patch placed a small fraction of a wavelength ($h \ll \lambda_0$, usually $0.003\lambda_0 \leq h \leq 0.05\lambda_0$) above a ground plane. The length L of a rectangular patch is usually $\lambda_0/3 < L < \lambda_0 / 2$. [15]

The electric field shown in Figure 30 is associated with the standing wave mode in the dielectric and are perpendicular to the conductors and look like those in parallel plate capacitor. The radiation occurs as fringing fields towards the ends are exposed to the upper half-space. The standing wave mode with a half-wavelength separation between ends results electric fields that are opposite phase on the left and right halves. Thus, total fringing fields at the edges are equal in magnitude and 180° out of phase. [13]

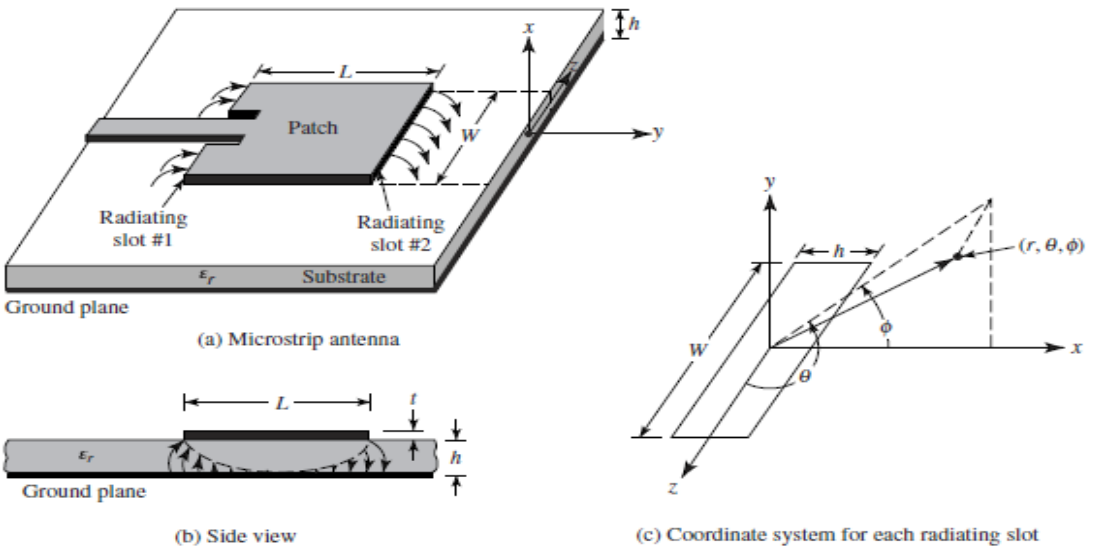

Figure 30. Microstrip antenna and coordinate system. [4]

There are wide range of substrates available for the designing microstrip antennas having their dielectric constants typically in the range of $2.2 \leq \varepsilon_r \leq 12$. Thick substrates with low dielectric constant is better suited for good antenna performance as they provide better efficiency, larger bandwidth, loosely bound fields for radiation into space, but at the expense of larger element size. However, for microwave circuitry thin substrates with higher dielectric constants are desirable as they demand highly bound fields to lower unnecessary radiation and coupling, and therefore results in reduced element size. They are less efficient having comparatively smaller bandwidths and are prone to huge losses. So, good antenna performance and good circuit design cannot be achieved at the same time as microstrip antennas are frequently integrated with another microwave circuitry. [15]

The radiating patch of the antenna and the feed lines are normally photoetched on the dielectric substrate. Different types of radiating patch can be used, for example, square, rectangular, thin strip (dipole), circular, elliptical, triangular and any possible shape. Square, rectangular, dipole and circular are the most common shapes since they are easy to fabricate and analyse and possess low cross-polarization radiation. Microstrip dipole offer large bandwidth and occupy less space. Single elements or arrays of microstrip antennas are employed for linear and circular polarizations. [15]

7.3 Log-Periodic Dipole Array

A log-periodic antenna is a sort of antenna in which physical geometry is maintained in such a way that impedance and radiation properties repeat periodically as the logarithm of frequency. Practically, the changes over operational frequency band is less considerable making log-periodic antennas frequency independent in most cases. Furthermore, log-periodic dipole array is an array of parallel dipole wires connected in series and their lengths are gradually increasing outward from the feed point at the apex. The feed line is lying between the adjacent dipole elements. These antennas are designed to cover wide range of band-width with a suitable level of directivity. [15]

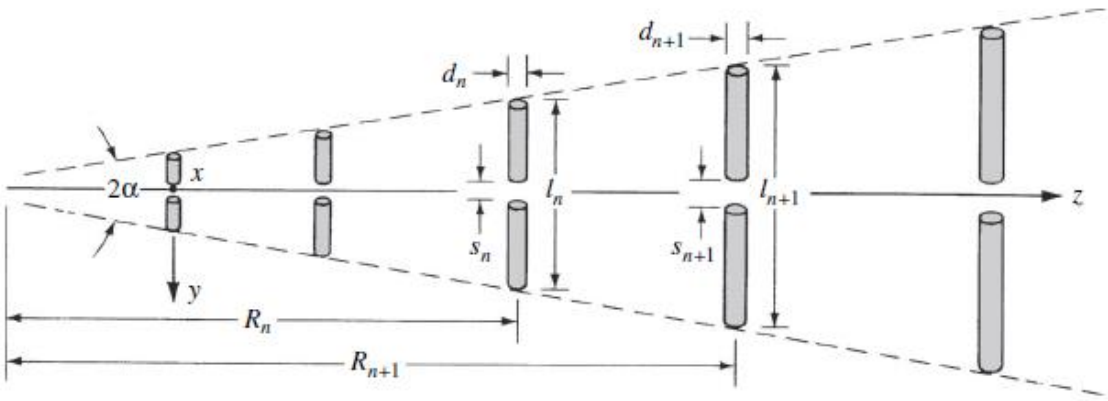

Figure 31. Log-periodic dipole array. [15]

The most commonly used log-periodic antenna configuration developed by Isbell is shown in Figure 31. It includes a sequence of parallel linear dipoles on both sides to form a coplanar array. The angle 2α is made by straight lines passing through the ends of dipole which is totally frequency independent. The directivities for this antenna is smaller than Yagi-Uda array (7-12 dB), however, they can be approached and sustained over much wider bandwidth. Unlike Yagi-Uda array elements, the geometrical proportions of the log-periodic arrays follow certain pattern and its length (l_n's), spacing (R_n's), diameters (d_n's), and gap spacing at the centre of the dipole (S_n's) increase logarithmically as expressed by the geometric ratio τ as follows

$$\frac{1}{\tau} = \frac{l_2}{l_1} = \frac{l_{n+1}}{l_n} = \frac{R_2}{R_1} = \frac{R_{n+1}}{R_n} = \frac{d_2}{d_1} = \frac{d_{n+1}}{d_n} = \frac{s_2}{s_1} = \frac{s_{n+1}}{s_n} \tag{46}$$

The geometric ratio τ explains the period of operation. The geometric ratio defines two frequencies f_1 and f_2 with one period apart as

$$\tau = \frac{f_2}{f_1}, \quad f_2 > f_1 \tag{47}$$

Spacing factor is another important factor related with a log-periodic dipole array and is defined as the ratio of distance between two adjacent elements twice the length of the larger element and is constant for a given antenna. It is given as

$$\sigma = \frac{R_{n+1} - R_n}{2l_{n+1}} \tag{48}$$

8 Design of Printed Log-Periodic Dipole Array

The printed LPDA has been introduced in order to develop a broadband antenna that is capable of performing wide band operations in the wireless communication system and due to its light weight, low production cost and smaller size the applications have even been wider. In this chapter, a number of equations will be presented that are useful in designing parameters for microstrip LPDA of frequency range from 600 to 1300 MHz followed by CST simulation results and discussions. This chapter also includes the results obtained after the fabrication of the antenna and testing it in an anechoic chamber located at electronic department of Metropolia UAS.

8.1 Design Parameters

The design of any antennas in general to meet specific goals is very challenging. Carrel has introduced probably the most practical design procedure for a log-periodic dipole array using a set of curves and nomograms. The design parameters such as geometric ratio τ, half apex angle α, and spacing factor σ, can help describe the general configuration of log-periodic array as

$$\alpha = tan^{-1}\left[\frac{1-\tau}{4\sigma}\right] \tag{49}$$

The calculated outlines of constant directivity (in dB) with respect to σ and τ for log-periodic dipole arrays is shown in Figure 32. When two values in equation 41 are given, the other can be obtained. The apex angle and geometric ratio for typical design of a log-periodic dipole array are characterised by 10° ≤ α ≤ 45° and 0.95 ≥ τ ≥ 0.7 respectively. The corresponding τ values decrease with increase in α and vice-versa. Larger the α values or smaller the τ values, smaller the number of required elements separated by larger distance. Conversely, smaller values of α or larger values of τ results in the larger number of elements that are closer together. This type of design includes more elements in the active region that are about λ/2. As there exists smoother transition between the elements, the differences of the impedance including other features as a function of frequency are reduced, resulting in larger gains. [15]

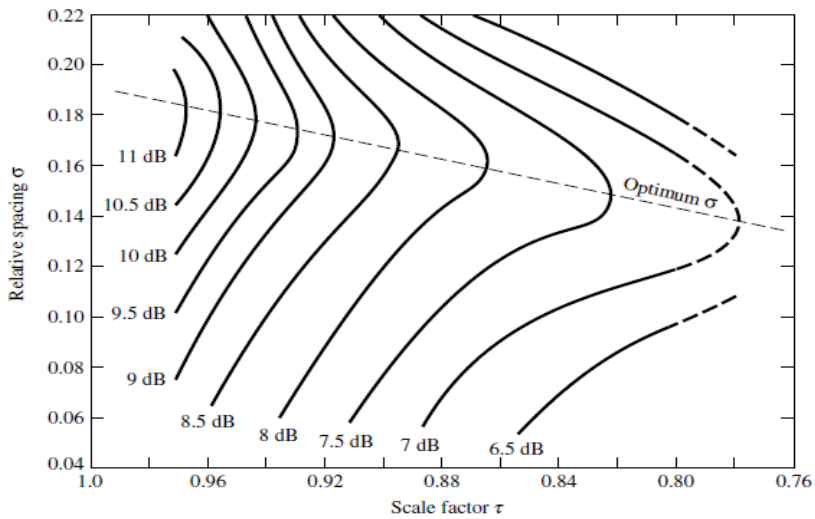

Figure 32. Directivity versus σ and τ for log-periodic dipole arrays. [17]

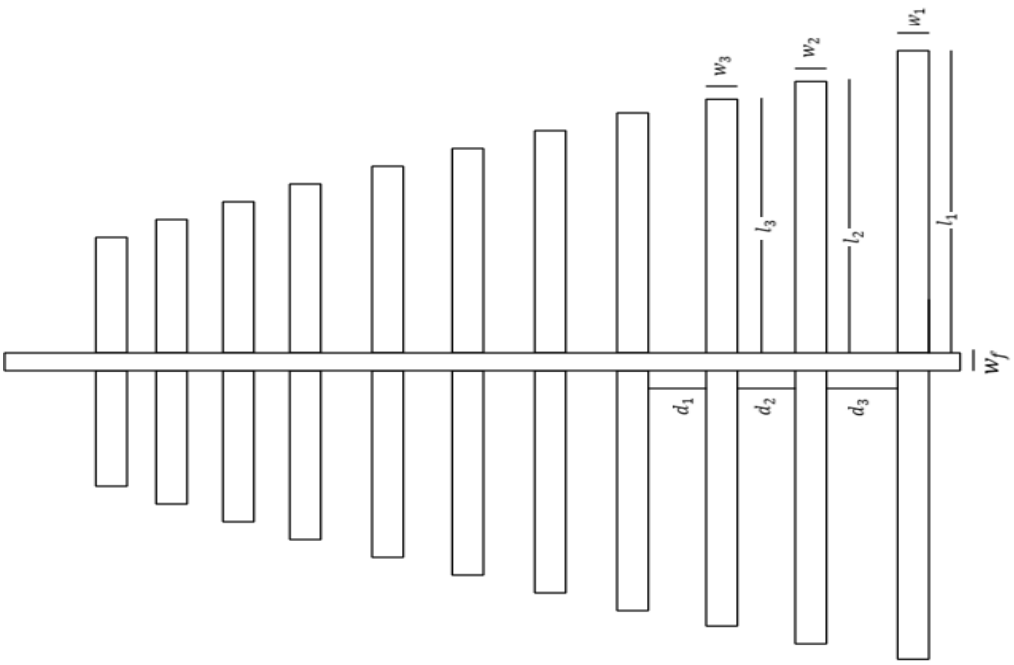

Figure 33. Proposed microstrip LPDA antenna.

The proposed microstrip LPDA is shown in Figure 33 with different required parameters, where top and bottom sides of the PCB will have equal and alternating monopole elements. The longest and shortest lengths of the dipole elements are determined by the bandwidth of the system, whereas, width of the active region relies on a particular design. A semi empirical equation proposed by Carrell is used to derive the bandwidth of the active region B_{ar} associated with α and τ is given as

$$B_{ar} = 1.1 + 7.7(1-\tau)^2 cot\alpha \tag{50}$$

In practice, a slightly larger bandwidth (B_s) is usually designed than the actual one (B) and they are related by

$$B_S = BB_{ar} = B[1.1 + 7.7(1-\tau)^2 cot\alpha \tag{51}$$

Where,

B_S = Designed bandwidth

B = Required bandwidth = $\frac{f_{max}}{f_{min}}$

B_{ar}= Bandwidth of active region

The total length of the structure L, from the shortest (l_{min}) to the longest (l_{max}) element, is given by

$$L = \frac{\lambda_{max}}{4}\left(1 - \frac{1}{B_s}\right) cot\alpha \tag{52}$$

Where,

$$\lambda_{max} = 2l_{max} = \frac{v}{f_{min}} \tag{53}$$

The number of elements from the geometry of the system is given b

$$N = 1 + \frac{ln(B_S)}{ln\left(\frac{1}{\tau}\right)} \tag{54}$$

The relative spacing factor σ can also be calculated as

$$\sigma = \frac{1-\tau}{4tan\alpha} = \frac{d_{n+1}}{4L_n} \tag{55}$$

The length of longest monopole (l_1) which is the quarter wavelength of the lowest frequency is given by

$$l_1 = \frac{\lambda_{effmax}}{4} \tag{56}$$

Where,

$$\lambda_{effmax} = \frac{c}{f_{min}\sqrt{\epsilon_e}} \tag{57}$$

Where c is the speed of light in free space and the ϵ_e is the effective dielectric constant, which is taken similar to that of microstrip line case for ease of calculation and it is given in equation 41. Nevertheless, ϵ_e is slightly adapted in case of microstrip line due to the absence of ground plane but present parameters both values are taken to be approximately the same. [4]

The width of the longest dipole, when the matching impedance is taken as 50 Ω, can be calculated as

$$\mathrm{Z} = 120\left[ln\left(\frac{l_{\mathrm{n}}}{a}\right) - 2.25\ \right] \tag{58}$$

Where, a is the radius of the largest cylindrical dipole. The radius a is chosen to be the largest dipole to obtain a 50 Ω average characteristic impedance. Then the width of equivalent parameter is calculated as

$$W_n = \pi * a \tag{59}$$

When all the required parameters are obtained the length, width and the spacing of each elements are calculated using the following relation that is related with geometric ratio as

$$\tau = \frac{l_{n+1}}{l_n} = \frac{w_{n+1}}{w_n} = \frac{d_{n+1}}{d_n} \tag{60}$$

8.2 Calculation of Design Parameters

Taking Figure 32 into consideration, the geometric ratio and spacing factor chosen for the design are 0.9 and 0.055 respectively. These values are chosen so that more dipole elements can be fit on a PCB and would provide good enough antenna gain as well. From equation (49), the value for half apex angle is found to be 25 degrees. Similarly, when designing for frequency range of 400 MHz to 1000 MHz, equations (45) and (46) give active region bandwidth and designed bandwidth as 1.14 and 2.85 respectively. Furthermore, solving for length of the whole structure from will give 143 mm, where, $\lambda_{max} = 411\ mm$, obtained from lowest frequency 400 MHz and effective dielectric constant $\epsilon_e = 3.33$. The number of dipole elements obtained using Equation 47 is 11. Therefore, 11 dipole elements will be printed on PCB, where all the lengths, widths and spacing are calculated as shown in Table 1.

Table 1. Designed Parameters for the proposed LPDA.

Monopole lengths(mm)	widths(mm)	Spacing(mm)
$l_1 = 102.75$	$w_1 = 12.57$	-
$l_2 = 92.48$	$w_2 = 11.31$	$d_1 = 22.61$
$l_3 = 83.23$	$w_3 = 10.18$	$d_2 = 20.34$
$l_4 = 74.90$	$w_4 = 9.16$	$d_3 = 18.31$
$l_5 = 67.41$	$w_5 = 8.25$	$d_4 = 16.48$
$l_6 = 60.67$	$w_6 = 7.42$	$d_5 = 14.83$

$l_7 = 54.61$	$w_7 = 6.68$	$d_6 = 13.35$
$l_8 = 49.15$	$w_8 = 6.01$	$d_7 = 12.01$
$\mathrm{l}_9 = 44.23$	$\mathrm{w}_9 = 5.41$	$\mathrm{d}_8 = 10.81$
$\mathrm{l}_{10} = 39.81$	$\mathrm{w}_{10} = 4.87$	$\mathrm{d}_9 = 9.73$
$\mathrm{l}_{11} = 35.83$	$\mathrm{w}_{11} = 4.38$	$\mathrm{d}_{10} = 8.76$

9 Design and Simulation on CST

Based on design parameters from the Table 1, the LPDA is designed on a FR4 substrate with height, $\mathrm{h} = 1.6\ \mathrm{mm}$, dielectric constant, $\epsilon_\mathrm{r} = 4.4$ and thickness, $\mathrm{t} = 0.035\ \mathrm{mm}$ using CST studio as shown in

Figure 34. The width of the 50 Ω microstrip feed line, w_f, that runs in the centre of the patch is calculated as 3.06 mm.

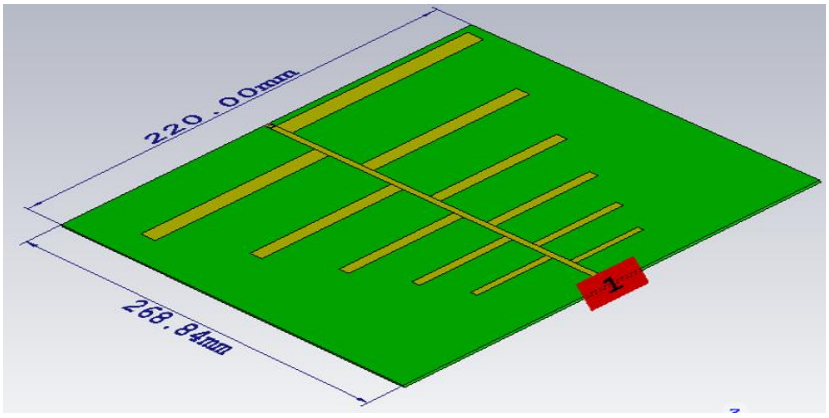

Figure 34. LPDA design on CST studio

The port with red spot shown in Figure 34 is connected to the feed line where female SMA connector is soldered to allow signal. The patch has 11 pairs of parallel elements on both side of the feed line and they are present on both side of the substrate, where top side acts as an antenna and the bottom side acts as the defective ground plane and works as a reflector. The overall size of the board is 268.84 mm*220 mm that is a narrow fit for the PCB.

Figure 35 shows the simulated frequency response of the input reflection coefficient that clearly demonstrates that the designed antenna is a good antenna as the signal is well under -10 dB except one notch at 850 MHz. Figure 36 also shows how good the antenna is as VSWR is well below 2 except for the same notch at 850 MHz. There are various techniques to get the notch below -10 dB but this result is enough for the thesis purpose. The antenna is cleary a wideband with the ragne of 600-1228 MHz though the design is made for 400 MHz to 1000 MHz due to calculated parameters.

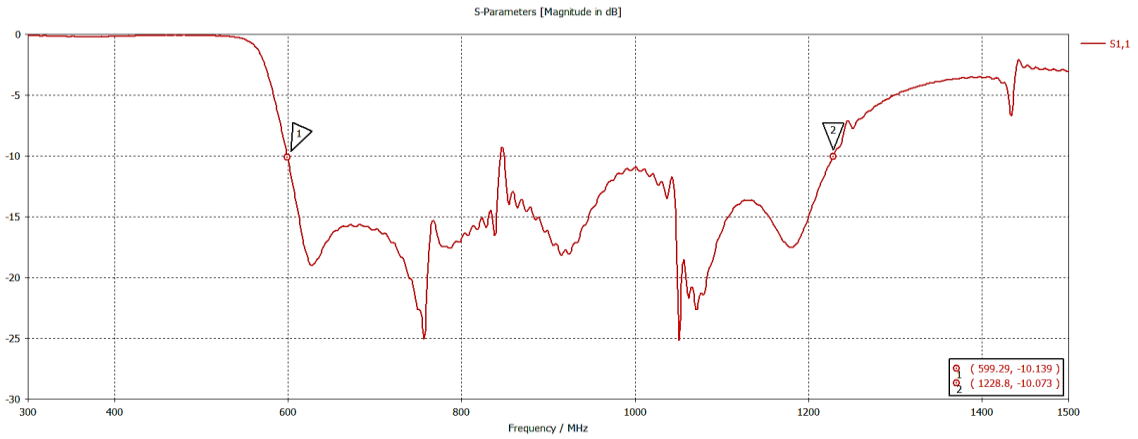

Figure 35. Return loss of designed LPDA.

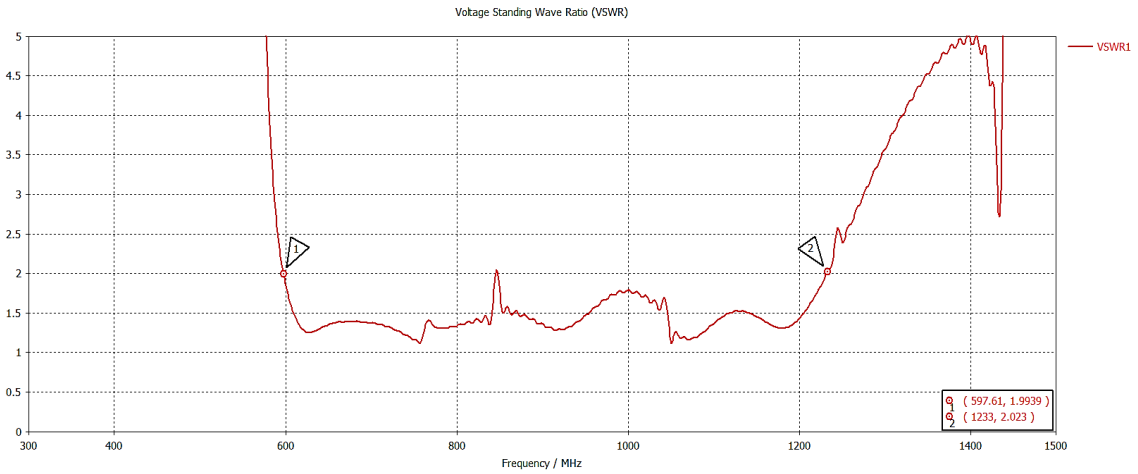

Figure 36. VSWR of designed LPDA.

The simulated radiation pattern obtained in the far field is presented in Figure 37 showing that the directivity of the patch LPDA is 8.09 dBi. The fields are linearly polarized and are in the horizontal direction. The 3D far-field pattern of proposed antenna at 900 MHz is

shown in Figure 38, with a good end-fire radiation characteristic, meaning that maximum radiation is present at major lobe occurring at one end whereas the losses is represented by the minor lobes.

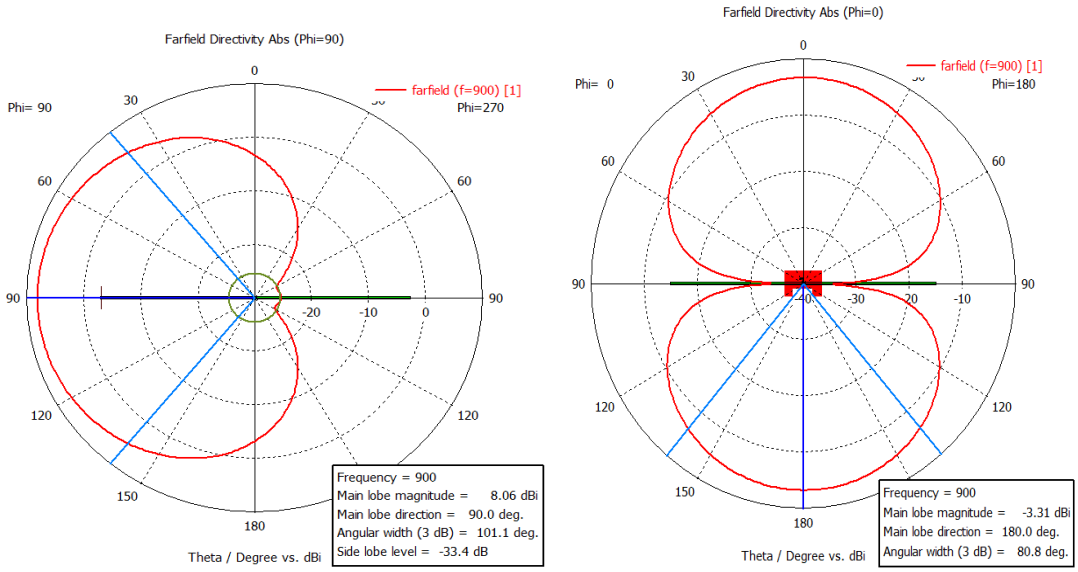

Figure 37. Horizontal radiation patterns at 900 MHz in the far field.

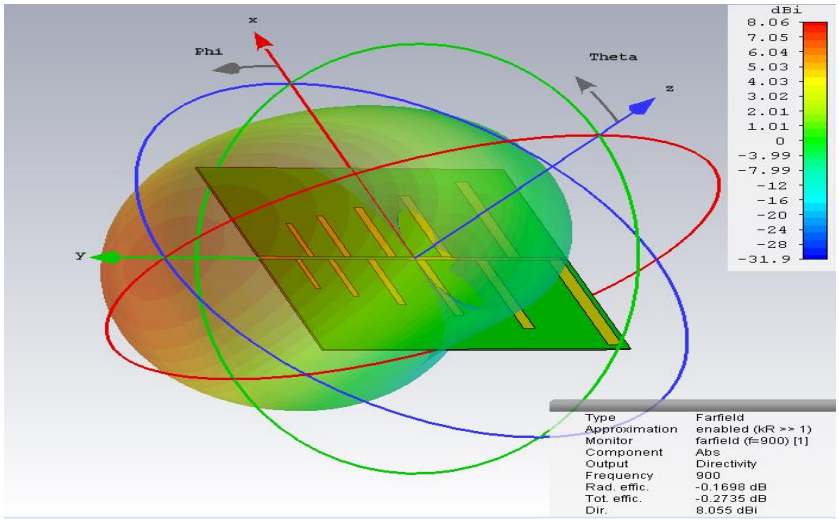

Figure 38. 3D radiation pattern at 900 MHz

When the CST simulated design matched our target antenna requirements, it was further proceeded for fabrication and the final antenna structure can be seen from Figure 39. The SMA connector is soldered at the end of the feed line that is lying towards the end of the smaller elements. The top layer is soldered with signal pin whereas the bottom

layer is soldered with ground pins of the connector. Furthermore, the top and bottom feed line is connected at the end of the larger elements through a via.

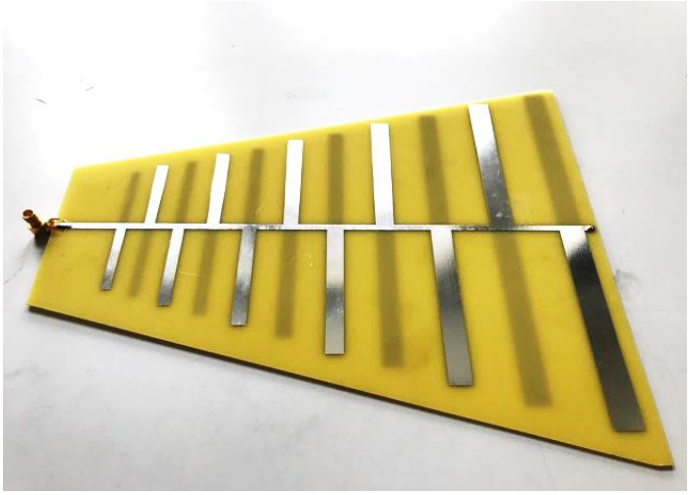

Figure 39. Final printed LPDA antenna.

10 Measurements and Results

In this chapter, the measurements and results are presented after the testing of the antennas in an anechoic chamber with the help of network analyser for observing radiation pattern and with spectrum analyser to observe the frequencies generated by the VCO.

The fabricated antennas were tested to observe S_{11}, that simply shows the amount of power being reflected from the antenna and is therefore known as reflection coefficient. Similarly, the power transferred from transmitting antenna to receiving antenna is represented by S_{12}. These two parameters are shown in Figure 40 and that clearly demonstrates that the antenna is performing as expected. The -10dB bandwidth of the antenna is ranging from 564 MHz until 1272 MHz, which is the most radiating frequency band of the antenna. Moreover, the antenna is radiating from 520 MHz until 1952 MHz with slight defect at 1630 MHz.

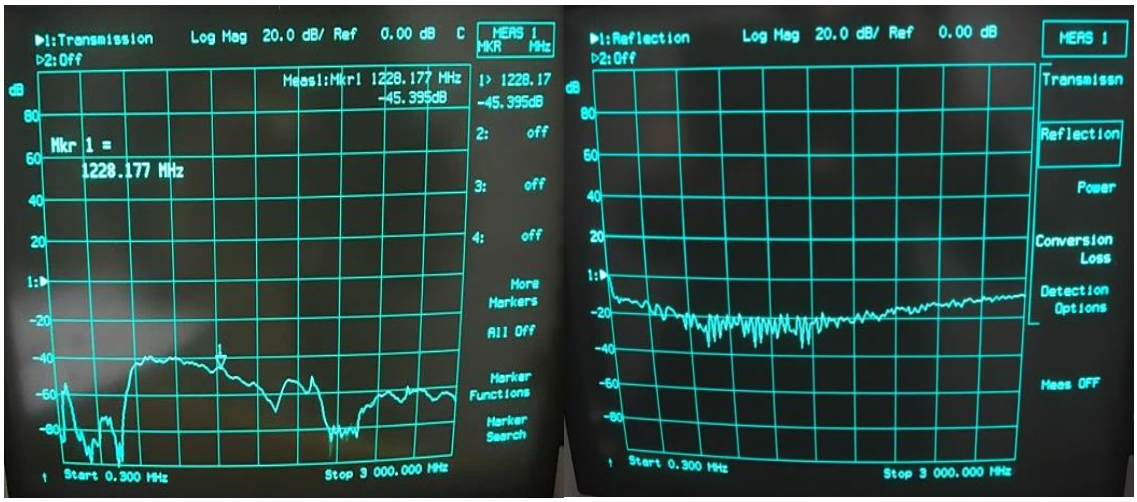

Figure 40. S_{12} (left) and S_{11} (right) parameters of the antenna.

The further test was conducted in the anechoic chamber to study radiation pattern of the antenna. The chamber with the setup for antennas is shown in Figure 41, where transmitting antenna was fixed in a rotating machine to observe radiation pattern at different rotation angles but initially at zero angle, whereas the receiving antenna was fixed at one place at zero angle. The pattern is observed for horizontal, cross and vertical polarizations.

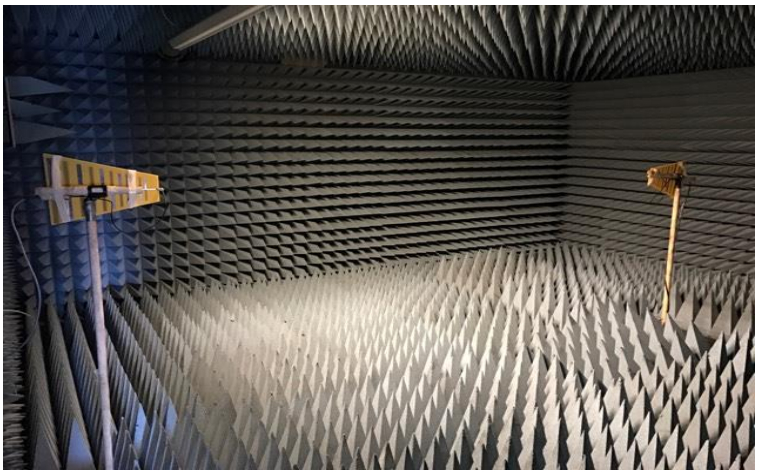

Figure 41. Antennas testing in an anechoic chamber.

From Figure 42, antenna pattern for vertical and horizontal polarization can be seen that are achieved at 900 MHz. The vertical orientation clearly shows that the antenna is acting like an omnidirectional dipole antenna and radiating well in the horizon at zero and 180 degrees and poorly at 90 and 270 degrees. The horizontal pattern shows that the antenna is radiating more in one direction making it directional antenna in that orientation.

The numbers around the circle such as 1, 2, 3 and so on represent the 5-degree rotation angle. The test is performed starting from 0 degree until 360 degree with the increase of 5 degree and back to 0 degree. The pattern is obtained from the average of both directions and the values obtained from the test are attached in the appendix 1.

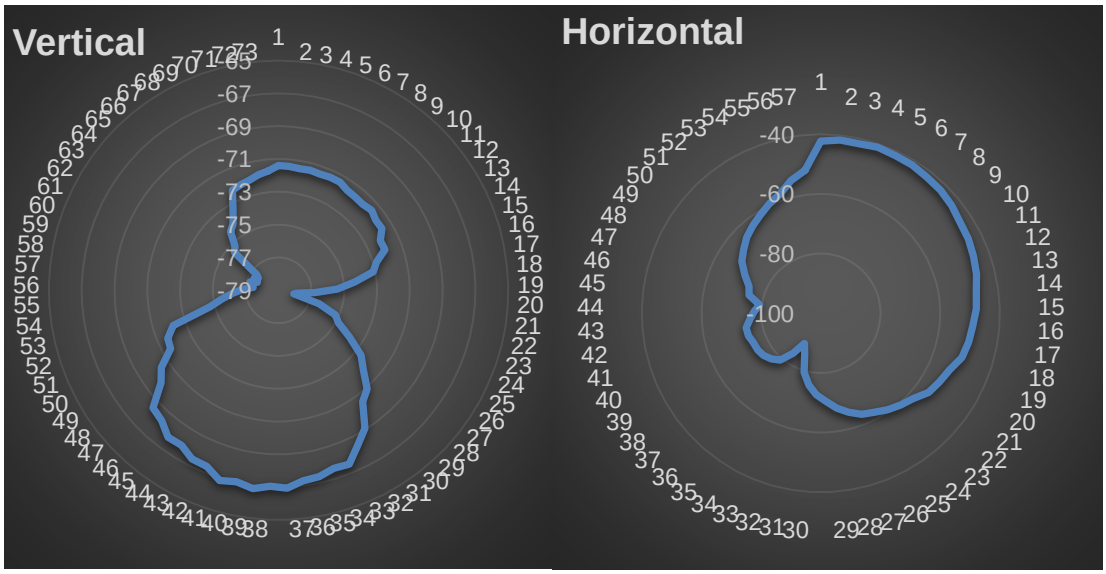

Figure 42. Vertical (left) and horizontal (right) polarization of the antenna.

The cross polarization is maintained with receiver antenna being horizontal orientation and transmitting antenna being vertical orientation. It also shows that the pattern is directional and is radiating more towards zero degree.

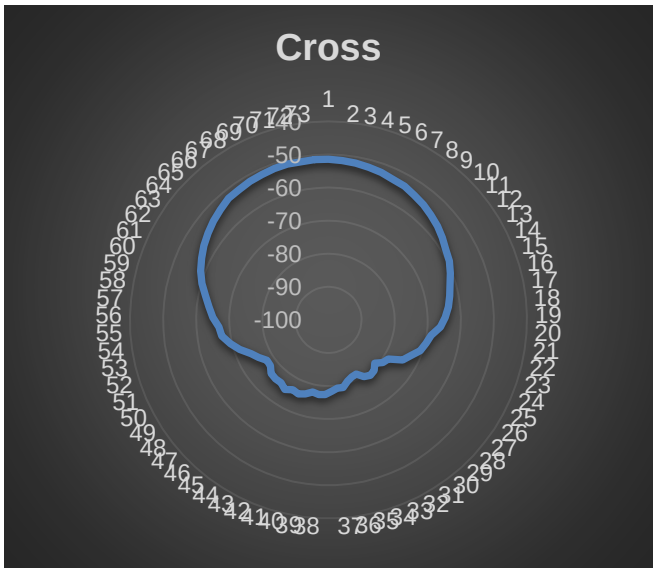

Figure 43. Cross polarization of the antenna.

Finally, after the designed antenna performed as per expectation, the final test was conducted where instead of sending signal from network analyser, it was done with the help of VCO that was purchased from mini-circuits. The VCO was first tested with spectrum analyser to see if it verifies with specifications as mentioned in the datasheet and it did. As mentioned earlier in the theoretical part, a RF amplifier was used in between the VCO and the transmitting antenna to avoid frequency or load pulling. Then the radiated signal was received via the receiving antenna and the frequency spectrum was studied using spectrum analyser.

The analyser was showing quite the similar frequency mentioned in the VCO datasheet upon tuning the voltage from 0 V to 20 V. It can be seen from Figure 44 where the frequency spectra of 348 MHz and 1326 MHZ are obtained respectively at the tuning voltage of 0 V and 20 V. Second harmonic can also be seen in the first picture which has greater amplitude than that of supplied by the VCO. The other tuning range with various frequencies is shown in Figure 45 that clearly proves that the antenna is performing as expected and corresponds the datasheet. The measured values can be checked from the appendix 2.

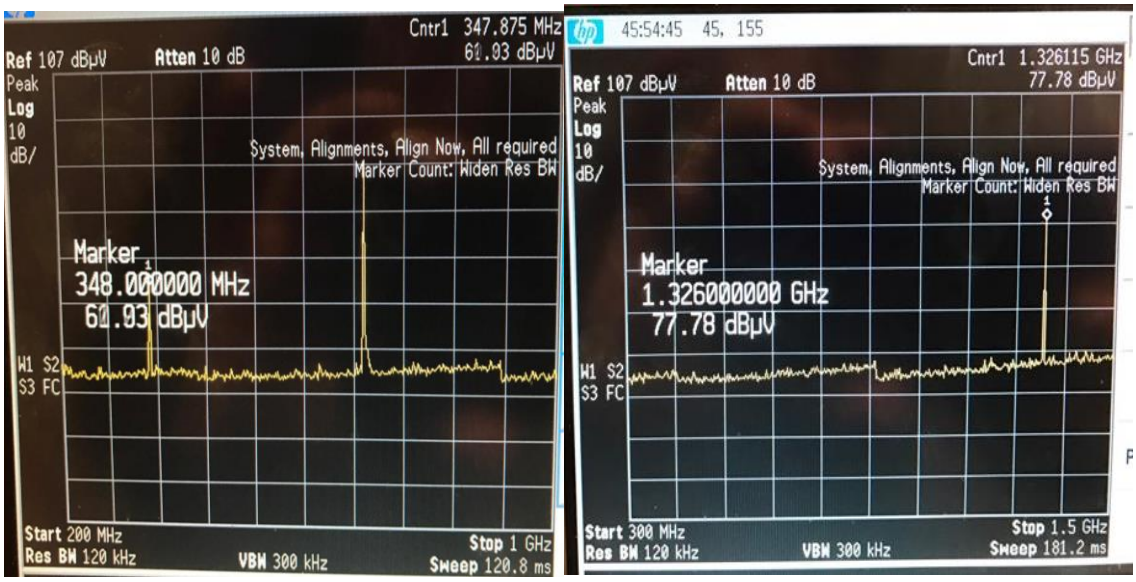

Figure 44. Spectrum analyser showing corresponding frequencies at 0 V and 20 V.

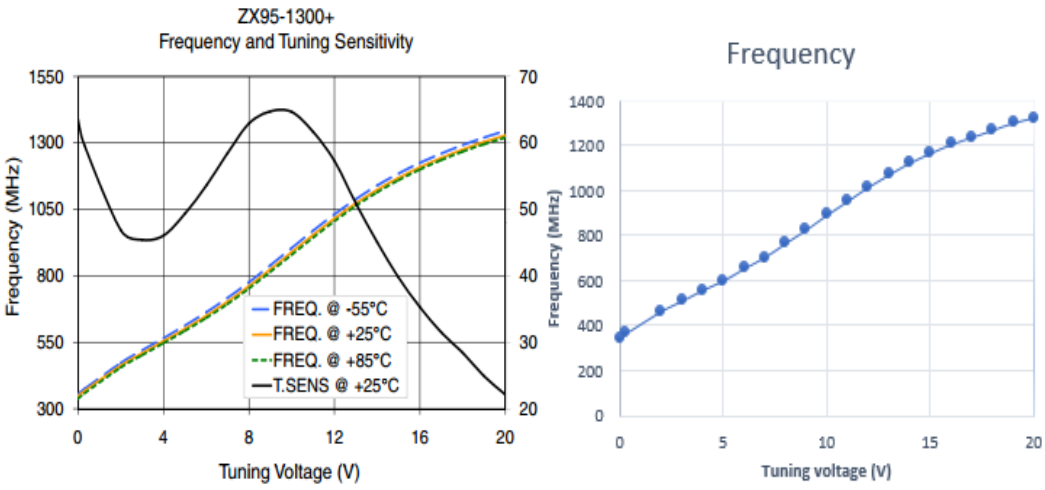

Figure 45. Tuning voltage vs Frequency chart: datasheet (left) and measured (right).

11 Conclusion

The beginning part of the report presented a good overview of oscillator fundamentals followed by the common procedure for the actual design of the negative resistance microwave transistor oscillator on AWR microwave office. The oscillator was designed at single frequency and it could give a sinusoidal voltage waveform as desired. In the same manner, the later part of the report could shed a light on antenna basics leading to the understanding of microstrip path antenna. Finally, the microstrip LPDA antenna was designed and simulated on CST design studio and then later fabricated on FR4 PCB. Few important tests were performed in an anechoic chamber to find out if the antenna performed as expected or not.

Based on the measurement results, it can be concluded that the goal of the project was successfully met, which was to design a reference radiator for EMC measurements. The VCO together with RF buffer and transmitting and receiving antennas, acted as a reference radiator. On tuning supply voltages from 0-20 V, the antenna could radiate the corresponding frequencies as mentioned in the VCO datasheet and the frequency spectra could be easily obtained in the spectrum analyser. The radiation pattern derived with the use of network analyser for different linear orientations also supported the dipole characteristic of the microstrip LPDA antenna. The simulated and measured results supported each other to most extent as well.

The antenna radiation is effective at the frequency range of 565-1272 MHz as this covers the -10dB bandwidth. Although the radiation pattern in this project was taken at single frequency of 900 MHz, the further tests can be performed at other frequencies to cover the feasible wide frequency range. The antennas can also be performed for the frequency range of 520-1952 MHz. Moreover, In the future, these antennas can be used for educational purpose by the students who are planning to take part in professional EMC course held at Electronics department of Helsinki Metropolia University of Applied Sciences.

References

[1] T. L. Floyd, Electronic Devices: Conventional Current Version, New Jersey: Pearson Education Inc., Prentice Hall, 2012.

[2] C. Poole and I. Darwazeh, Microwave Active Circuit Analysis and Design, London Wall, United Kingdom: Elsevier Ltd., 2016.

[3] Electronics Tutorials, “LC Oscillator Basics,” AspenCore, 2017. [Online]. Available: http://www.electronics-tutorials.ws/oscillator/oscillators.html. [Accessed 15 02 2017].

[4] D. M. Pozar, Microwave Engineering, New Jersey, USA: John Wiley & Sons, 2005.

[5] Circuits Todat, “Colpitts Oscillator,” 2015. [Online]. Available: http://www.circuitstoday.com/colpitts-oscillator. [Accessed 13 04 2017].

[6] Mini-Circuits, “Uderstanding VCO Concepts,” 2015. [Online]. Available: https://www.minicircuits.com/app/AN95-007.pdf. [Accessed 26 03 2017].

[7] J. McNeill, “VCO Fundamentals,” Mini-Circuits, [Online]. Available: http://www.clarke.com.au/pdf/Minicircuits_VCO_fundamentals.pdf. [Accessed 04 04 2017].

[8] Circuits Today, “Voltage Controlled Oscillator,” 2015, [Online]. Available: http://www.circuitstoday.com/voltage-controlled-oscillator. [Accessed 08 04 2017].

[9] T. Agarwal, “Voltage Controlled Oscillator- Usage of VCO, Working and Application,” ELPROCUS, 2015. [Online]. Available: https://www.elprocus.com/voltage-controlled-oscillator-working-application. [Accessed 04 08 2017].

[10] J. Stiles, “Pushing and Pulling,” The University of Kangas, 2005. [Online]. Available: http://www.ittc.ku.edu/~jstiles/622/handouts/Pushing%20and%20Pulling.pdf. [Accessed 09 04 2017].

[11] Infineon, “Low Noise Silicon iplar RF Transistor: BFR360F,” Infineon Technologies, 16 11 2009. [Online]. Available: http://www.infineon.com/dgdl/Infineon-BFR360F-DS-v01_01-en.pdf?fileId=db3a30431400ef68011426bc17c4067f. [Accessed 16 04 2017].

[12] I. Rosu, “Bias CIrcuits for RF Devices,” [Online]. Available: http://www.qsl.net/va3iul/Bias/Bias_Circuits_for_RF_Devices.pdf. [Accessed 15 04 2017].

[13] W. L. Stutzman and G. A. Thiele, Antenna Theory and Design- Second Edition, New York: John Wiley & Sons, Inc., 1998.

[14] Antenna Theory, “Radiation Pattern,” 2009-2015. [Online]. Available: http://www.antenna-theory.com/basics/radpattern.php. [Accessed 24 02 2017].

[15] C. A. Balanis, Antenna Theory- Analysis And Design, New Jersey: John Wiley & Sons, Inc., 2016.

[16] S. R. Saunders and A. Aragon-Zavala, Antennas and Propagation for Wireless Communication Systems: Second Edition, England: John Wiley & Sons, Ltd., 2007.

[17] R. L. Carel, “Analysis and Design of the Log-Periodic Antenna Ph.D. Dissertation,” University of Illinois, Urbana, Illinois, 1961.

[18] L. Frenzel, “What's The Difference between A Dipole And A Ground Plane Antenna?,” Electronic Device, 2017. [Online]. Available: http://www.electronicdesign.com/wireless/what-s-difference-between-dipole-and-ground-plane-antenna. [Accessed 24 02 2017].

[19] R. W. Rhea, Oscillator Design and Computer Simulation, Norcross, USA: Noble Publising Corporation, 1995.

[20] P. J. Vis, “RFC- Radio Frequency Choke,” [Online]. Available: http://www.petervis.com/Radios/making-a-crystal-radio/rfc-choke.html. [Accessed 15 04 2017].

Data Collected for Radiation Pattern

Angle (Degrees)	Horizontal Polarization (dB)	Vertical polarization (dB)	Cross-polarization (dB)
0	-42.315	-71.395	-51.45
5	-41.585	-71.415	-51.62
10	-41.81	-71.47	-51.91
15	-41.16	-71.435	-52.295
20	-41.565	-71.47	-52.66
25	-41.615	-71.415	-53.32
30	-42.17	-71.41	-53.505
35	-42.42	-71.61	-54.25
40	-43.24	-71.645	-54.87
45	-44.24	-71.67	-55.695
50	-44.595	-71.52	-56.525
55	-45.33	-71.695	-57.55
60	-46.165	-71.67	-58.64
65	-47.405	-72.1	-59.38
70	-47.84	-72.055	-60.545
75	-48.895	-72.79	-61.78
80	-49.505	-73.125	-62.665
85	-50.415	-74.34	-63.575
90	-52.835	-75.42	-64.7
95	-54.015	-76.78	-66.075
100	-55.17	-77.875	-68.595
105	-57.87	-78.045	-69.66
110	-59.245	-76.395	-70.745
115	-60.66	-75.22	-72.855
120	-62.3	-74.845	-74.57
125	-63.47	-73.82	-78.37
130	-65.495	-72.605	-79.13
135	-67.72	-71.92	-80.82
140	-70.56	-70.915	-79.38
145	-72.72	-70.485	-79.02

150	-75.62	-69.075	-79.755
155	-79.485	-68.4	-81.565
160	-85.545	-67.565	-81.355
165	-88.53	-67.63	-80.655
170	-83.645	-67.37	-79.095
175	-79.245	-67.295	-79.165
180	-77.395	-66.93	-78.35
185	-76.18	-67.045	-77.4
190	-75.53	-66.81	-77.27
195	-75.355	-67.045	-77.65
200	-74.575	-66.87	-76.6
205	-74.525	-67.41	-75.82
210	-76.215	-67.44	-76.31
215	-77.6	-67.845	-75.15
220	-79.24	-67.795	-76.19
225	-75.19	-68.33	-76.085
230	-74.32	-68.515	-76.28
235	-71.46	-69.875	-77.65
240	-68.365	-70.445	-77.7
245	-66.45	-71.525	-76.025
250	-64.41	-71.635	-74.42
255	-62.85	-72.22	-71.71
260	-61.32	-74.68	-69.53
265	-59.415	-75.545	-67.375
270	-57.78	-76.195	-66.83
275	-54.44	-76.82	-65.055
280	-51.79	-77.445	-63.7
285	-51.16	-77.345	-62.13
290	-51.82	-77.195	-60.175
295	-50.655	-77.62	-58.625
300	-49.39	-77.33	-57.385
305	-48.305	-77.57	-56.18
310	-47.53	-77.37	-55.09
315	-46.86	-75.47	-54.135

320	-46.555	-75.21	-53.305
325	-45.89	-74.38	-52.4
330	-45.63	-74.095	-52.285
335	-45.46	-73.395	-51.875
340	-45.23	-72.285	-51.695
345	-45.165	-72.17	-51.395
350	-45.26	-72.06	-51.275
355	-45.41	-71.845	-51.485
360	-45.37	-71.69	-51.37

Tuning Voltage Vs Frequency of VCO

Tuning voltage (V)	Frequency (MHz)
0	348
0.3	368
2	466
3	512
4	560
5	602
6	656
7	706
8	768
9	828
10	894
11	955.24
12	1018
13	1073
14	1125
15	1168
16	1208
17	1239
18	1271
19	1303
20	1326