Kristian Lilius

Battery Cabinet Cost Structure and Optimization

Helsinki Metropolia University of Applied Sciences

Bachelor of Engineering

Mechanical Engineering

Thesis

4 December 2017

Metropolia

Author(s) Title Number of Pages Date	Kristian Lilius Battery Cabinet Cost Structure and Optimization 54 pages 4 December 2017
Degree	Bachelor of Engineering
Degree Programme	Mechanical Engineering
Specialization option	Machine Design
Instructor(s)	Pekka Salonen, Senior Lecturer Jari Eloranta, Project Manager

The objective of this Bachelor's thesis was to gather and analyze data about the cost structures of Eaton's EBC-D and EBC-E battery cabinets. The data was used to design a concept for a cost-effective battery cabinet that would replace the two current cabinets. This thesis was commissioned by Eaton Power Quality.

The data was gathered by investigating costed BOM's sent by the subcontractor that manufactures the battery cabinets. Employees involved in the design process of battery cabinets were interviewed in order to establish cost estimates for various features and design solutions. The concept for the combined battery cabinet was designed using Creo CAD software.

As a result, it was discovered that the current battery cabinet designs have multiple features that could be removed in order to reduce the cost of the design. Various design solutions could also be made to reduce the overall cost of the product. Some of the information discovered can also be used to reduce the cost of other battery cabinets.

Keywords	Cost effective design, battery cabinet

Metropolia

Contents

List of Abbreviations

UPS	Uninterruptible Power Supply
DFA	Design for Assembly
DFMA	Design for Manufacture and Assembly
IP	Ingress Protection
MCCB	Molded Case Circuit Breaker
EBC	External Battery Cabinet
BOM	Bill of Materials
ECD	Environmentally Conscious Design
ECO	Engineering Change Order
R&D	Research and development

1 Introduction

This Bachelor's thesis was made for Eaton Power Quality, which is a subsidiary of Eaton Corporation. Eaton Power Quality's factory in Finland is situated in Koskelo in Espoo. They manufacture and develop UPS devices and battery cabinets.

The objective of this thesis was to gather and examine data about the cost structures of two of Eaton's battery cabinets, the EBC-D and EBC-E. These two battery cabinets were selected because they are very similiar in terms of their applications. The battery cabinets are manufactured by a subcontractor, and therefore all of the data about how the costs are divided between different aspects of the battery cabinets was not available before the start of this thesis. The data gathered was used to design a cost-effective concept for a battery cabinet that could replace the two current cabinets.

The main method for gathering data about the cost structures was to interview the subcontractor and people involved in the design process of a battery cabinet, e.g. mechanical engineers. Standards affecting battery cabinets were studied in order to determine which design features are mandatory. Product marketing was also interviewed about their requirements concerning design features and solutions.

Chapter 2 describes how UPS devices and battery cabinets work and what their applications can be. Chapter 3 deals with the DFMA method which was used when analyzing the current battery cabinets and during the design of the combined battery cabinet. Chapter 4 examines the standards which affect the design of a battery cabinet. Chapter 5 compares some battery cabinets from other manufacturers, which are similiar to the EBC-D and EBC-E cabinets. Chapter 6 describes the designs of the current battery cabinets and compares their cost structures. Chapter 7 deals with the battery cabinet features and design solutions and how they could be improved from a cost standpoint. Chapter 8 describes the design for the combined battery cabinet.

2 UPS Devices and Battery Cabinets

A UPS device is used to protect IT equipment and other electrical devices from problems relating to the delivery of the current. A UPS device can perform three basic func-

tions: it can prevent hardware damage caused by surges and spikes in the incoming current; it can prevent data loss and corruption by supplying short term backup power in the event of a power outage; it can provide backup power for networks and other applications, thus reducing downtime.

UPS devices are not designed to be used during long term power outages. They most commonly store energy in batteries, although flywheels can also be used. The batteries can either be internal batteries in the UPS device itself or they can be placed in an external battery cabinet. UPS devices can, however, be paired with generators, giving them enough time to power up in the event of a power cut.

Power problems that a UPS device can protect against include power failures, power sags or surges, under or overvoltage, electrical line noise, frequency variation, switching transient and harmonic distortion. These problems are usually caused by natural phenomena such as a lightning or other equipment connected to the grid. (1, p. 9.)

2.1 UPS Topologies

There are three common UPS topologies which provide varying degrees of protection. These three topologies are all suited for slightly different uses.

Passive standby topology seen in image 1 is used to protect PCs against power failure, power sag and power surge. In normal operation the UPS supplies power to the PC directly from the mains. The batteries are also charged from the mains. During power cuts or fluctuation, the UPS delivers power from its batteries. This topology is suitable for office environments where the power supply is generally reliable and of good quality.

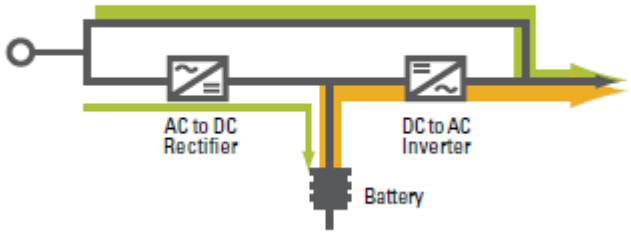

Image 1. Passive standby topology (off-line) (1, p. 10)

Line interactive topology seen in image 2 is used to protect enterprise networks and IT applications against a power failure, power sag, power surge and under and overvoltage. In normal operation, the UPS monitors the quality of the power supply and reacts to fluctuations. The UPS has a voltage compensation circuit which can boost or reduce the supply voltage in order to compensate for fluctuations. In the event of a power cut, the batteries will supply power to the device, like with passive standby topology.

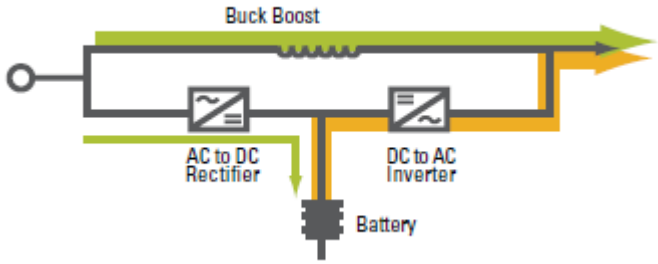

Image 2. Line interactive topology (1, p. 10)

Double-conversion topology seen in image 3 is the basis for a UPS designed for continuous power protection of critical equipment against all the power problems listed on page 1. The output voltage is entirely regenerated by first running the current through an AC to DC rectifier and then through a DC to AC inverter. There is no transient when changing over to battery power, so double-conversion UPSs can be used with any type of equipment.

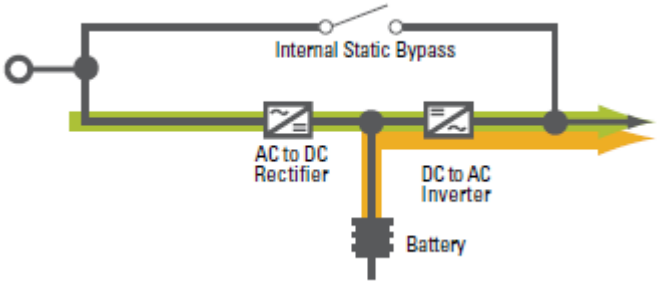

Image 3. Double-conversion topology (on-line) (1, p. 10)

The type of topology chosen depends on the equipment the UPS device is intended to protect and the environment it will be used in. (1, p. 10.)

2.2 Battery Cabinets

External battery cabinets provide short-term backup power to the UPS, if the UPS does not contain internal batteries or extended run times are needed. The battery cabinet usually contains the required number of batteries and a circuit breaker which can disconnect the battery cabinet from the UPS in case of overload or short circuit. The batteries in the battery cabinet are connected in series. One series of batteries is known as a string. The number of batteries per string depends on the required voltage, which is usually determined by the UPS that the battery cabinet will be connected to.

Battery strings can be connected in parallel, either within a single battery cabinet or multiple battery cabinets can be connected parallel with each other. This is generally done to increase the backup time for a particular load. If the UPS has internal batteries, an external battery cabinet can also be connected in parallel with the internal battery string. Backup times can also be adjusted by installing batteries with different capacity, usually measured in ampere hours or Ah.

Battery cabinets are often used with UPS devices that can have greatly differing power ratings. Because the voltage required by the UPS is usually set at quite a narrow range, e.g. 384 V to 480 V, the output current from the battery cabinet must be increased in order to achieve the higher power ratings. The voltage of the batteries in Eaton’s battery cabinets is typically 12 V, so the length of the battery strings can vary from 32 to 40 batteries. To enable this increase in the output current, battery cabinets

can have several battery breaker options, rated for different currents. The cabling can also differ depending on the output current, i.e. higher currents require thicker cables.

Battery cabinets, like UPS devices, can also be sold with different Ingress Protection ratings. The IP rating classifies the degree of protection that is provided against the intrusion of solids and water into the mechanical casings and electrical enclosures. The rating consists of two digits, which indicate the level of protection against solid objects and water respectively. Battery cabinets are typically rated IP21. The first digit means that protection against access to hazardous parts and entry of foreign solid objects is provided for objects under 12.5 mm in diameter e.g. fingers. The second digit means that protection against harmful ingress of water is provided for vertically falling drops of water. (12)

The batteries in a battery cabinet are usually intended to be replaced during the lifetime of the cabinet. The average service life of the batteries used in battery cabinets is approximately five years, whereas the lifespan of the battery cabinet itself is approximately 15 years, so the batteries are replaced on average two or three times during the lifespan of the battery cabinet.

3 Cost Effective Design

The most common method used in industry in order to create cost effective designs is DFMA. DFMA requires a cross-functional team of various experts from different departments. In addition to the product designers these can include e.g. manufacturing engineers, quality engineers, buyers and production personnel. DFMA is most effective when it is used from the beginning of the design process. The further along the development process the product is, the more difficult it is to make changes to the design, since these changes will likely affect other aspects of the product as well. (3, p. 255.)

The DFMA method consists of five steps which are shown in image 4. The first step is to estimate the manufacturing costs. The second step is to reduce the cost of individual components. The third step is to reduce the cost of supporting production. The final step is to consider the impact DFMA decisions will have on other factors of the product. After this the cost of the new design can be estimated.

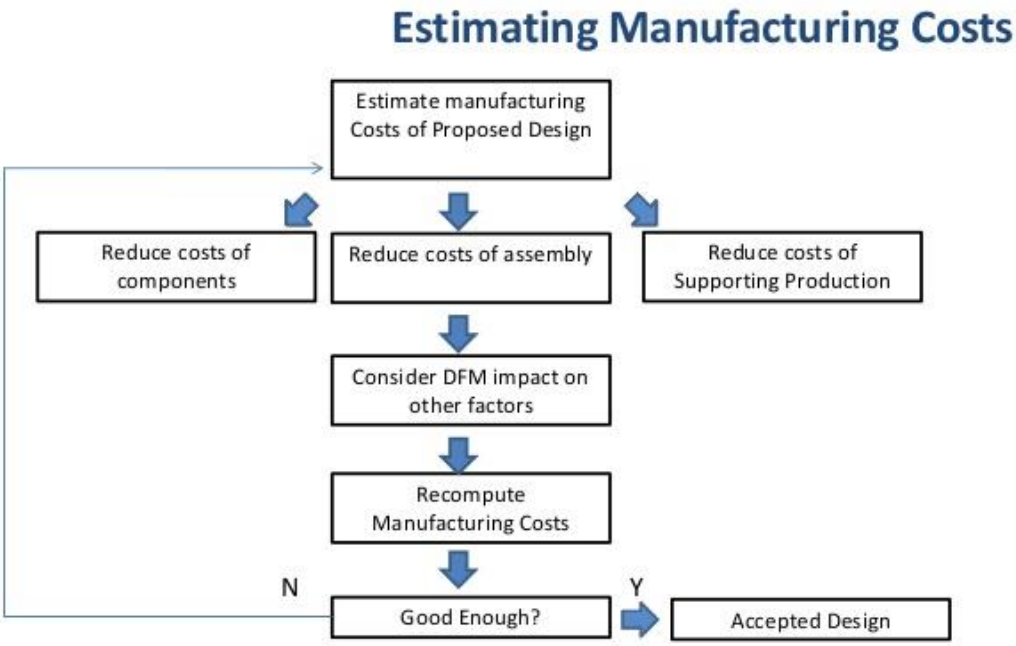

Image 4. DFMA method (2)

3.1 Estimating Manufacturing Costs

Manufacturing costs can be divided into three categories: component costs, assembly costs and overhead costs. Component costs include both standard and custom parts. Standard parts used in battery cabinets include e.g. circuit breakers, batteries and screws. Custom parts in battery cabinets include e.g. sheet metal parts and cables. The cost of custom parts can be further divided into the cost of the raw material, processing costs and tooling costs. Assembly costs include the cost of labor, as well as the equipment and tooling needed for assembly. Overhead costs include all other costs associated with the manufacturing of a product. These include support costs, e.g. quality assurance, equipment maintenance and materials handling, as well as indirect costs which include costs that cannot be linked to a particular product, e.g. the cost of maintenance of the building. (2, p. 258-259.)

A BOM is a useful tool in keeping the part cost information organized. It shows all the parts included in the product and columns can be added to show how the price of a

part is divided between the cost of raw materials and processing costs as well as the prices for standard components. This also offers a good way to keep track of possible saving. If a part is simplified so that it requires less processing or parts are eliminated completely, the new estimated cost of the product can be easily calculated. (2, p. 260.)

The cost of standard components is usually simple to estimate. The cost of small components, e.g. screws, bolts and rivets, is often accurately known since these are usually used in other products that are already in production. If a particular component is not in use its cost can be estimated by comparing it to similar components that are in use. The cost of larger components, such as battery breakers or batteries, can be obtained by soliciting price quotes from vendors. When obtaining price quotes it is important to know the estimated production quantities of the product it will be used in, since this will have a major impact on the unit cost of a part. (2, p. 261.)

Estimating the cost of custom components in battery cabinets is more difficult than with the standard components. The cost of the raw material is usually easy to estimate since the thickness of the sheet metal parts is known, as well as the size of the parts. When calculating the processing costs of a part, usually only a rough estimate can be achieved if the parts are manufactured by a subcontractor. This estimate is based on previous experience with similar tooling methods and the average cost of a single hole or flange. (2, p. 261-262.)

When estimating the cost of assembly, an estimated assembly time for the product has to be calculated and then multiplied by a labour rate. When estimating assembly time, numerous classification systems and time standards exist, an example of which is in image 5, which give average assembly times based on such things as size, symmetry and weight of the part. When using the classification systems, care has to be taken so that the resulting assembly time estimation is valid, since the classification limits in these systems are rigid. If many parts are close to the limit of a particular classification, then this can result in a false assembly time estimation. (4, p. 82-83.)

MANUAL HANDLING-ESTIMATED TIMES (s)

Key: One hand

			Parts are easy to grasp and manipulate					Parts present handling difficulties (1)				
			Thickness >2 mm			Thickness ≤2 mm		Thickness >2 mm			Thickness ≤2 mm	
			Size >15 mm	6 mm ≤ size >15 mm	Size <6 mm	Size >6 mm	Size ≤6 mm	Size >15 mm	6 mm ≤ size ≤15 mm	Size <6 mm	Size >6 mm	Size ≤6 mm
			0	1	2	3	4	5	6	7	8	9
Parts can be grasped and manipulated by one hand without the aid of grasping tools	(α+β) < 360°	0	1.13	1.43	1.88	1.69	2.18	1.84	2.17	2.65	2.45	2.98
	360° ≤ (α+β) < 540°	1	1.5	1.8	2.25	2.06	2.55	2.25	2.57	3.06	3	3.38
	540° ≤ (α+β) < 720°	2	1.8	2.1	2.55	2.36	2.85	2.57	2.9	3.38	3.18	3.7
	(α+β) = 720°	3	1.95	2.25	2.7	2.51	3	2.73	3.06	3.55	3.34	4

One hand with grasping aids

				Parts need tweezers for grasping and manipulation									
				Parts can be manipulated without optical magnification				Parts require optical magnification for manipulation				Parts need standard tools other than tweezers	Parts need special tools for grasping and manipulation
				Parts are easy to grasp and manipulate		Parts present handling difficulties (1)		Parts are easy to grasp and manipulate		Parts present handling difficulties (1)			
				Thickness >0.25 mm	Thickness ≤0.25 mm	Thickness >0.25 mm	Thickness ≤0.25 mm	Thickness >0.25 mm	Thickness ≤0.25 mm	Thickness >0.25 mm	Thickness ≤0.25 mm		
				0	1	2	3	4	5	6	7	8	9
Parts can be grasped and manipulated by one hand but only with the use of grasping tools	α ≤ 180°	0 ≤ β ≤ 180°	4	3.6	6.85	4.35	7.6	5.6	8.35	6.35	8.6	7	7
		β = 360°	5	4	7.25	4.75	8	6	8.75	6.75	9	8	8
	α = 360°	α ≤ β ≤ 180°	6	4.8	8.05	5.55	8.8	6.8	9.55	7.55	9.8	8	9
		β = 360°	7	5.1	8.35	5.85	9.1	7.1	9.55	7.85	10.1	9	10

Two hands for manipulation

		Parts present no additional handling difficulties					Parts present additional handling difficulties (e.g. sticky, delicate, slippery, etc.) (1)				
		α ≤ 180°			α = 360°		α ≤ 180°			α = 360°	
		Size >15 mm	6 mm ≤ size ≤15 mm	Size <6 mm	Size >6 mm	Size ≤6 mm	Size >15 mm	6 mm ≤ size ≤15 mm	Size <6 mm	Size >6 mm	Size ≤6 mm
		0	1	2	3	4	5	6	7	8	9
Parts severely nest or tangle or are flexible but can be grasped and lifted by one hand (with the use of grasping tools if necessary) (2)	8	4.1	4.5	5.1	5.6	6.75	5	5.25	5.85	6.35	7

Two hands or assistance required for large size

		Parts can be handled by one person without mechanical assistance									
		Parts do not severely nest or tangle and are not flexible								Parts severely nest or tangle or are flexible (2)	Two persons or mechanical assistance required for parts manipulation
		Part weight < 10 lb				Parts are heavy (>10 lb)					
		Parts are easy to grasp and manipulate		Parts present other handling difficulties (1)		Parts are easy to grasp and manipulate		Parts present other handling difficulties (1)			
		α ≤ 180°	α = 360°	α ≤ 180°	α = 360°	α ≤ 180°	α = 360°	α ≤ 180°	α = 360°		
		0	1	2	3	4	5	6	7	8	9
Two hands, two persons or mechanical assistance required for grasping and transporting parts	9	2	3	2	3	3	4	4	5	7	9

Image 5. Manual assembly times (4, p. 83)

3.2 Cost Reduction of Components

When reducing the cost of parts in a product, it is important to understand the manufacturing process behind them. When the parts are manufactured and the products as-

sembled by a subcontractor, it is important to work closely with them, because they have the expertise on the constraints and the cost drivers of the production process. (3, p. 264-265.)

Reducing processing steps in parts generally reduces the costs of the parts as well. The need for painting is one processing step that should always be considered (3, p. 265). When using turret presses to punch the holes in sheet metal parts, it is important to use standard tools whenever possible. If standard tools are not used e.g. in curved edges, the edge has to be created by a series of closely spaced hits in a process called nibbling. With a standard radius tool the curve could have been produced with one hit. The resulting curve is also not as smooth as the standard tool would have produced. (4, p. 409)

Some general design rules for sheet metal parts can be given, so the manufacturing of the parts can be done more easily. The spacing of the punched features from each other as well as the edges of the parts should be at least twice the material thickness in order to avoid the distortion of the narrow section of material. The same rule of thumb can be used when dimensioning holes in relation to bends. If bend lines are in the corners of the sheet metal profile, relief cuts should be added in order to avoid tearing the material during bending. When extruded holes are punched into the material, the height of the extrusion is usually two to three times the thickness of the material. If the extrusion is required to be higher than this, then a self-clinching nut may have to be used. (4, p. 413-417.)

An important factor in reducing the cost of parts is to increase the quantity of each produced part. This can be achieved by e.g. using the same parts in multiple products, which will increase the production numbers for these parts. Using as many standardized parts as possible is also recommended e.g. using a standard profile beam in the frame of a battery cabinet. The use of parts in multiple products and the use of standardized parts will also reduce the amount of time needed to design a new product, since the number of new custom parts is reduced. This reduction in development time will also help reduce the cost of the product. (3, p. 265-266.)

3.3 Cost Reduction of the Assembly

One method of estimating how much an assembly's cost can be reduced is to use the DFA index. This index is intended to compare the theoretical minimum assembly time to the estimated total assembly time. The formula for calculating the DFA index is:

$$DFA\ index = \frac{(Theoretical\ minimum\ number\ of\ parts) * (3\ seconds)}{Estimated\ total\ assembly\ time}$$

When determining the theoretical minimum number of parts for an assembly, the following questions should be asked for each part in the assembly:

- Does the part need to move in relation to the rest of the assembly? In battery cabinets e.g. the door would be a part for which the answer would be affirmative.
- Does the part have to be made of different material from the rest of the assembly for fundamental physical reasons? In battery cabinets, standoffs have to be of a different material in order to provide the necessary insulation.
- Does the part need to be separated from the assembly access, replacement or repair? In battery cabinets e.g. sliding battery shelves speed up the process of installing and changing the batteries.

Only if a part satisfies at least one of these conditions, it is counted as a theoretical minimum part. Three seconds is the average time it takes to assemble a small part that is easy to handle and insert into the assembly. The estimated total assembly time can be estimated with a classification system that was presented in image 5, or if the product is already in production, the assembly time can be measured. (3, p. 268.)

If a part does not satisfy any of the conditions mentioned above, then integrating it with other parts should be considered. This can have several positive effects on the product. Firstly, it reduces the number of parts that have to be assembled, which can reduce assembly times. Secondly, one part is often less expensive than two or more separate parts. Thirdly, critical measurements can more easily be controlled since the tolerances of the measurement only apply to one part. Integration of parts should always be considered on a case-by-case basis. In some instances, e.g. with sheet metal parts, the geometry of the integrated part could be so complex that manufacturing it would be either very difficult and expensive, or even impossible. (3, p. 268-269.)

When reducing the cost of the assembly work, maximizing the ease how the product can be assembled is crucial, since this reduces assembly time. Some general rules can be given how to reduce assembly time e.g. when possible, parts should be inserted from the top of the assembly. This means gravity helps keep the part in place and visibility is generally good. Restricted vision can add up to 1.5 seconds to the insertion time of a screw when compared to a screw that has good visibility. Parts should be self-aligning, so that assembling them does not require precise movements. Chamfers are an example of a way to make parts self-aligning. Image 6 shows that a curved chamfer is the best chamfer type in terms of assembly time. However, this type of chamfer is expensive to manufacture, so providing a conical chamfer to both the peg, e.g. a screw, and the hole is preferable. (3, p. 269-270; 4, p. 91-99.)

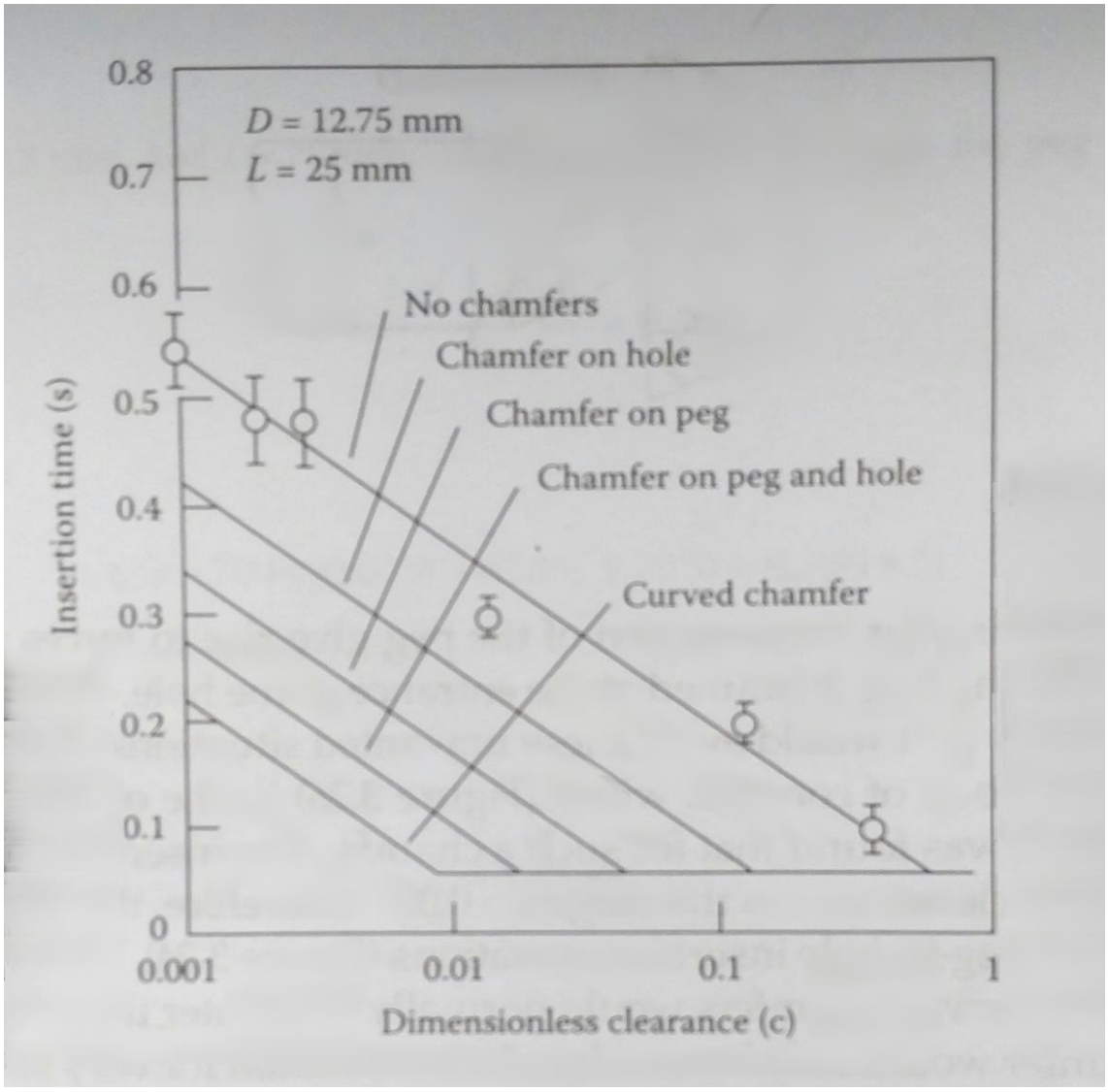

Image 6. Chamfer effects on insertion times (4, p. 93)

Clearance from walls is also a factor in the insertion times for screws, nuts, bolts and rivets. With screws that have good visibility, the clearance from walls should be approximately 14 mm in order to avoid an increase in insertion time because of restricted access. For nuts this clearance should be as much as 50 mm, depending on the type of the wrench used. Image 7 shows the effects that clearance has on the insertion of pop-rivets. With pop-rivets, the clearance to the side of the riveting tool should be at least 30 mm and the clearance from the end of the riveting tool should be a minimum of 10 mm. Restricted access can triple the time required for the riveting operation. (4, p. 98-100.)

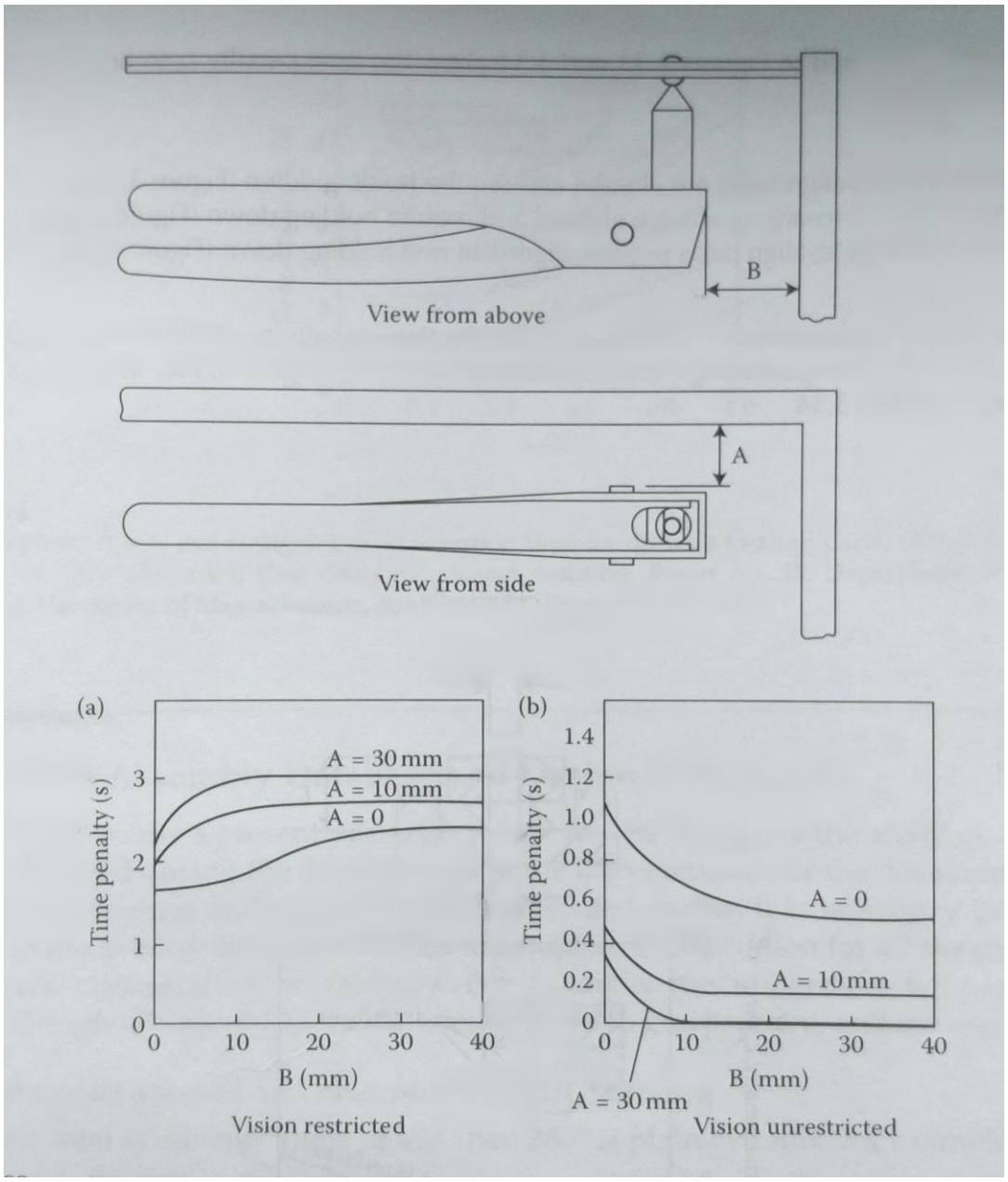

Image 7. Clearance effects of pop-riveting times (4, p. 101)

When screw types are considered, the effect of the screw head type can be seen in image 8. The Allen and the Philips-head screws are faster to install than the slot-head screws, but with power tools, this difference is negligible. (4, p. 99.)

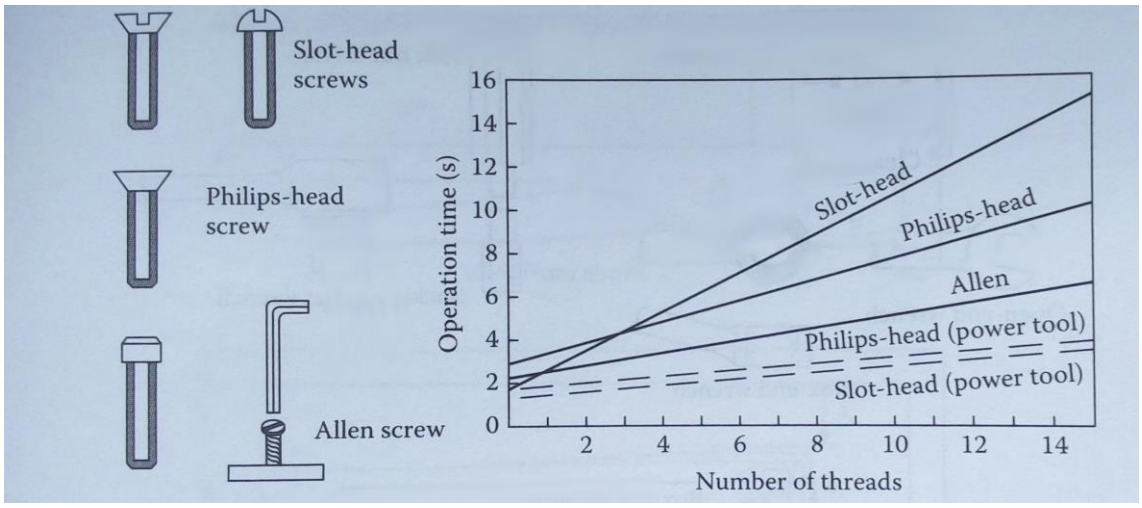

Image 8. Effect of screw head type on insertion times (4, p. 99)

Parts should also require minimal orientation in order to be assembled. By increasing part symmetry, the assembly time can be reduced, since the parts will need less orientation in order to be installed into the assembly. The parts should require only one hand for assembly. This relates mainly to the size and weight of the part. If two hands are required to install a particular part, this can increase the assembly time for that particular part by a factor of 1.5, compared to a part that could be installed with one hand. The use of parts that are so small that they require tweezers in order to be manipulated should also be avoided if possible. (3, p. 270; 4, p. 85-90.)

Parts should be assembled with a single linear motion, preferably without the use of tools, e.g. snap-in tie wraps are faster to assemble than tie wraps that have to be threaded through a lance bridge opening. The cost of different fastening methods, in increasing manual assembly cost order is:

- snap fitting
- plastic bending
- riveting
- screw fastening

Parts that require holding down during installation should be avoided, i.e. parts should be secured after insertion, even if they might still require a screw or rivet to be fastened. (3, p. 270; 4, p. 74-79.)

3.4 Cost Reduction of Supporting Production

Reducing the cost of components and assembly work also reduces the cost of production support, e.g. reducing the number of parts reduces the demand for inventory management. DFMA can also reduce the need for product quality control. This can be achieved through several methods. Firstly, increasing the number of standardized parts, since the quality control for these parts is already done by the supplier. Secondly, either making parts completely symmetrical or exaggerating their differences can not only reduce assembly costs, since the parts require less orientation, but it can also reduce the need for quality control by minimizing the possible errors during assembly. Thirdly, an increase in assembly time also increases the number of defects in the assembly, as shown in image 9. Since DFMA is meant to reduce assembly time, the number of defects should also decrease. (3, p. 270-271; 4, p. 121-123.)

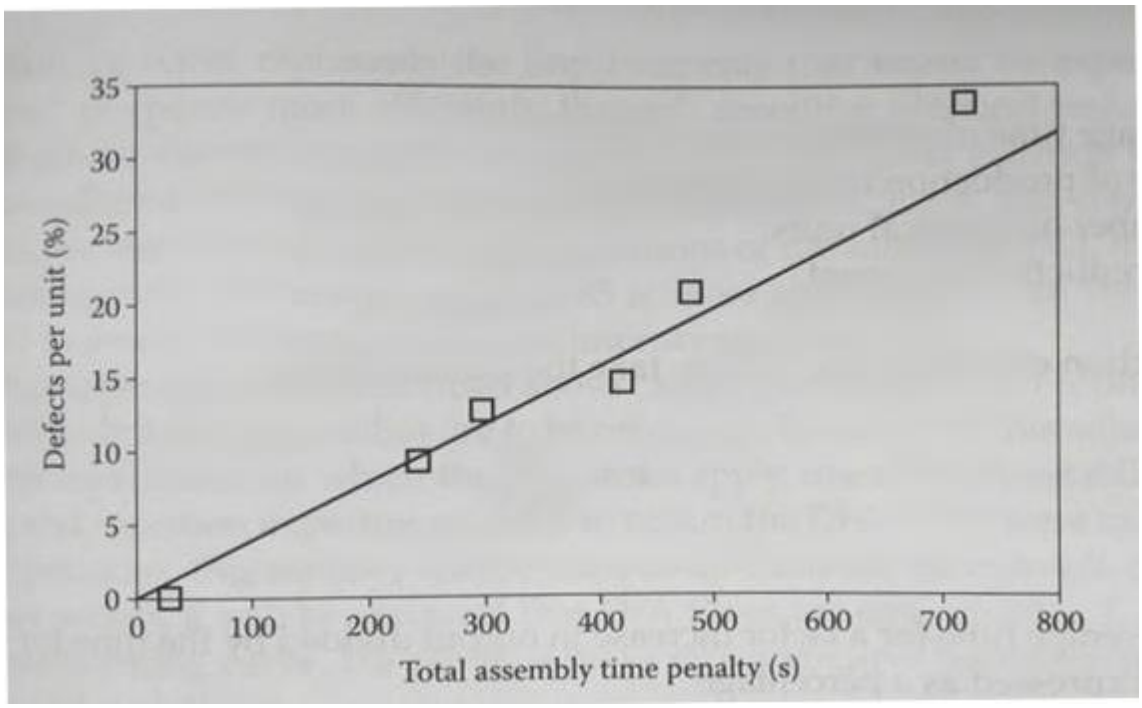

Image 9. Effect of assembly time penalties on defect rate (4, p. 123)

3.5 DFMA Impact on Other Factors

The effects that the DFMA process has on other factors should also be considered during the process. These factors can include development time and cost, product

quality and other external factors. Development time and cost are closely related. While almost all designs have some aspects, which could be improved in order to decrease manufacturing costs, at some point the savings that can be achieved through the DFMA method are no longer worth the extra development time they would cost. Delays in development time can lead to e.g. a competitor launching a similar product before the company in question, which could reduce the sales of the product. While the DFMA method generally improves product quality, as discussed in the previous chapter, this is not always the case. This should be kept in mind during the process. DFMA can also have effects on external factors, e.g. the components developed during the process could be used by another design team within the company. Therefore spending extra time in the development of a part could be worthwhile if it is expected to be used in other product development projects. (3, p. 272-273.)

4 Standard Requirements

The safety standards affecting battery cabinet design are IEC 60950-1 and IEC 62040-1. These standards define various mechanical and electrical safety requirements that the battery cabinet must fulfill. Standard IEC 60950-1 concerns information technology equipment in general and standard IEC 62040-1 concerns UPS devices, but it is still applicable to battery cabinets in some parts. In addition to these the battery cabinets must also comply with environmental standards and directives.

4.1 Electrical Requirements

The requirements concerning the battery trays and the battery compartment as a whole include e.g. requirements for battery spillage, access to the battery compartment and ventilation of the battery compartment. The battery trays must be capable of retaining liquids that could leak as a result of pressure build-up in the battery. The battery trays must also have adequate protection e.g. electrolyte-resistive coating. These requirements do not apply when the type of battery used is such that leakage of the electrolyte is considered unlikely. An example of this is the valve-regulated lead-acid, or VRLA, battery. The batteries used in Eaton’s battery cabinets are typically VRLA batteries. (8, p. 148.)

There must be no access to the battery compartment when the battery cabinet door is closed. This is tested using a test finger and a test pin, which can be seen in images 10 and 11 respectively. The test finger and pin are not allowed to come in contact with any parts that could be hazardous to the operator. (8, p. 56-57.)

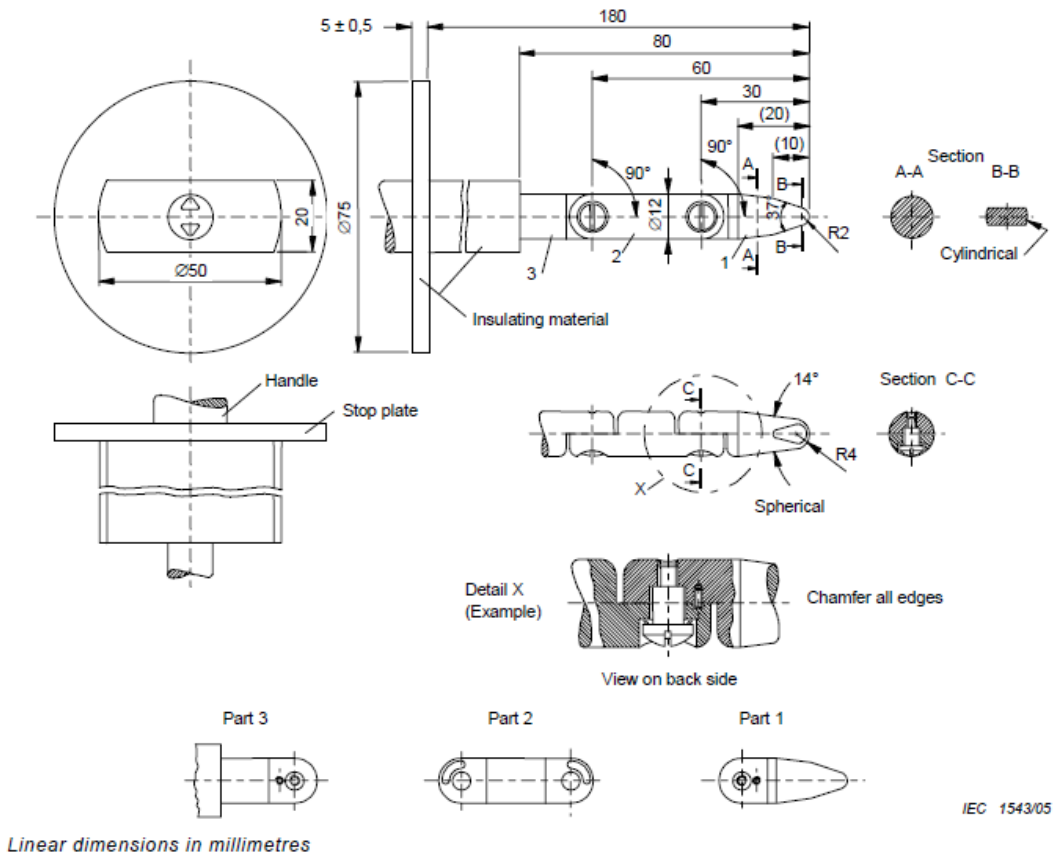

Image 10. Test finger (8, p. 58)

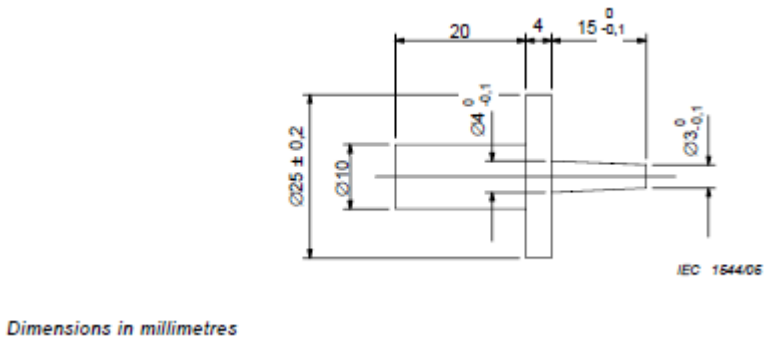

Image 11. Test pin (8, p. 59)

The battery compartment ventilation in lead-acid battery compartments has to be adequate to reduce the risk of build-up pressure or accumulation of a dangerous gas mixture, such as hydrogen-air. Because a hydrogen-air mixture is lighter than air, there are ventilation openings in the top portions of the battery cabinet as well as the bottom. The size of these openings is determined by the following formula (9, p. 57-58.):

$$Q = v * q * s * n * I * C \tag{1}$$

Q is the ventilation air flow
v is the necessary dilution of hydrogen
q is the amount of hydrogen generated per Ah
s is the safety factor
n is the number of battery cells
I is the A/Ah value, which depends on the type of battery used
C is the nominal battery capacity in Ah at the 10 h discharge rate

The mean speed of air flow can be estimated as 0.1 m/s, which is equal to 360 m/h so the necessary free areas of the battery compartment air inlet and outlet openings can be calculated with the formula:

$$A \geq Q/360\ (m^2)$$

Any potentially arc-producing elements, such as open fuse links and the contacts of circuit breakers located in battery compartments with vented batteries have to be mounted at least 100 mm below the lowest battery vent. In some cases this can be the most straightforward way of fulfilling the standard requirements, since the battery breaker will not have to be isolated from the battery compartment. The compartments must also not vent into other closed spaces where arc-producing elements are located, i.e. if the battery breaker is not located within the battery compartment, then the battery compartment must not vent into the location that the battery breaker is located in. (9, p. 27.)

The battery cabinet must have a fire enclosure in order to minimize the spread of fire or flames from within the battery cabinet. There are also limitations to the openings on the sides and top of the battery cabinet in order to reduce the risk of objects contacting bare conductive parts. The fire enclosure must be constructed in a way that the open-

ings on the sides of the battery cabinet do not fall within a 5° angle of any parts that could emit material which could ignite the supporting surface. This is illustrated in image 12. (8, p. 159.)

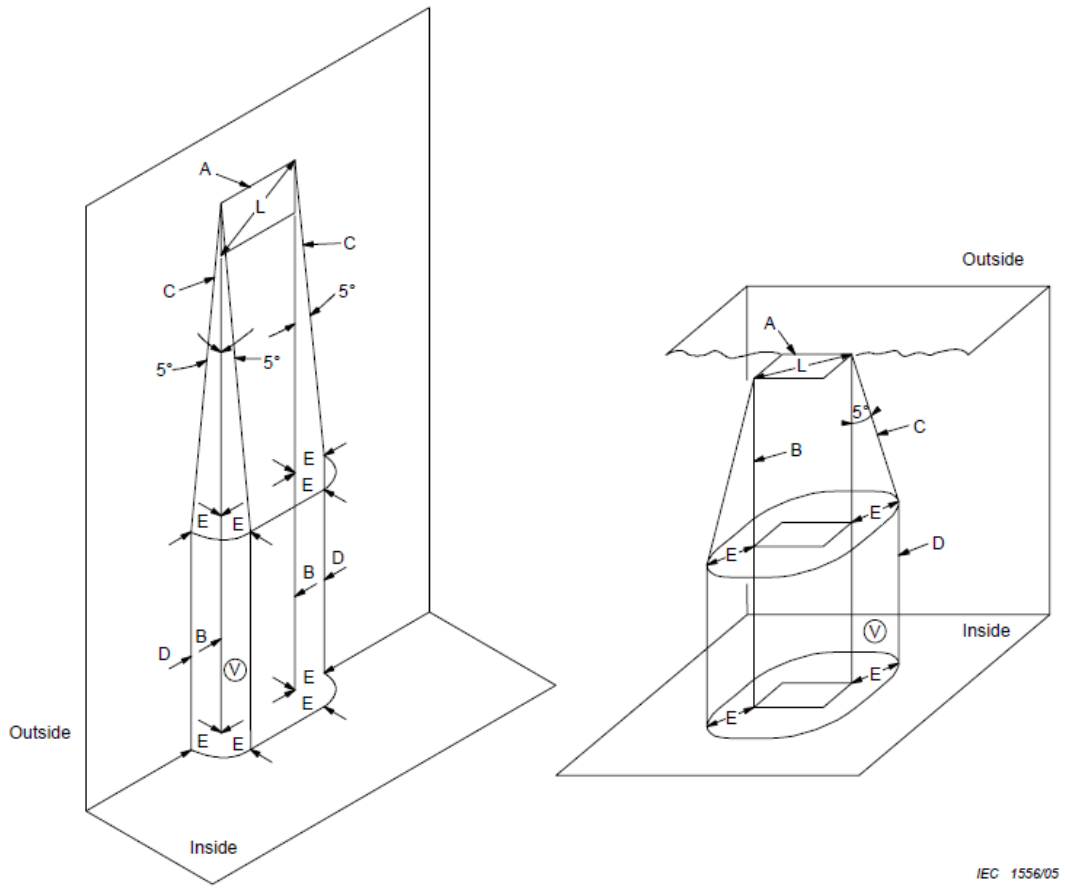

Image 12. Enclosure openings (8, p. 161)

The same requirements apply to the openings of the top and sides of the battery cabinet if there are bare conductive parts within that 5° angle. The components which fill holes in fire enclosures must generally be made of V-1 class materials according to IEC 60695-11-10. (8, p. 159-169.)

In service access areas, bare parts at a hazardous voltage must be located or guarded in a way that unintentional contact with these parts is unlikely during service operations involving other parts of the equipment. They must also be located or guarded in a way that accidental shorting to parts at non-hazardous potentials, e.g. with a tool or a test probe used during service operation, is unlikely. (9, p. 20.)

The cross-sectional areas of internal wires and interconnecting cables must be adequate for the intended current under normal operating conditions, so that the maximum permitted temperature of the conductor insulation is not exceeded. The wire ways must be smooth and free of sharp edges in order to reduce the risk of mechanical damage. If the wire passes through holes in a metal surface, these holes must have smooth, well-rounded surfaces or bushings have to be installed to these holes. Internal wires must also be routed and secured in a manner which reduces excessive strain on the wire and terminal connections, the likelihood of the loosening of terminal connections and the likelihood of damage to the conductor insulation. (9, p. 124.)

4.2 Mechanical Requirements

The mechanical requirements for a battery cabinet concern both the stability and the mechanical strength of a unit. The battery cabinet must not become physically unstable to the degree that it becomes hazardous to an operator or a service person. The unit must not fall over when it is tilted to a 10° angle from its upright position. It must also not fall over when a force of 250 N is applied in any direction to the unit at a maximum height of 2 m. (8, p. 140.)

The battery cabinet must have adequate mechanical strength so that no hazards are created when it is being handled as expected. Components and parts that do no serve as an enclosure must withstand a steady force of 10 N. Parts in an operator access area which are protected by a cover or a door which forms part of the external enclosure must withstand a steady force of 30 N. External enclosures must withstand a force of 250 N for 5 seconds on the sides and top of the enclosure. The force is applied with a suitable test tool that has a circular plane with a diameter of 30 mm. Because battery cabinets weigh more than 18 kg, this requirement does not apply to the bottom of the cabinet.

Impact tests must also be carried out on the external surfaces of the battery cabinet, which can be seen in image 13. In these tests a steel ball with a diameter of 50 mm and a mass of 500 g is dropped from a height of 1.3 m to the horizontal surfaces of the external enclosure. For vertical surfaces the impact resistance is tested by using a pendulum from a vertical distance of 1.3 m. (8, p. 141-142.)

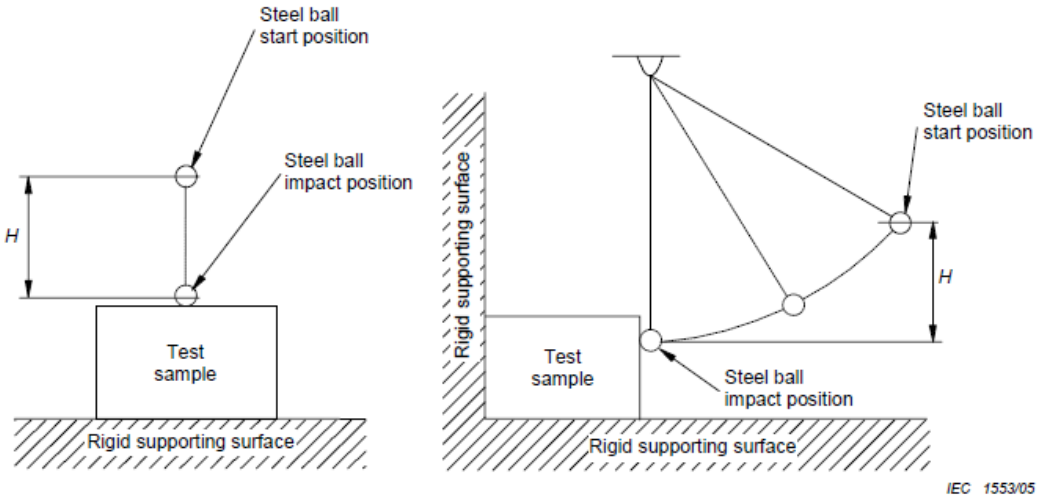

Image 13. Impact test setup (8, p. 143)

The design and construction of a battery cabinet must be such that the risk of injury to an operator is reduced. The edges and corners that can be hazardous should be rounded unless they are required for the functioning of the equipment. Screws, nuts, washers and other similar parts must be able to withstand mechanical stresses occurring during normal use, if the loosening would create a hazard. (8, p. 145-146.)

4.3 Environmental Requirements

The standard regarding environmentally conscious design of electrical products is IEC 62430. This standard states that environmentally conscious design should be based on life cycle thinking, which requires that during the design and development process the environmental aspects of the product in all of its life cycle stages should be taken into consideration. The objective is to:

- minimize the adverse environmental impact of the product
- identify, qualify and if possible quantify the environmental aspects of the product
- consider the trade-offs between environmental aspects and life cycle stages.

The ECD process begins by analyzing the environmental requirements from regulations and stakeholders of the company. These regulations are e.g. limits on the use of

certain environmentally hazardous materials. Then the environmental aspects and impacts of the product must be identified and evaluated. After this the choices of design solutions should be made in a way that a balance between environmental aspects and other considerations, e.g. the function, quality and economic aspects is achieved. Finally, there should be a procedure for the review and continual improvement of environmental aspects of the product throughout its life cycle. (10, p. 8-11.)

5 Battery Cabinets from Other Manufacturers

Battery cabinet manufacturers can roughly be divided into two groups; UPS manufacturers that sell battery cabinets as accessories for their UPS devices and other manufacturers that sell battery cabinets separately. These other manufacturers include e.g. battery manufacturers.

The designs from these different types of manufacturers differ to some extent. Battery cabinets from UPS manufacturers are usually designed with a specific UPS device in mind, which affects e.g. the dimensions and IP classification of the battery cabinet. Battery cabinets from other manufacturers are designed for UPS devices from multiple manufacturers and other uses. They often have a simpler design and might not conform to all of the standards and requirements that battery cabinets from UPS manufacturers conform to. In this chapter the focus will be in battery cabinets from other UPS manufacturers. A comparison between some of the features of battery cabinets from other manufacturers and Eaton's EBC-D and EBC-E battery cabinets can be seen in images 14 and 15.

	UPS power rating	Operating temperature	IP rating	Dimensions (WxDxH) (mm)	Breaker access without access to battery compartment
Socomec Masterys	90 and 108 kW	0 - 40 °C	IP20	800x880x1930	Yes (separate compartment)
ABB CBAT 200	80 - 160 kW	0 - 40 °C	IP20	1200x796x1975	?
ABB CBAT 600	20 - 120 kW	0 - 40 °C	IP20	1200x796x1975	?
Schneider Galaxy VM	160 - 200 kW	0 - 40 °C	?	1080x854x1970	Yes (deadfront)
Eaton EBC-D	50 - 300 kW	5 - 40 °C	IP21	1086x914x1888	Yes
Eaton EBC-E	50 - 300 kW	0 - 40 °C	IP20	1125x804x1890	No

Image 14. Comparison of battery cabinet features

	Casters	Sliding battery shelves	Maximum number of batteries (per string)	Maximum size of batteries	Transport with batteries	Battery shelf coating
Socomec Masterys	No	Yes	40 (40)	?	?	Yes
ABB CBAT 200	No	?	200 (50)	168x125x175 mm, 28 Ah	Yes	?
ABB CBAT 600	No	?	600 (50)	151x98x65, 9 Ah	Yes	?
Schneider Galaxy VM	Yes	Yes	40 (40)	305x173x223, 92,4 Ah	Yes	?
Eaton EBC-D	No	Yes	40 (40)	338x174x277.5, 150 Ah	No	Yes
Eaton EBC-E	Yes	Yes	40 (40)	338x174x277.5, 150 Ah	Yes	No

Image 15. Comparison of battery cabinet features

5.1 Socomec Masterys Battery Cabinet

The Masterys Battery Cabinet type B from Socomec, seen in image 16, is intended to be used with their UPS's ranging from 90 to 108 kW.

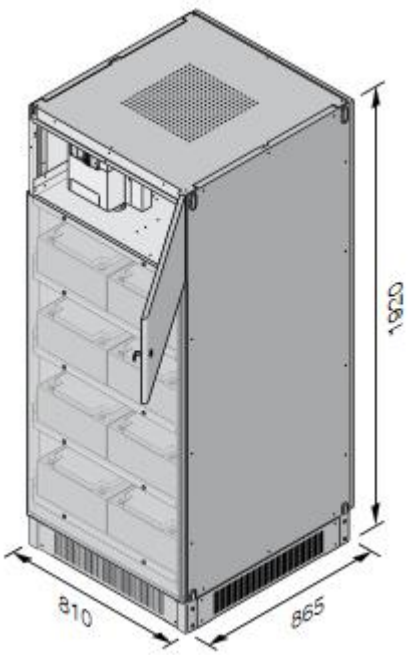

Image 16. Masterys battery cabinet (5)

The battery cabinet has been designed according to standards EN 50272-2 and EN 62040-1, which are the same standards that Eaton battery cabinets are designed to. This battery cabinet is sold with both normal and long-life batteries. The backup times for the Masterys BC 90 and 108 kW UPS's can be seen in image 17. The image shows that the typical backup time for the Masterys BC 120 UPS with two battery cabinets is 66 minutes.

	BC 60		BC 80		BC 100		BC 120	
N° of cabinet	1	2	1	2	1	2	1	2
Cabinet type	A	A/B	A	A	B		B	
Typical BUT (min)(1)	19	60/143	12	42	34	88	28	66
Weight (kg)	788	1690/3480	788	1690	1792	3480	1792	3480

(1) Max BUT @ 70% of the load

Image 17. Masterys BC backup times (5)

The battery cabinet has been height aligned with the Masterys BC 90-108 kW UPS. The dimensions of this battery cabinet are 800x880x1930 mm. The type B battery cabinet has a magnothermal MCCB, which cannot be operated from the outside with the door closed. The battery cabinet has been rated IP20 according to standard IEC 60529. The operating temperature of the battery cabinet is 0-40 °C although 15-25 °C is recommended for a long battery life. These temperatures are the same as recommended by Eaton. (5)

5.2 ABB CBAT-200 & CBAT-600 Battery Cabinets

Similar to Eaton ABB's battery cabinets can be used with multiple UPS ranges, depending on the model of the battery cabinet. The CBAT-200 has versions for the Conceptpower DPA, DPA UPScale and PowerWave 33 ranges. The CBAT-600 battery cabinet has been designed for the DPA UPScale ST120. In ABB's battery cabinets the number of batteries in a single battery string can vary considerably more than in Eaton's battery cabinets. In the CBAT-200 and CBAT-600 the number can vary between 20 and 50 batteries per string, whereas with Eaton's battery cabinets the length of the battery string is usually 40 batteries because of requirements from the UPS. They also use smaller 7 or 9 Ah batteries in these large battery cabinets, and therefore the total number of batteries in one battery cabinet can be as high as 600. In Eaton's EBC-D and EBC-E battery cabinets only larger batteries, at least 64 Ah, are currently used, so the number of batteries in one cabinet is 40.

The backup times for the CBAT-600 S battery cabinet, with different loads, can be seen in image 18. The picture shows that with 12 strings of 9 Ah batteries, 48 batteries per string, the backup time for a 120 kW load is 12 minutes.

Autonomy table for DPA UPScale ST120 – 20 kW modules

Load power in kW / Autonomy in minutes	5 min.	6 min.	8 min.	10 min.	12 min.	15 min.	20 min.	25 min.	30 min.	40 min.	60 min.
20 kW	1 x 2 x 48 x 7.2 Ah	1 x 2 x 48 x 7.2 Ah	1 x 2 x 50 x 7.2 Ah	1 x 2 x 48 x 9 Ah	1 x 2 x 48 x 9 Ah	n.a.	n.a.	n.a.	n.a.	n.a.	n.a.
40 kW	2 x 2 x 48 x 7.2 Ah	2 x 2 x 48 x 7.2 Ah	2 x 2 x 50 x 7.2 Ah	2 x 2 x 48 x 9 Ah	2 x 2 x 48 x 9 Ah	n.a.	n.a.	n.a.	n.a.	n.a.	n.a.
60 kW	3 x 2 x 48 x 7.2 Ah	3 x 2 x 48 x 7.2 Ah	3 x 2 x 50 x 7.2 Ah	3 x 2 x 48 x 9 Ah	3 x 2 x 48 x 9 Ah	n.a.	n.a.	n.a.	n.a.	n.a.	n.a.
80 kW	4 x 2 x 48 x 7.2 Ah	4 x 2 x 48 x 7.2 Ah	4 x 2 x 50 x 7.2 Ah	4 x 2 x 48 x 9 Ah	4 x 2 x 48 x 9 Ah	n.a.	n.a.	n.a.	n.a.	n.a.	n.a.
100 kW	5 x 2 x 48 x 7.2 Ah	5 x 2 x 48 x 7.2 Ah	5 x 2 x 50 x 7.2 Ah	5 x 2 x 48 x 9 Ah	5 x 2 x 48 x 9 Ah	n.a.	n.a.	n.a.	n.a.	n.a.	n.a.
120 kW	6 x 2 x 48 x 7.2 Ah	6 x 2 x 48 x 7.2 Ah	6 x 2 x 50 x 7.2 Ah	6 x 2 x 48 x 9 Ah	6 x 2 x 48 x 9 Ah	n.a.	n.a.	n.a.	n.a.	n.a.	n.a.

Color codes for appropriate battery cabinet:
CBAT-DPA UPSCALE-600 S

Image 18. Backup times for CBAT-600 S (6)

Backup times for CBAT-200 are shown in image 19. The image shows that with 4 strings of 28 Ah batteries, 50 batteries per string, the backup time for a 160 kW load is 8 minutes. The 12 minute runtime for a 120 kW load can be reached with 4 strings of 28 Ah batteries, 48 batteries per string.

Autonomy table for Conceptpower DPA

Load power in kW / Autonomy in minutes	5 min.	6 min.	8 min.	10 min.	12 min.	15 min.	20 min.	25 min.	30 min.	40 min.	60 min.
24 kW	1 x 40 x 28 Ah*	1 x 40 x 28 Ah*	1 x 40 x 28 Ah*	1 x 40 x 28 Ah*	1 x 40 x 28 Ah	1 x 42 x 28 Ah	1 x 46 x 28 Ah	2 x 40 x 28 Ah*	2 x 40 x 28 Ah	2 x 40 x 28 Ah	3 x 40 x 24 Ah*
32 kW	1 x 40 x 28 Ah*	1 x 40 x 28 Ah*	1 x 40 x 28 Ah	1 x 44 x 28 Ah	1 x 48 x 28 Ah	2 x 40 x 28 Ah*	2 x 40 x 28 Ah	2 x 40 x 28 Ah	2 x 44 x 28 Ah	3 x 40 x 28 Ah*	3 x 46 x 28 Ah
40 kW	1 x 42 x 28 Ah	1 x 44 x 28 Ah	1 x 50 x 28 Ah	2 x 40 x 28 Ah*	2 x 40 x 28 Ah*	2 x 40 x 28 Ah*	2 x 40 x 28 Ah	2 x 46 x 28 Ah	3 x 40 x 28 Ah*	3 x 46 x 28 Ah	4 x 44 x 28 Ah
48 kW	1 x 50 x 28 Ah	2 x 40 x 28 Ah	2 x 40 x 28 Ah*	2 x 40 x 28 Ah*	2 x 40 x 28 Ah*	2 x 42 x 28 Ah	2 x 46 x 28 Ah	3 x 40 x 28 Ah	3 x 44 x 28 Ah	4 x 40 x 28 Ah	n.a.
64 kW	2 x 40 x 28 Ah*	2 x 40 x 28 Ah*	2 x 40 x 28 Ah	2 x 44 x 28 Ah	2 x 48 x 28 Ah	3 x 40 x 28 Ah*	3 x 42 x 28 Ah	3 x 50 x 28 Ah	4 x 44 x 28 Ah	n.a.	n.a.
72 kW	2 x 40 x 28 Ah*	2 x 40 x 28 Ah*	2 x 44 x 28 Ah	2 x 50 x 28 Ah	3 x 40 x 28 Ah	3 x 42 x 28 Ah	3 x 46 x 28 Ah	4 x 42 x 28 Ah	4 x 50 x 28 Ah	n.a.	n.a.
80 kW	2 x 42 x 28 Ah	2 x 44 x 28 Ah	2 x 48 x 28 Ah	3 x 40 x 28 Ah*	3 x 40 x 28 Ah*	3 x 46 x 28 Ah	4 x 40 x 28 Ah	4 x 46 x 28 Ah	n.a.	n.a.	n.a.
96 kW	3 x 40 x 28 Ah*	3 x 40 x 28 Ah*	3 x 40 x 28 Ah*	3 x 44 x 28 Ah	3 x 48 x 28 Ah	4 x 42 x 28 Ah	4 x 46 x 28 Ah	n.a.	n.a.	n.a.	n.a.
120 kW	3 x 42 x 28 Ah	3 x 44 x 28 Ah	3 x 48 x 28 Ah	4 x 40 x 28 Ah	4 x 44 x 28 Ah	n.a.	n.a.	n.a.	n.a.	n.a.	n.a.
128 kW	3 x 46 x 28 Ah	3 x 48 x 28 Ah	4 x 40 x 28 Ah	4 x 44 x 28 Ah	4 x 48 x 28 Ah	n.a.	n.a.	n.a.	n.a.	n.a.	n.a.
160 kW	4 x 42 x 28 Ah	4 x 44 x 28 Ah	4 x 50 x 28 Ah	n.a.	n.a.	n.a.	n.a.	n.a.	n.a.	n.a.	n.a.
200 kW	n.a.	n.a.	n.a.	n.a.	n.a.	n.a.	n.a.	n.a.	n.a.	n.a.	n.a.

Color codes for appropriate battery cabinet:
CBAT-DPA 120
CBAT-DPA 200

* Battery configuration gives more autonomy than indicated; the battery blocks may be reduced if the UPS is partially loaded. Refer to the product datasheet.

Image 19. Backup times for CBAT-DPA 200 (6)

The dimensions of the CBAT-200 and CBAT-600 battery cabinets are 1200x1975x796 mm. This means they are about 100 mm wider and higher than Eatons EBC-D and EBC-E battery cabinets. (6)

5.3 APC by Schneider Electric Galaxy VM back up time cabinet IEC wide A

The Galaxy VM back up time cabinet IEC wide A battery cabinet is designed for the Galaxy VM UPS range. The cabinet has been designed according to standard EN 62040-1 and is also seismically rated, which most of Eaton's battery cabinets are not. The cabinet also has sliding battery shelves to ease maintenance and installation of batteries. The dimensions of the battery cabinet are 1970x1080x854 mm. As image 20 shows, the cabinet has hinged doors like the EBC-D and EBC-E battery cabinets, but unlike them it also has a separate dead front in addition to the outer door.

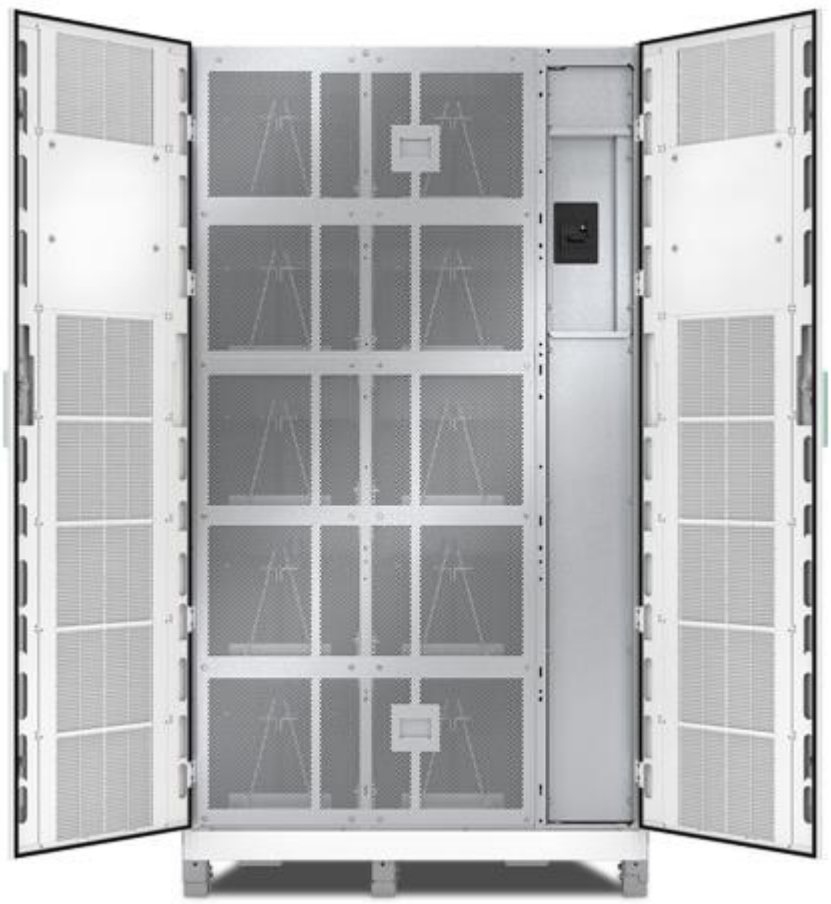

Image 20. Galaxy VM battery cabinet (7)

The operating temperature of the battery cabinet is 0-40 °C. Like Eaton's battery cabinets, this cabinet is also mounted on wheels to ease installation. (7)

6 EBC-D and EBC-E Battery Cabinet Designs

Currently, two of the battery cabinets that Eaton offers, the EBC-D and EBC-E battery cabinets, are very similar to each other. They are both sold with the same batteries and battery breakers. The EBC-E battery cabinet, seen in image 21, was originally designed for the 9130 UPS, which is no longer sold. It was intended to be used with large batteries and power ratings. It is more robust than the EBC-D battery cabinet, because it is based on a seismic rated design, i.e. a design intended to be used in areas which are prone to earthquakes.

Image 21. EBC-E battery cabinet

The EBC-D battery cabinet, in image 22, was designed as the large battery cabinet option for the 93PM UPS. Because of this, the battery cabinet has a similar appearance and outer dimensions as the 93PM UPS device. The cable entry holes are also in

the same place as in the 93PM UPS devices to facilitate cabling through the side plates.

Image 22. EBC-D battery cabinet

Like the EBC-E battery cabinet, it was designed for large batteries and power ratings. The design was intended to be inexpensive. The cabinet was not intended to be shipped with batteries installed, because the design is not sturdy enough and the cabinet originally did not have slidable battery shelves, so the batteries could not be tied onto the shelves. The EBC-D battery cabinet was designed from the beginning to conform to European safety standards, e.g. the battery shelves were painted and the battery breaker could be operated before opening the door, whereas the EBC-E cabinet is based on an American design which was modified in order to conform with European safety standards. The EBC-D cabinet was also designed for Eaton's own range of battery breakers, whereas the EBC-E cabinet originally used ABB's circuit breakers. Later, the EBC-E battery cabinet was modified to accommodate the use of Eaton's battery breakers.

6.1 Cost Structures

Cost structures for EBC-D and EBC-E battery cabinets were compiled in order to see where cost optimization would be most useful. The charts were made based on BOMs that were sent by the subcontractors. The battery cabinet cost structure was divided into nine parts:

- mechanics
- electro mechanics
- cables
- manuals
- labels and logos
- packaging material
- assembly
- overhead and profit
- transportation.

Mechanics include all of the sheet metal parts used in the battery cabinets, as well as the rivets, screws and bus bars. Electro mechanical parts are the circuit breaker and terminal blocks. Cables include grounding and signal cables, as well as the battery

cables. Manuals include the safety and installation manuals supplied with the battery cabinets. Labels and logos include the wiring and safety labels and Eaton's logos. Packaging material includes the pallet that the battery cabinet is shipped on as well as the cardboard box in which it is shipped. Assembly is the cost of assembling the battery cabinet. Overhead and profit include the operating costs for the subcontractor and the profit taken for each cabinet. The cost of the batteries themselves are not included.

Figure 1 shows the relative cost structures of empty EBC-D and EBC-E battery cabinets, i.e. cabinets that are assembled without batteries. The costs were compared to the total cost of the EBC-D battery cabinet, which was given a value of 1. The figure shows that the EBC-E cabinet is approximately 5 % more expensive than the EBC-D battery cabinet.

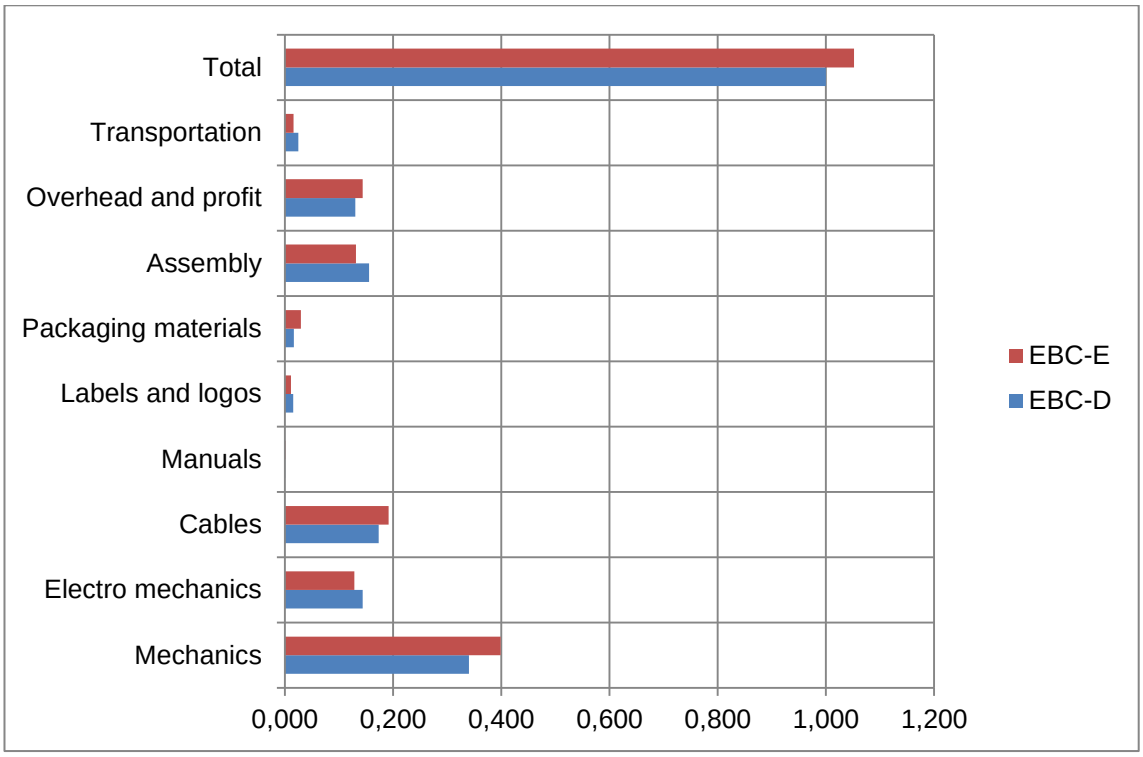

Figure 1. EBC-D and EBC-E relative cost structures

The main reason that the EBC-E cabinet is more expensive is the mechanics, i.e. the sheet metal parts of the battery cabinet, which are 17 % more expensive in the EBC-E cabinet. Cabling, overhead and profit are also more expensive in the EBC-E cabinet, by 11 % and 10 % respectively. The EBC-D battery cabinet is more expensive in terms of assembly and electro mechanics, which are 19 % and 12 % more expensive in the

EBC-D cabinet. These are the categories that have the potential for the most significant cost savings. Transportation, packaging materials, labels and logos and manuals constitute such a small part of the overall cost of the product that possible savings from them would be small. Overheads and profit, although they constitute a reasonably significant portion of the overall cost of the battery cabinets, are a portion of the cost structure that Eaton can only a limited effect on, except by reducing the overall cost of the battery cabinets in other ways.

7 Battery Cabinet Optimization

In order to create a concept for a battery cabinet that would replace the current EBC-D and EBC-E battery cabinets, the prices for the features and design solutions of the battery cabinets were established. Because many features and design solutions affect multiple parts, these prices are estimations, since the effects of a particular feature on the overall cost of a part are difficult to specify accurately without designing a version of this part that does not have this feature. Features can be requirements that arise either from safety standards, as discussed in chapter four, or requirements that Eaton has for its products. Design solutions refer to design decisions made by the mechanical engineer.

7.1 Battery Cabinet Features

The features that were examined in this thesis include:

- optimizing the external dimensions of the battery cabinets with UPS devices
- required backup times for battery cabinets
- cabling from the battery cabinet either to another battery cabinet or to the UPS
- specified operating temperature
- classified IP protection
- readiness for marine option
- mobility when batteries are installed

- safety requirements.

7.1.1 Optimizing External Dimensions with UPS Devices

Optimizing the battery cabinets based on the dimensions of the UPS devices can lead to expanding the battery cabinet range beyond what is necessary from a technical and marketing standpoint. This will lead to smaller sales numbers for individual battery cabinets, which in turn increases the cost of individual cabinets. From a technical standpoint, the important aspects of a battery cabinet are the battery breaker and the Ah rating of the batteries used, which in the EBC-D and EBC-E cabinets are both the same. From a marketing standpoint the most important dimension of a battery cabinet is its depth. This dimension should not be greater than the depth of the UPS device it is used with. The height of the battery cabinet is not as critical. Having a battery cabinet with the same height as the UPS device is visually advantageous, but this does not have a major impact on the sales volumes of the battery cabinets or UPS devices, especially with larger battery cabinets, such as the EBC-D and EBC-E cabinets. The width of the battery cabinets should be minimized in order to minimize the space requirement.

Currently the parts for the EBC-D battery cabinet are produced with an order quantity of 10. If this was increased to 20, the overall cost of the EBC-D battery cabinet would decreased by approximately 7 %. Combining the two battery cabinets should increase the order quantities, which would reduce the cost of the cabinet compared to the EBC-D or EBC-E cabinet. Increasing the order quantities by storing battery cabinets at a warehouse would be one option, but this also has some problems. Firstly, the cost of storage could be far larger than the gain in order quantity, since the sales of the battery cabinets are irregular and hard to predict, and therefore the storage times could be very long. Secondly, when ECO changes are made into the products, these changes would not take effect until the battery cabinets in storage have all been sold, which could be problematic.

7.1.2 Required Backup Times and Cable Entry Holes

The required backup times for battery cabinets depend on the UPS device that they are used with. This backup time requirement can affect the length and number of battery strings used, as well as the type of battery used. The UPS devices also require a cer-

tain voltage from the batteries, which reduces the amount of flexibility in the length of the battery string. In October, the least expensive battery types used at Eaton, in terms of cost per kWh, were CSB Batteries 9 Ah batteries. These, however, would require significantly more cabling than batteries with larger Ah ratings. Practically speaking the maximum number of battery strings installed in parallel should not exceed 6 strings. If the internal batteries of the UPS are of a notably different capacity than the batteries in the external battery cabinet, the different impedances of the battery strings could cause problems. Overall, when taking into account the cabling and the risk of malfunction, which increases when the number of batteries and connections are increased, the most cost effective batteries, on EBC-D and EBC-E back up time ranges, are CSB's larger batteries, e.g. 100 Ah rated battery. These large batteries can offer a good backup time without requiring multiple strings of batteries. The amount of optimization by battery types should be kept as low as possible in order to facilitate the use of as many different types of batteries as possible. This makes inviting tenders from battery manufacturers easier, which can help reduce their cost.

Currently the EBC-D battery cabinet has cable entry holes on all sides, whereas the EBC-E cabinet only has cable entry holes in the roof plate and the bottom plate, as seen in images 23 and 24. Cabling from the side is possible in the EBC-E cabinet if the side plate is removed. However, the bottom battery plate is lower than in the EBC-D battery cabinet, which makes this more difficult when the EBC-E cabinet is used with the 93PM UPS device. Since the knockouts, holes and flange plates necessary to enable cabling through the outer plates only increase the cost of a product by a small amount, having them on all sides should be considered.

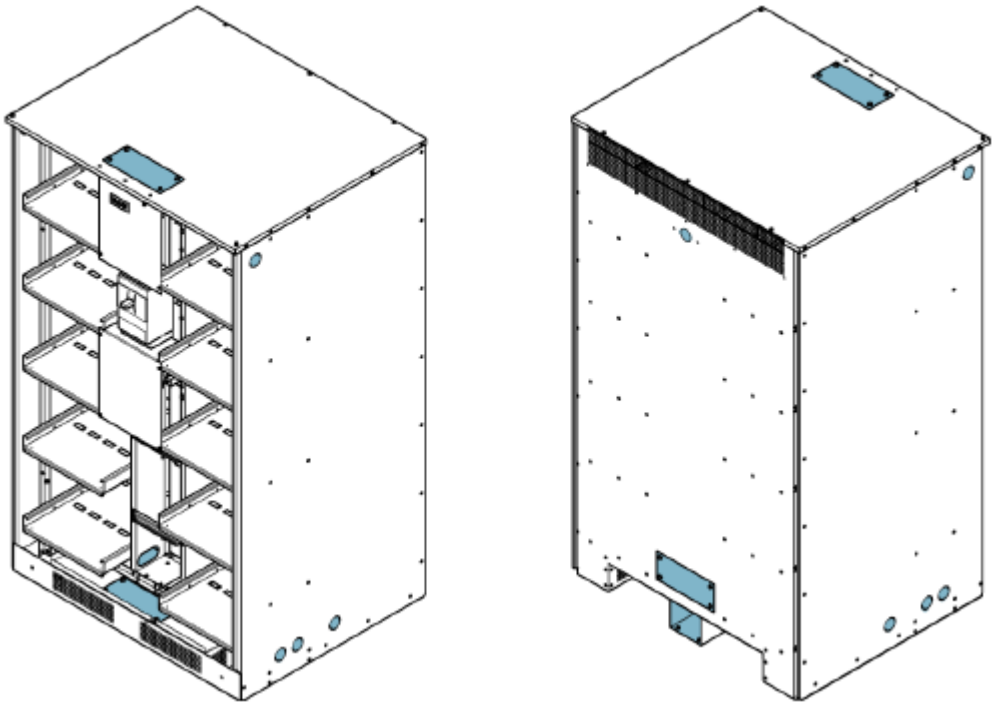

Image 23. EBC-D cable entries

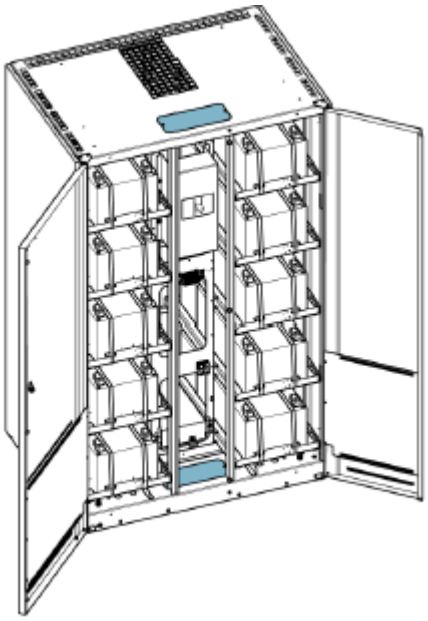

Image 24. EBC-E cable entries

7.1.3 Specified Operating Temperature and IP Protection

The specified operating temperature for the battery cabinets is from +5 °C to +40 °C in the EBC-D cabinet and from 0 °C to +40 °C in the EBC-E cabinet. Reducing the maximum operating temperature, e.g. to 25 °C, which is the recommended operating temperature for most batteries, would make it possible to reduce the size of the ventilation holes in the doors and rear plates. This would have only a small effect on part prices, since the ventilation holes are punched with cluster tools and some holes would still need to be punched even if the maximum operating temperature is +25 °C. It is also advantageous that the operating temperature range for the battery cabinet is the same as it is in the UPS devices, which have the +5 °C to +40 °C range. Competitors also have recommended operating temperatures from +5 °C to +40 °C.

The current IP classifications for the EBC-D and EBC-E battery cabinets are IP21 and IP20, respectively. The difference with these is that the EBC-E has ventilation holes in the roof, which means it is not protected against vertically falling drops of water. In the EBC-D battery cabinet the ventilation holes at the top of the cabinet are in the rear plate, which means the roof is closed, so it has the IP21 classification. Having an IP21 classification can be advantageous, especially since it can be achieved with practically no extra cost. Since the ventilation holes are in rear plate, the EBC-D cabinet needs a 100 mm clearance from the rear of the cabinet. The UPS devices do not necessarily require clearances in the rear, so the battery cabinet should be designed in a way that the depth, with rear clearance included, is not greater than the depth of the UPS device.

7.1.4 Readiness for Marine Option and Mobility

The readiness for marine options will also have an effect on the standard models. At the very least screw holes have to be added, which can be used to attach the dampers required in marine UPS devices or battery cabinets. Depending on how robust the standard model is, further strengthening parts will also have to be added to the frame. Overall a marine option can increase the cost of the standard model up to 10 %. Marine devices will also require separate halogen-free battery cables.

When batteries are installed in the EBC-E battery cabinet, mobility is currently achieved by using eight caster wheels attached to the base of the battery cabinet. This solution

is problematic, because of two reasons. Firstly, the cabinets can weigh up to 2200 kg, so moving them manually is difficult. Secondly, if the floor where the battery cabinets are installed on is soft, e.g. plastic, the wheels tend to sink into it. This makes moving the battery cabinets even more difficult. The wheels are also quite an expensive part, since they form approximately 3.3 % of the total cost of the EBC-E battery cabinet.

7.1.5 Safety Requirements

Regarding the safety requirements, Eaton's battery cabinets are in some instances exceeding the requirements set in the standards, which could be a source of cost savings. Since the batteries used in the EBC-D and EBC-E cabinets are all VRLA batteries, the battery shelves do not necessarily need to be painted to satisfy the requirements set in standard IEC 60950-1. Currently, the EBC-E battery shelves, seen in image 25, are not painted. The painting can, however, have an effect on how well the batteries slide on the shelf, as well as how well the shelf itself slides on its supports.

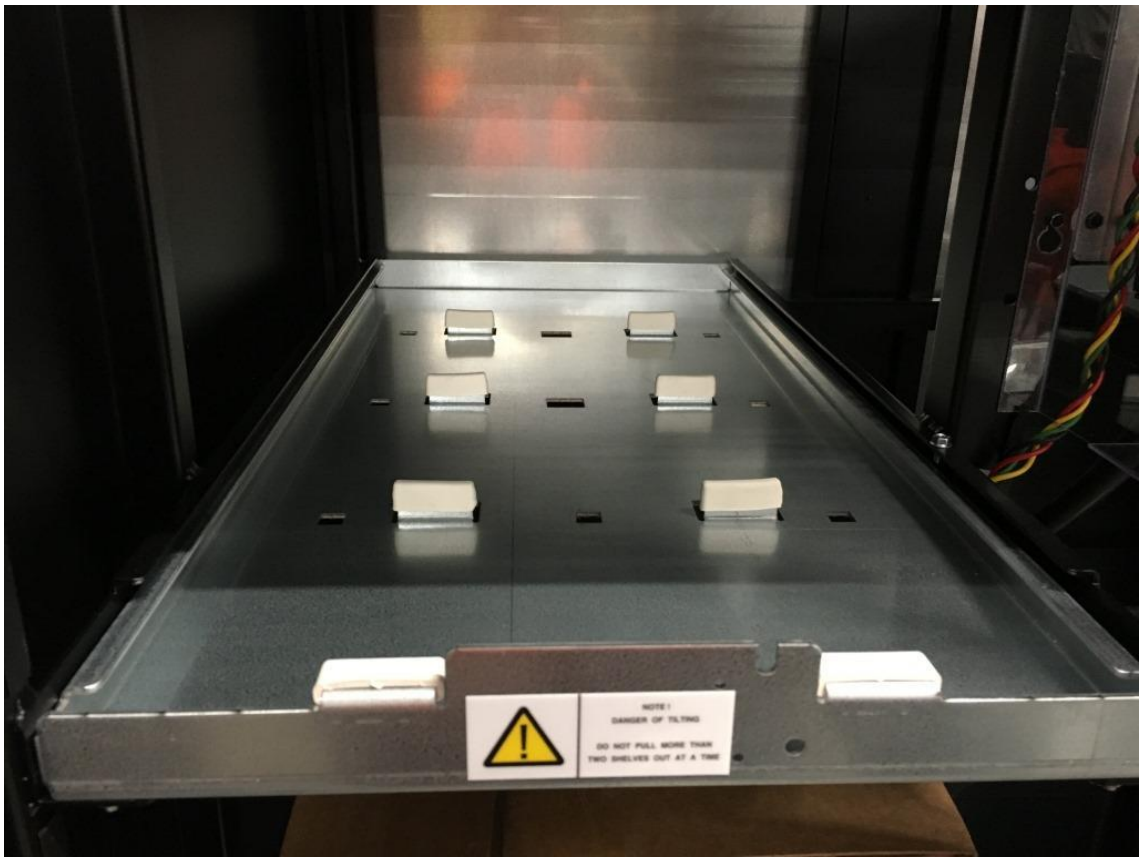

Image 25. EBC-E battery shelf

Shields have been added on both doors to increase the safety of the cabinets and to improve their appearances. The EBC-D door and its shield can be seen in image 26. Even though the electrical safety requirements would be fulfilled without the shields, they have been added to prevent the customer or service person from accidentally making contact with high voltage parts with a small object e.g. a screwdriver. They also improve the appearance of the cabinet since the batteries are not visible from the outside.

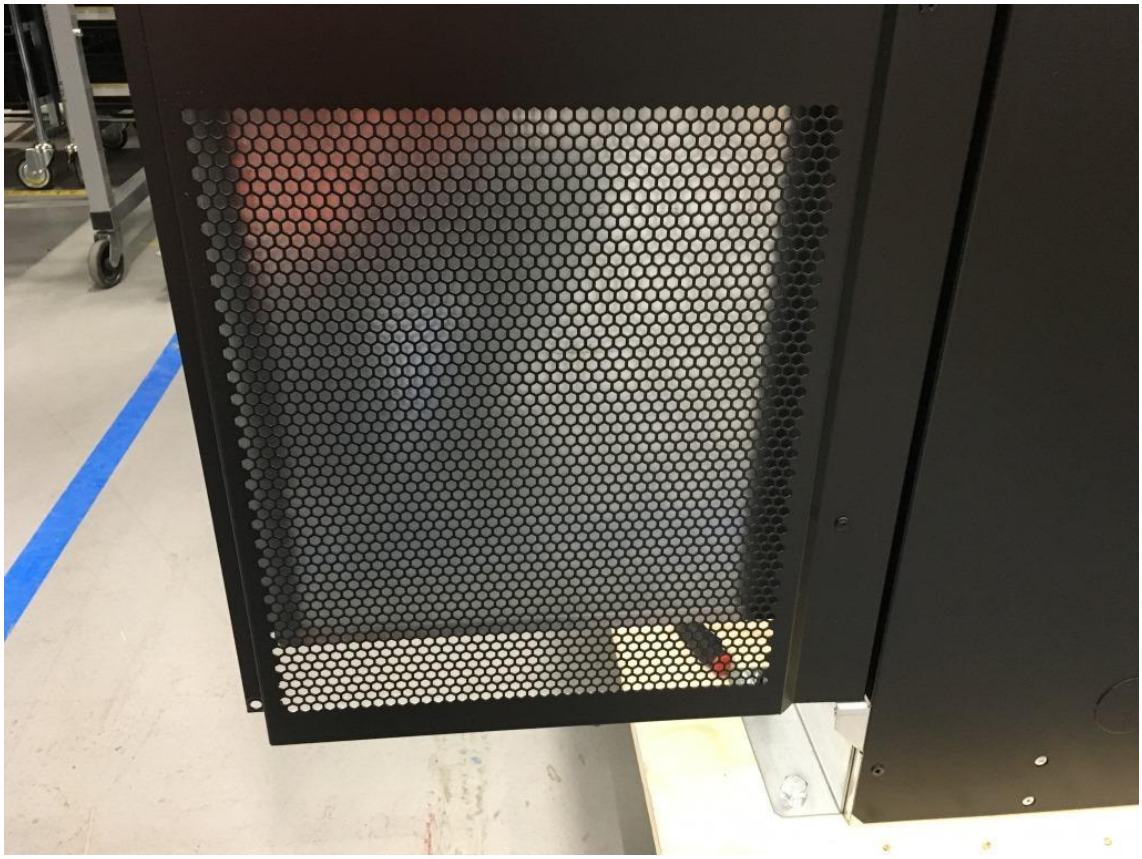

Image 26. EBC-D battery cabinet door

In the EBC-D and EBC-E battery cabinets, the service area is the area that can be accessed when the doors have been opened. In this area, accidental contact with hazardous parts has been prevented by using clear polycarbonate plate to cover the battery breaker poles and by placing pole covers on poles of the first of the four batteries on each battery shelf. Image 27 shows the clear polycarbonate plates in EBC-D which prevent accidental contact with the power cable connections.

Image 27. EBC-D battery breaker assembly

The hydrogen ventilation requirements in standard IEC 62040-1 are fulfilled in both battery cabinets. By inserting the following values into formula 1, the necessary size of the inlet and outlet ventilation openings can be calculated. In both the EBC-D and EBC-E battery cabinets the required size is 407 cm^2. The size of the ventilation inlets and outlets exceeds this requirement in both battery cabinets.

7.2 Battery Cabinet Design Solutions

The design solutions examined in this thesis include:

- battery cabinet frame construction and assembly
- using common parts in multiple products and minimizing separate parts in one battery cabinet
- using bus bars in place of cables and
- battery shelves.

The EBC-E battery cabinet has a frame that is assembled separately before the outer plates are installed. The EBC-D cabinet has a frame design that is partly integrated with the rear plate i.e. the battery shelves are riveted directly into the rear plate. Using this kind of design where the outer plates are load-bearing may cause some issues. Firstly, it is difficult to make this kind of structure strong enough so that the battery cabinet could be shipped with batteries installed. Secondly, assembling this kind of structure is difficult, since the rear plate has to be installed early in the assembly process, which can limit access and visibility to other parts of the battery cabinet.

The assembly methods for the two battery cabinet frames are different. The EBC-D frame is assembled by riveting, whereas the EBC-E frame is welded. It was assumed that assembling the frame by welding was more expensive, however, according to the costed BOM's received from the subcontractor, assembly work on the EBC-E battery cabinet is actually slightly less expensive than in the EBC-D battery cabinet. This is because the EBC-D battery cabinet may be difficult to assemble. Many of its parts, e.g. the battery shelves and the side plates, require holding down and in some cases two people in order to be riveted. The EBC-E battery cabinet on the other hand is welded and the subcontractor has a jig that holds the frame together while it is being welded. This cabinet has also been manufactured for a longer time, so they have had time to improve their assembly process more than with the EBC-D battery cabinet. This can take time, especially since the annual sales numbers for the large battery cabinets are quite low. Because of the welding requirements the EBC-E frame is manufactured from hot or cold rolled steel, which is less expensive than the zinc coated steel used in the EBC-D frame. On the other hand the EBC-E frame has to be painted after welding, which increases the cost.

Using common parts in multiple products and minimizing separate parts in one battery cabinet will increase the production numbers for individual parts, which will reduce their cost. It will also decrease the number of titles the subcontractor will have to keep in inventory, which will reduce their storage costs. This should reduce the overhead costs

associated with all products, not just the EBC-D and EBC-E battery cabinets discussed in this thesis. Implementing these parts into the current UPS devices and battery cabinets would be laborious and expensive, but this should be kept in mind when designing future battery cabinets. Examples of parts that could be common in multiple products include frame posts which could be made from standardized C-profile, seen in image 28. They could be cut into the desired length depending on the size of the product being assembled. Using more common and standardized parts would also reduce the time to market, which would reduce R&D costs.

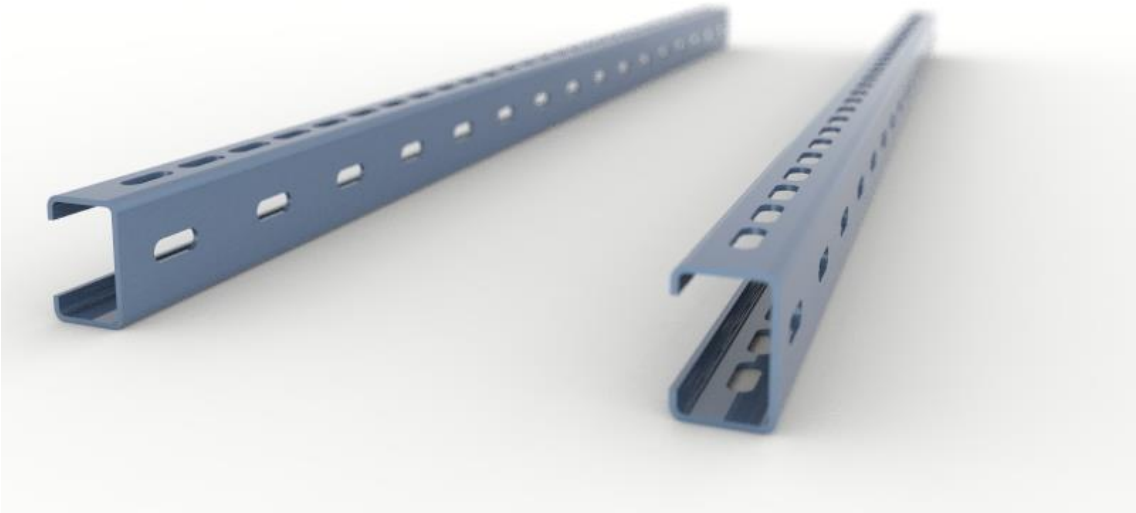

Image 28. C-profile

Currently the connections between battery poles are made with cables. It would also be possible to use bus bars in these connections. Bus bars are generally less expensive than cables of equal lengths. Bus bars can also be easier to install since they are rigid. There are some issues with using bus bars however. Since they are rigid, separate bus bars would likely be needed for different batteries, because battery sizes are not standardized. This will make the BOM structure of the battery cabinets much more complicated, as well as increasing storage costs. Cables are flexible, so the same set

can be used with multiple different battery sizes, as long as the battery terminals are the same size. Because of the rigidity, batteries or the bus bars can also be damaged during transportation, since the batteries will move slightly. Because of these reasons, continuing to use cables is justified.

At present the battery shelves are manufactured by cutting and manually bending from sheet metal. Another option for their manufacture would be to use dies that would enable the manufacturing of the battery shelves with fewer processing steps, since they could bend the desired shape with one punch. This would, however, require the redesign of the battery shelf, since it is not cost-effective to manufacture the current battery shelves with this method. If this type of battery shelf is produced, it should be designed in co-operation with a subcontractor specialized in sheet metal production, in order to make the design as sound as possible.

Another possibility would be to manufacture the battery shelves from grates, as seen in image 29. This type of grate could be cut into size depending on the battery cabinet it would be used in, so essentially the same material could be used in multiple battery cabinets. This would increase the purchasing quantities, which in turn can decrease the cost of the individual battery shelf. This will also enable the easy use of different batteries, since the batteries could easily be tied into the shelf and they would be well ventilated. The shelves could also be manufactured from plastic. In this case, however, the shelves would have to be thicker in order to achieve sufficient strength to support the batteries. In the current battery cabinet designs there is not much room to increase the thicknesses of the battery shelves without also increasing the overall height of the battery cabinet. This might become an issue, since the height of the battery cabinets should preferably be under 2000 mm. The heights of the current EBC-D and EBC-E battery cabinets are 1875 mm and 1872 mm respectively, so depending on how much the thickness of the battery shelf would have to be increased, this might become an issue. Using plastic shelves would mean that there would not be any risk of the batteries shorting on the shelf.

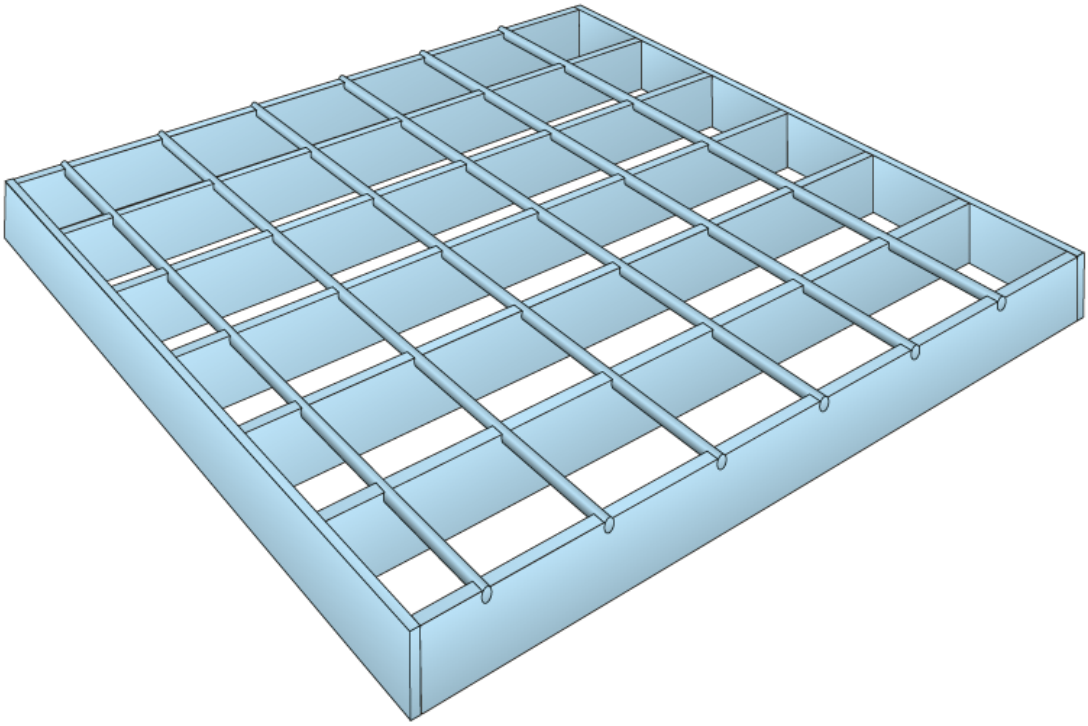

Image 29. Compression welded grate

In order for a grate to be used, the battery shells will need to withstand the increased stress, since the assembly surface is no longer completely flat. The material for battery shells is polypropylene. With a load of 1.45 MPa, polypropylene will start to deform at a temperature of 60-65 °C, and with a load of 0.45 MPa this temperature is increased to 100-105 °C (11). With the type of batteries used in the battery cabinets, this load will likely not exceed 0.1 MPa and the internal temperatures of the battery cabinets should not, under normal operating conditions, reach deformation temperatures.

8 Combining EBC-D and EBC-E Battery Cabinets

When combining the EBC-D and EBC-E battery cabinets, the EBC-E battery cabinet was used as a base. Since the EBC-D battery cabinet was never designed to be shipped with batteries, strengthening it to enable shipping would be difficult and would likely result in a design that would not offer cost savings compared to the current EBC-E battery cabinet.

8.1 Frame Design

The base assembly can be seen in image 30 and 31. The design is similar to the 93PM 500kW UPS device. This will allow the battery cabinet to be lifted with a forklift from all four directions which would remove the need for casters currently used in the EBC-E cabinet. The expensive lifting supports and screws could also be removed. The battery cabinet would still need supports to attach it to the pallet, but these could be made from e.g. 3 mm thick steel instead of the 5 mm currently used. The pallet could even be eliminated completely if the base itself was strong enough to comply with transportation demands. If necessary, kick plates could be attached to the base to improve the appearance. Shipping battery cabinets without a pallet has been tested before, but the bottom parts of the cabinets were damaged during transportation, so this was abandoned.

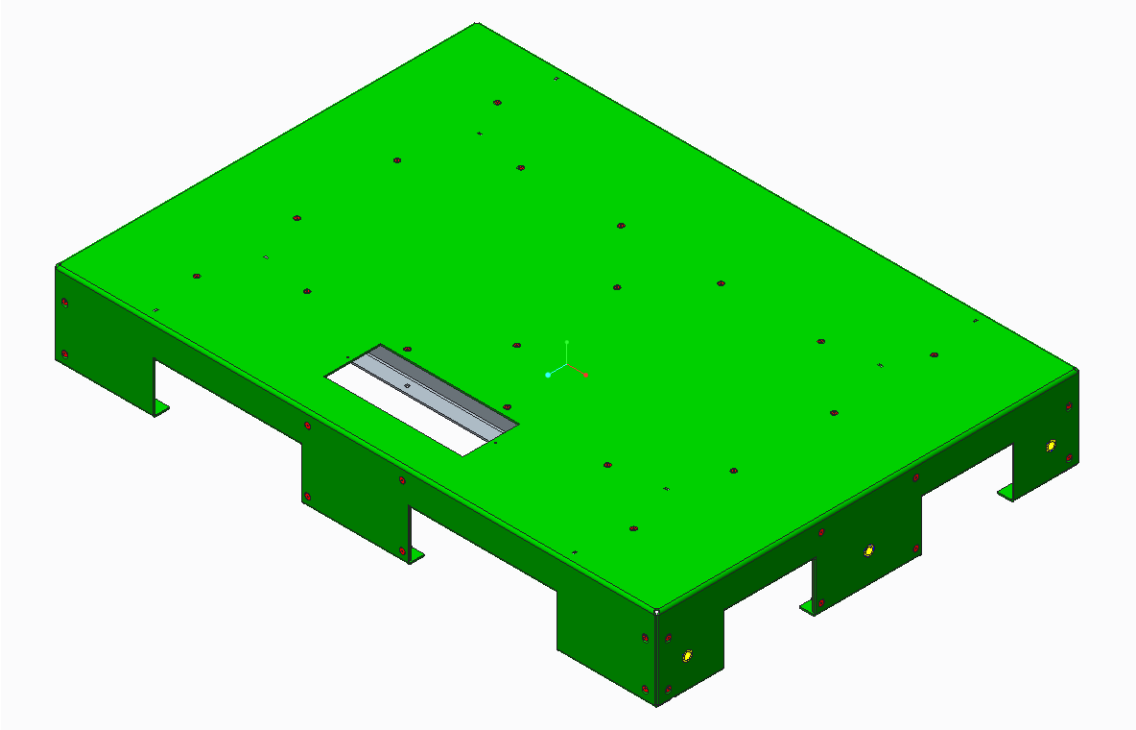

Image 30. Base assembly top view

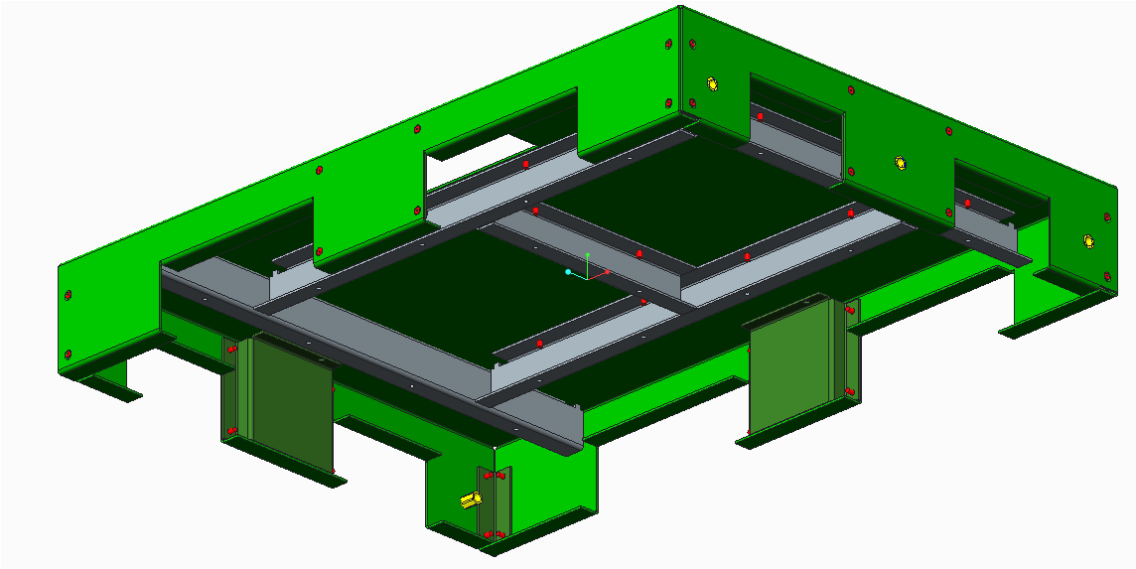

Image 31. Base assembly bottom view

The base will have supports at the bottom for the forklift. It will also have support on the edges and sides to add rigidity. More supports will likely need to be added in order for the design to withstand the extra weight of the battery cabinet compared to the 93PM 500kW UPS device, which weighs approximately 1000 kg. Depending on the batteries used the EBC-E battery cabinet can weigh up to 2228 kg.

Even though the welded EBC-E currently has lower frame assembly costs than the riveted EBC-D model, riveting might still be less expensive in the combined battery cabinet. Currently the subcontractor has set the price for the welding of the EBC-E frame approximately 50 € too low. This will most likely be corrected in the combined battery cabinet, even if only the base is changed, which will result in the two battery cabinets assembly costs being approximately equal. In addition, welding is a more specialized skill than riveting. If the cabinet is riveted, it is easier to invite tenders from other possible subcontractors, since not all sheet metal manufacturers have qualified welders available. The welded EBC-E battery cabinet has also been manufactured for a longer time and with larger quantities, so the manufacturing process has been streamlined more than with the EBC-D cabinet.

To make the riveted cabinet less expensive, the problems that arose in the EBC-D battery cabinets assembly should be addressed. Many of the frame parts required supporting during the assembly, which means that two people can be required in the assembly process. In the EBC-G battery cabinet, notches are cut into the base plate and

side plates which help guide the pieces into place, as seen in image 32. With the current EBC-D battery cabinet e.g. the installation of the battery shelves can take up to 120 minutes, according to the subcontractor. The length of the installation process could be reduced considerably by making notches into the frame posts where the battery shelf supports would lock into before being riveted. The EBC-G battery cabinet also has horizontal flanges at the bottom which both help support the component before it is fastened as well make the assembly easier since it can be riveted from the top-down. The EBC-G cabinet uses screws for fastening, but this design could also be used with rivets.

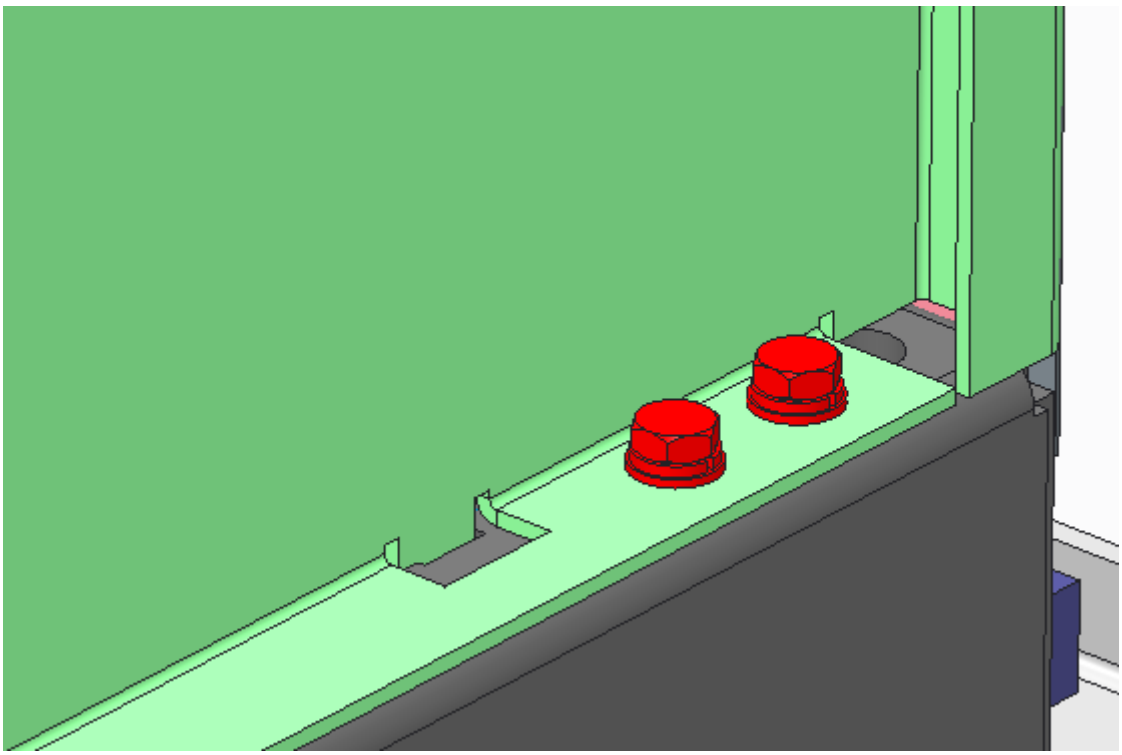

Image 32. EBC-G detail

The current EBC-E battery cabinet is based on a seismic rated design, so it might be possible to reduce the thickness of some frame parts, e.g. the front frame posts, seen in image 33, which are made from 40x20x5 mm steel profile and could be bent from 3 mm thick sheet metal.

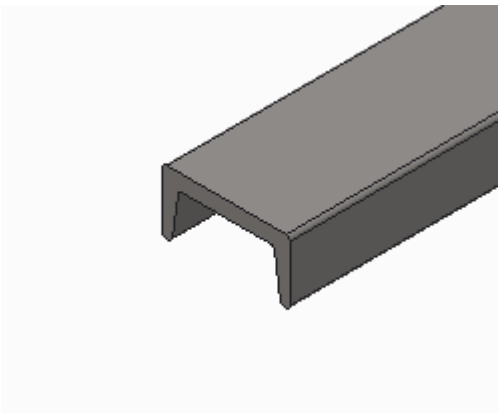

Image 33. EBC-E front post steel profile

8.2 Breaker Assembly

In both of the battery cabinets, the battery breakers are located in the same place, at the front of the cabinet. In the EBC-D cabinet, the power cables from the UPS or another battery cabinet are connected to bus bars, which are attached directly into the battery breaker, as seen in image 34.

Image 34. EBC-D battery cabinet power cables connections

In the EBC-E cabinet, in image 35, the power cable connections are located at the bottom of the cabinet. This means that cables have to be used to connect the power cable connections to the battery breaker. By moving the customer connections to the same place as in the EBC-D cabinet, in the combined battery cabinet, the need for these cables can be eliminated.

Image 35. EBC-E battery cabinet power cable connections

However, because the EBC-E cabinet has extra frame posts at the front, the cabinet would have to be widened in order for the assembly to fit into place. Another option would be to reduce the number of power cable connections from eight to four, so the assembly could be narrowed. This would require that in the case of double cabling, the cable connectors would have to be removed and cables with cable lugs would be placed on top of each other, or on opposite sides of the bus bar. This is how double cabling is currently done in the EBC-E cabinet.

The cable connectors could also be removed altogether and the connections could be made with cable lugs. This design is seen in image 36. This would reduce the cost of the breaker assembly quite considerably, since the cable connectors are quite expensive (à 6 €). However, this would require that Eaton productizes the power cables. Currently the customer is required to supply the cables themselves.

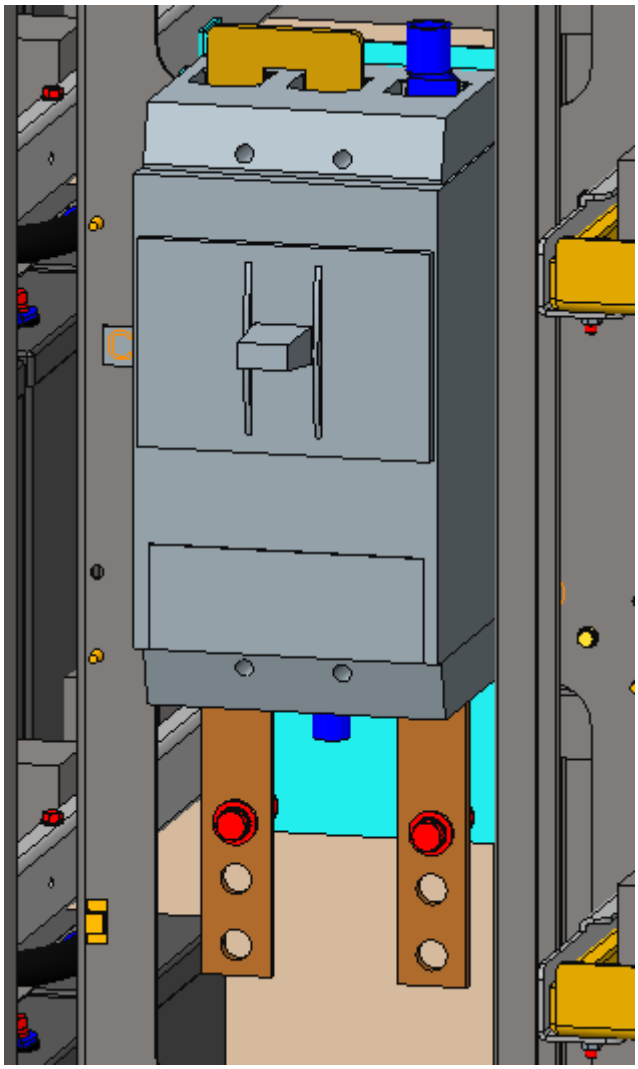

Image 36. Battery breaker assembly design

8.3 Outer Plates

At present all of the outer plates of the EBC-E battery cabinet, including the rear plate, are painted. Because other battery cabinets or UPS devices generally do not have painted rear plates, the painting has also been removed from the rear plate for the

combined battery cabinet. The thickness of the outer plates could also be reduced. Currently the side plates and the doors are made from 1.5 mm thick sheet metal and the rear plate is made from 1.9 mm thick sheet metal. The rear plate should be made from 1.5 mm sheet metal as well. 1 mm thicknesses might also be possible, although the plates might become too weak and deform too easily. The ventilation holes at the top of the battery cabinet should be located on the rear plate rather than the roof, since this will make it possible to achieve IP21 classification without an extra plate on the top of the battery cabinet.

In the combined battery cabinet cable entry holes are located in the top, bottom and the rear plates of the cabinet. Adding them to the side plates is also possible, but aligning them with the cable entry holes in the 93PM UPS would be difficult. In the 93PM UPS device the height of the cable entry holes from the ground is only 105 mm. Since the combined battery cabinet base is designed to be used for lifting the battery cabinet off of the pallet, it will need to be high enough for the forks of the fork lift. This means that the height of the base should be at least 90 – 100 mm, so the 93PM cable entry holes would be partly blocked by the base plate.

The door has been designed without a breaker access, since this design has already been accepted in the current EBC-E battery cabinet, although adding a battery breaker access when the doors are closed would not increase the overall cost of the door assemblies very much. Both of the battery cabinets currently have hexagonal ventilation holes in the doors, which ensures they look similar to the 93PM UPS devices they are commonly sold with, seen in image 37.

Image 37. 93PM UPS door

The use of hexagonal holes means that extra protective shields are required behind the doors in order for the fire enclosure demands to be fulfilled. In the EBC-E cabinet, these shields are painted black and have circular ventilation holes. The ventilation holes and painting have been removed to reduce the cost of the door assembly.

The doors in both battery cabinets also currently have bends to make them more similar to the 93PM and 9395P doors. These bends have been removed to reduce processing steps in the manufacture of the doors. This will reduce the structural integrity of the doors slightly, but since there is no significant load on the doors and they are relatively light, this should not be a problem. The locks on the doors have also been replaced with the same locks that are used with the 93PM UPS since these cost less.

9 Conclusions

The objective of this thesis was to gather data about the cost structures of Eaton's EBC-D and EBC-E battery cabinets. The data was mainly gathered by studying BOM's sent by the subcontractors and by interviewing people involved in the design process of

battery cabinets. Standards were also studied in order to establish which design features are required and which are optional. This data was to be used to identify possible cost savings for the battery cabinets and design a concept for a battery cabinet that would replace the two existing models.

Based on the data that was gathered, approximate costs for various design solutions and features were established. These cost estimations were then used to identify cost saving options when designing the concept for the combined battery cabinet. A number of design solutions were identified which could be used in the combined battery cabinet in order to reduce its costs compared to the current EBC-D and EBC-E designs e.g. modifying the EBC-E battery cabinet frame to be assembled with rivets. Due to time constraints the concept for the combined battery cabinet was not fully completed during this thesis.

Assembly time optimization is an aspect that should be given more consideration in future battery cabinet designs. Currently both battery cabinets have issues with regards to their assembly; the EBC-D cabinet requires holding down during its assembly and the EBC-E cabinet is welded, which requires specialized workforce and the use of jigs. By designing a riveted cabinet where the parts lock into place before they are secured with rivets the assembly times could be reduced. Other aspects, e.g. the possibility to rivet the frame from the outside should also be taken into consideration.

When designing future battery cabinets, the cost of the features included in the designs, e.g. the number of power cable connections, should perhaps be evaluated more carefully and compared to the value that they add to the customer. If the design feature increases the cost of the battery cabinet, but would result in no significant increase in the number of battery cabinets sold, then its inclusion in the design should be carefully considered. Of course other aspects, e.g. serviceability, have to also be taken into consideration.

The use of standardized parts, e.g. for frame posts, in multiple UPS and battery cabinet products is something that should be considered in the future. This would also partly reduce the development time for products since fewer parts would have to be designed for each new product. Cost effective design principles should also be included from the beginning of the development process, since reducing the manufacturing costs for existing products is usually difficult and opportunities for it are limited. This could be

achieved by setting a target price for the battery cabinet when its design is being specified. This can help reduce feature creep, where new features are added into the product, which cause the cost of the product to increase. Incorporating cost effective design principles can, of course, be difficult because the development schedules for new products are tight, especially since new battery cabinets are usually developed alongside UPS devices, which often take precedence over battery cabinets.

References

1 UPS Handbook. 2012. Network material. <http://lit.powerware.com/ll_download_bylitcode.asp?doc_id=18370>. Read September 20th 2017.

2 Dfma. 2016. Network material. <https://image.slidesharecdn.com/dfma-160113163926/95/dfma-11-638.jpg?cb=1454023386>. Read November 9th 2017.

3 Ulrich, Karl T. & Eppinger Steven D. 2012. Product design and development. 5th edition. Singapore: McGraw-Hill Education.

4 Boothroyd, Geoffrey & Dewhurst, Peter & Knight, Winston A. 2011. Product Design for Manufacture and Assembly. 3rd edition. Boca Raton: CRC Press.

5 MASTERYS Battery Cabinets. 2013. Network material. <http://www.socomec.com/files/live/sites/systemsite/files/UPS/PDF_catalogue/pdf_web_GB/dcg_129013_46-47BatteryCabinets.pdf>. Read September 20th 2017.

6 Battery cabinets and accessories. 2016. Network material. <https://library.e.abb.com/public/d45831d885044f37a5c116ee36313f69/004-041605_Battery_cabinets_Flyer_160509a.pdf>. Read September 20th 2017.

7 Galaxy VM back up time cabinet IEC wide A. 2017. Network material. <http://www.apc.com/shop/fi/en/products/galaxy-vm-back-up-time-cabinet-iec-wide-a/p-gvmcbcwea>. Read September 20th 2017.

8 IEC 60950-1. Information technology equipment – Safety – Part 1: General requirements. 2005. Geneva. International Electrotechnical Commission.

9 IEC 62040-1. Uninterruptible power systems (UPS) – Part 1: Safety requirements. 2017. Geneva. International Electrotechnical Commission.

10 IEC 62430. Environmentally conscious design for electrical and electronic products. 2009. Brussels. International Electrotechnical Commission.

11 Colin Hindle. 2017. Polypropylene (PP). Network material. <http://www.bpf.co.uk/plastipedia/polymers/PP.aspx>. Read November 20th 2017.

12 William S. Bisenius. 2012. Ingress Protection: The System of Tests and Meaning of Codes. Network material. <https://www.webcitation.org/6DGYoRMwp?url=http://www.ce-mag.com/archive/06/ARG/bisenius.htm>. Read December 7th 2017.