LPP PUMPS – SALES MANUAL

Flowrox Oy
P.O. Box 338
53101 Lappeenranta
Finland

Phone: +358 (0)201 113 311
Fax: +358 (0)201 113 300
e-mail: info@flowrox.com
internet: www.flowrox.com

LPP-PUMPS – SALES MANUAL

1. GENERAL INFORMATION 5
2. LPP-PUMPS & APPLICATIONS 7
3. PUMP HOSES 32
4. GEAR MOTORS 38
5. AUXILIARIES 39

APPENDICES

1. GENERAL INFORMATION 5
1.1. ADVANTAGES OF FLOWROX PUMPS 6
2. PUMP TYPES & APPLICATIONS 7
2.1. APPLICATIONS 7
2.1.1. CHOOSING THE RIGHT PUMP FOR APPLICATIONS 8
2.2. LPP-D 9
2.2.1. FEATURES 10
2.2.2. PROCESS BENEFITS 10
2.2.3. TECHNICAL DATA 11
2.3. LPP-T 16
2.3.1. FEATURES 17
2.3.2. PROCESS BENEFITS 17
2.3.3. TECHNICAL DATA 18
2.4. LPP-T /D PUMP MODEL NUMBERING 25
2.5. LPP-M 26
2.5.1. NON-ENCLOSED LPP-M PUMPS 26
2.5.1.1. FEATURES 26
2.5.1.2. TECHNICAL DATA 27
2.5.2. LPP-M2/B PUMPS 29
2.5.2.1. FEATURES 29
2.5.2.2. TECHNICAL DATA 30
3. PUMP HOSES 32
3.1. HOSE SELECTION FOR LPP-T/D PUMPS 32
3.2. HOSE SELECTION FOR LPP-M PUMPS 34
3.3. HOSE COMPATIBILITY WITH DIFFERENT MEDIUMS 36
3.4. PUMP HOSE MODEL NUMBERING 37

4. GEAR MOTORS **38**

5. AUXILIARIES **39**

5.1. PULSATION DAMPENERS 39

5.2. REVOLUTION DETECTOR 46

5.3. PRESSURE TRANSMITTER 49

5.4. HOSE LEAKAGE DETECTOR 53

APPENDICES

- **FDA-PROVEMENT**
- **TEKNIKUM BROCHURE**
- **FLOWROX PRODUCT QUESTIONNAIRE**
- **TEKNOS PAINTING STANDARDS**
- **SEW-GEAR MOTOR CATALOGS**
- **INSTALLATION, OPERATION & MAINTENANCE MANUALS**
  - MANUAL FOR LPP-D PUMPS
  - MANUAL FOR LPP-T PUMPS
  - MANUAL FOR LPP-M PUMPS
  - INSTRUCTION MANUAL: FLOWROX LPP-T & LPP-D HOSE PUMPS IN EXPLOSIVE CONDITIONS (ATEX)

1. GENERAL INFORMATION

- Flowrox has over 30 years of experience with more than 100 000 installed products worldwide.
- High quality valves & pumps for various applications
- Worldwide sales network, covering more than 50 countries.
- Flowrox (former Larox Flowsys Oy) was the first pinch valve manufacturer in the world to get awarded the ISO9001:2000 Quality Certificate in 1997.
- Flowrox focuses on Mining & Minerals and Energy & Environment industries but have also a solid expertise in various other fields.
- Flowrox's pumps are divided into LPP – and PC-Pumps.
  (LPP=Larox Peristaltic pumps, PC=Progressive cavity)
- This certification covers **ALL** operations including product design, research and development, manufacturing, process application, sales and marketing, customer service, customer's application support and after-sales services.
- Headquarters are located in Lappeenranta; Finland Flowrox Group has subsidiaries in Linthicum (Maryland USA), Sydney (Australia) and in Johannesburg (South Africa).

1.1 ADVANTAGES OF FLOWROX LPP PUMPS

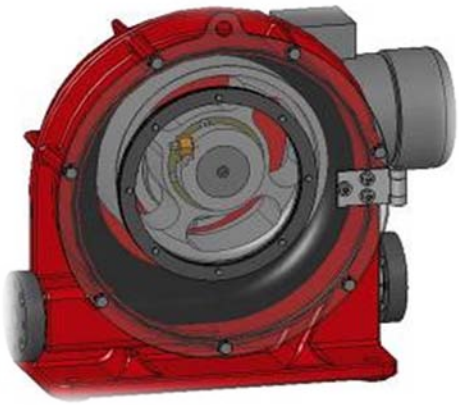

- ✓ Substantial savings through improved process performance and uptime
- ✓ Long service lifetime & hose life
- ✓ Energy efficiency
- ✓ Low maintenance need , low maintenance costs → Lower ownership costs
- ✓ Unique operating principle & rolling design in LPP-T & LPP-D pumps
  - ❖ 360 – degree operating cycle
  - ❖ **ONLY ONE COMBRESSION / REVOLUTION**
    - ➢ Hoses last 5 times longer than a shoe design pumps
- ✓ LPP-Pumps can run constantly at high speed, without causing damage or heating the pump's construction.
- ✓ Ideal for pumping diverse mediums and dosing a wide range of abrasive, corrosive, viscous or crystallizing media.
- ✓ The innovative Flowrox peristaltic pumps for transfer and dosing
- ✓ Pumps require only a small fraction of glycerine to reduce friction

2. PUMP TYPES & APPLICATIONS

2.1 APPLICATIONS

TYPICAL APPLICATIONS FOR FLOWROX LPP - PUMPS

Application/Media	Industry
Paints, Acids, Resins	Chemical Process Industries
Metal Conentrates & Flocculants	Mining & Metal Industry
Slurries, Sludge, Mud, Additivies	Water & Effluent Treatment
GCC, PCC, Talc, Kaolin, TiO_2	Pigments & Fillers
Lime, Waste, Slurries	Energy Production
Paper Coatings, Glues, Additivies	Pulp & Paper Industry
Filtering & Filtration aids, Diatomaceous earth, Starch	Food & Beverage Industry
Mortars, Plasters, Bentonite, Cement	Constructon Industry
Drilling mud, Waste sludge	Oil & Offshore

- LPP-T peristaltic pumps for transferring
- LPP-D peristaltic pumps for dosing
- LPP-M peristaltic pumps for metering

2.2.1 CHOOSING THE RIGHT PUMP FOR APPLICATIONS

The conditions of the applications need to be considered before choosing the right pump type or model.

- **Suction conditions**
- **Specific gravity**
- **Temperature of media / in application**
- **Particle size of the media**
- **Viscosity of the media**
- **Required minimum/maximum flow rate**
- **Continuous operation /yes or no?**

Flowrox's questionnaire *can be found in appendices*

<u>Defining pump rotation speed</u>

$$\frac{\text{Required flow}\,\frac{m^3}{h}\,\text{x}\,1000}{60\,\text{x}\,\frac{\text{flow}}{\text{revolution}}\left(\frac{l}{min}\right)}$$

Example / LPP-T65

$$\frac{15\,\frac{m^3}{h}\text{x}\,1000}{60\,\text{x}5{,}4\left(\frac{l}{min}\right)} = \sim 47\ \text{rpm}$$

2.2 LPP-D PUMPS

- The operating principle of the pump is based on *peristaltic effect*, where a single bearing mounted roller presses against the hose only once per a 360° operating cycle.
- The roller is mounted on a crankshaft to enable the eccentric movement of the roller.
- As the cylindrical rotor rotates along the hose, the process medium is pushed forward in the hose bore.
- At the same time, the hose behind the compression point reverts to its original shape. This creates a suction effect at the pump inlet port.
- As a result the hose bore is filled with the process medium. Backward flow is not possible because of the tightly set compression on the hose.

2.2.1 FEATURES

- Only the hose is in contact with the medium
- No gland water or packing
- Full vacuum capability
- No backward flow
- Positive displacement
- Compact size
- 360 – degree operating cycle
- **Only one compression / revolution** (LPP-D & LPP-T)
- Low lubrication need
- In-line pipe connection & reliable hose connection → Simple installation

2.2.2 PROCESS BENEFITS

- No wear and corrosion
- Dry run capability
- Self-priming
- No mixing or shearing of the medium
- High pressure capability
- Extended hose life
- No overheating at continuous maximum flow
- Accurate flow for dosing & metering

2.2.3 LPP-D PUMP TECHNICAL DATA

Technical Data	LPP-D10	LPP-D15	LPP-D20	LPP-D25
Maximum Flow	0,408 m3/h	0,6 m3/h	1,1 m3/h	2,0 m3/h
Maximum Pressure	7,5 bar	7,5 bar	7,5 bar	7,5 bar
Maximum Pressure: High Pressure	16 bar	16 bar	16 bar	16 bar
Flow / Revolution	0,0617 L	0,10 L	0,18 L	0,30 L
Hose Connection	10 mm	15 mm	20 mm	25 mm
Hose Bore	10 mm	15 mm	20mm	25 mm
Lubricant Volume	0,4 L	0,4 L	0,4 L	0,4 L
Weight	~47kg	~47kg	~47kg	~60kg
Motor Power	0,55-0,1,1 kW	0,55-0,1,1 kW	0,55-1,1 kW	0,75-1,5 kW

Available pump heads: STD, Acid proof, Atex, High pressure

Size range: LPP-D10, LPP-D15, LPP-D20, LPP-D25

Standard drive unit: Parallel shaft geared motor

(The pump can also be equipped with a helical bevel geared motor)

Auxiliaries:

- Revolution detector,
- Hose leakage detector
- Pulsation Dampener

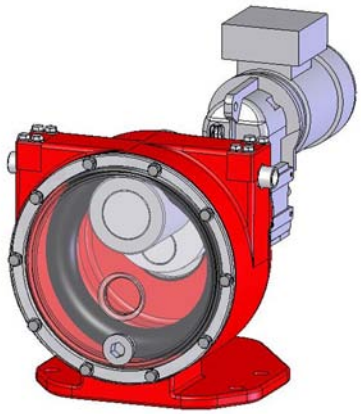

More information under the "Auxiliaries" - paragraph

Materials of Construction

Housing: High strength cast aluminium

Crank Shaft: High strength carbon steel

Rotor: Polyurethane or black-nitrated steel

Front Cover: Aluminium casting

Pipeline Connection: Polyethylene/nylon/stainless steel

FLOWROX

Proven Performance

LPP-D10 HOSE PUMP

TECHNICAL DATA SHEET

FLOW WITH MAXIMUM PRESSURE

LPP-D10 CAPACITY CHART, CONTINUOUS DUTY, UP TO 95°C

(24 h/day/7 days per week)

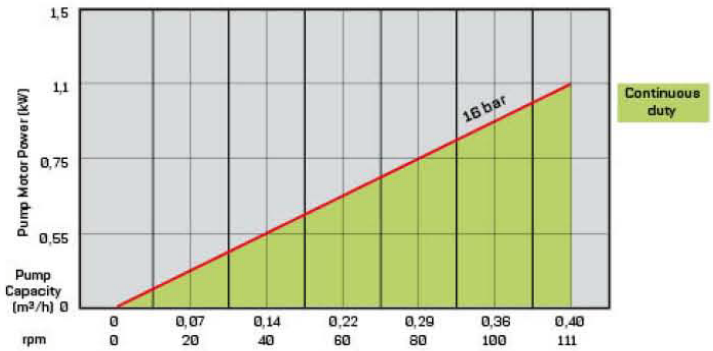

Technical Data

- Maximum flow: 0,4m^3/h
- Maximum pressure: 7,5 bar
- Flow/revolution: 0,06lpm
- Hose connection: 10mm
- Hose bore: 10 mm
- Lubricant volume: 0,4 l
- Weight: ~47 kg
- Motor power: 0,75-1 hp

Construction materials

- Housing: High-strength cast aluminium
- Crank shaft: Carbon steel
- Rotor: Polyacetal
- Hose materials (*colour code*):
  EPDM (*violet*)
  NR (*light blue*)
  NBR (*yellow*)
  NBRF (*white*)

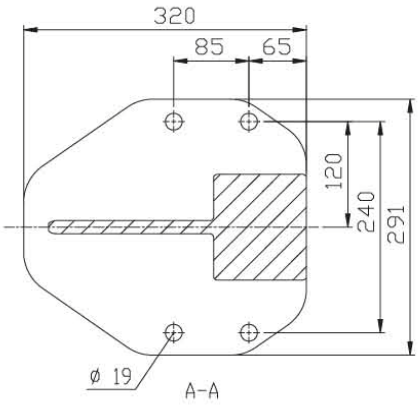

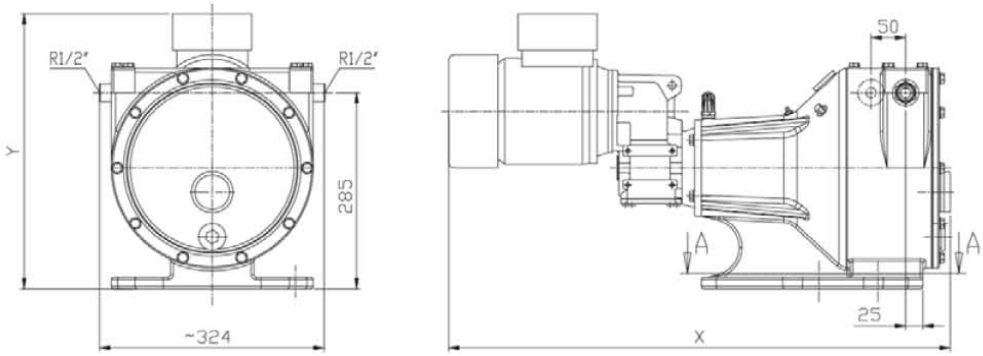

Dimensions (X, Y) vary according to the drive size. Please consult Flowrox Oy for the exact drive sizing to your application.

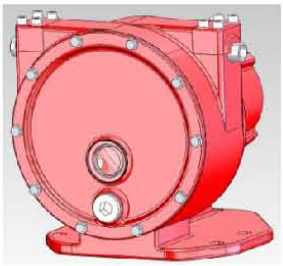

FLOWROX

Proven Performance

LPP-D15 HOSE PUMP

TECHNICAL DATA SHEET

FLOW WITH MAXIMUM PRESSURE

LPP-D15 CAPACITY CHART, CONTINUOUS DUTY, UP TO 95°C

(24 h/day/7 days per week)

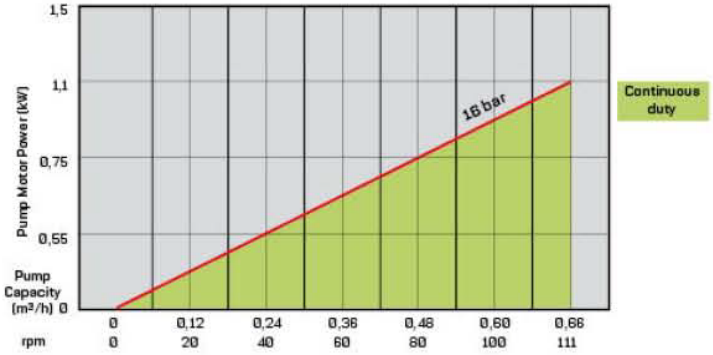

Technical Data

- Maximum flow: Ø.66 m^3/h
- Maximum pressure: 7.5 bar
- Flow/revolution: Ø,1 l
- Hose connection: R½"
- Hose bore: 15 mm
- Lubricant volume: Ø,4 l
- Weight: ~47 kg
- Motor power: Ø,55-Ø.75 kW

Construction materials

- Housing: High-strength cast aluminium
- Crank shaft: Carbon steel
- Rotor: Polyacetal
- Hose materials (*colour code*):
  EPDM (*violet*)
  NR (*light blue*)
  NBR (*yellow*)
  NBRF (*white*)

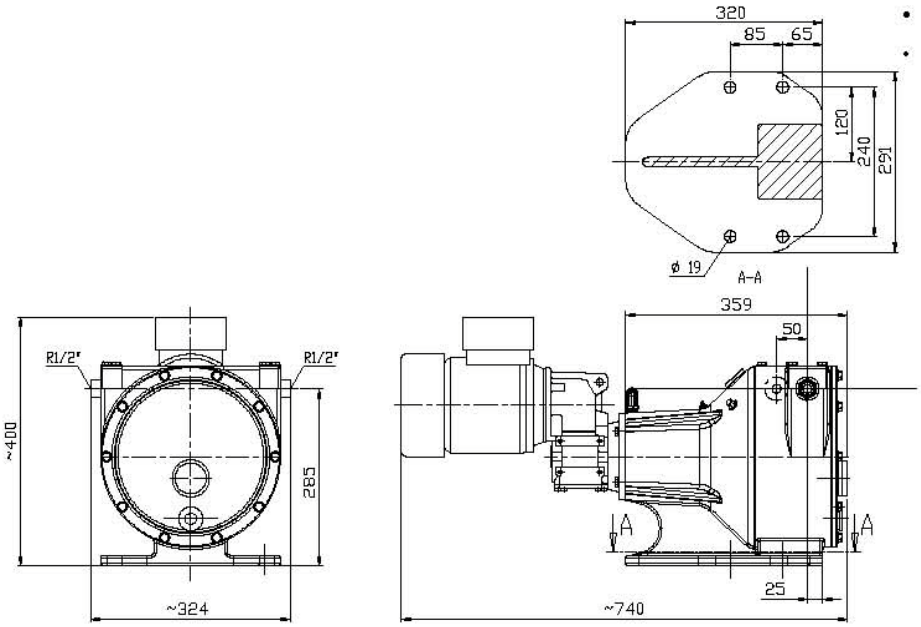

Dimensions (X, Y) vary according to the drive size. Please consult Flowrox Oy for the exact drive sizing to your application.

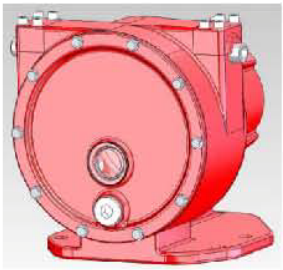

FLOWROX

Proven Performance

LPP-D20 HOSE PUMP

TECHNICAL DATA SHEET

FLOW WITH MAXIMUM PRESSURE

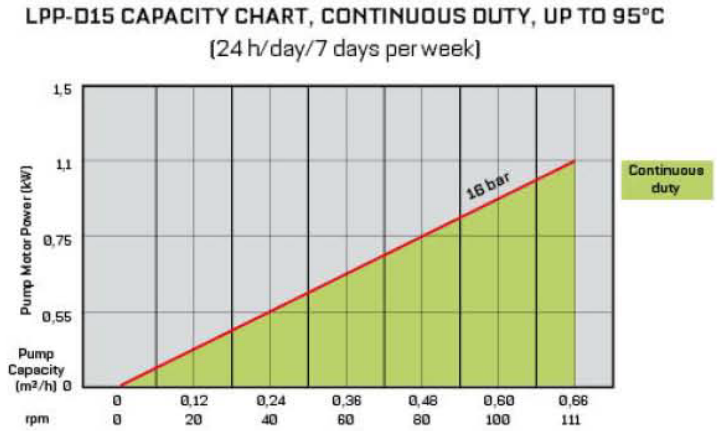

Technical Data

- Maximum flow: 1.2 m^3/h
- Maximum pressure: 16 bar
- Flow/revolution: Ø,18 l
- Hose connection: R "
- Hose bore: 20 mm
- Lubricant volume: Ø,4 l
- Weight: ~47 kg
- Motor power: Ø,55-1,1 kW

Construction materials

- Housing: High-strength cast aluminium
- Crank shaft: Carbon steel
- Rotor: Polyacetal
- Hose materials (*colour code*):
  EPDM (*violet*)
  NR (*light blue*)
  NBR (*yellow*)
  NBRF (*white*)

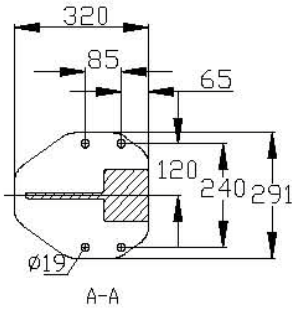

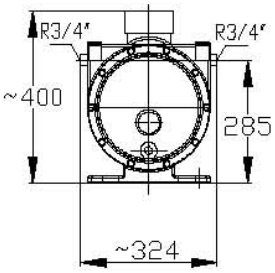

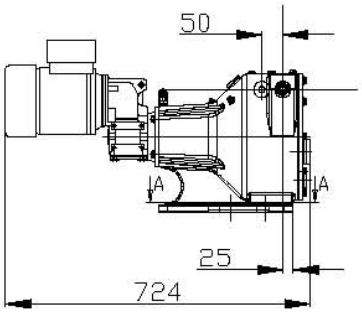

Dimensions (X, Y) vary according to the drive size. Please consult Flowrox Oy for the exact drive sizing to your application.

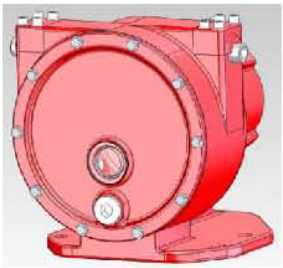

FLOWROX

Proven Performance

LPP-D25 HOSE PUMP

TECHNICAL DATA SHEET

FLOW WITH MAXIMUM PRESSURE

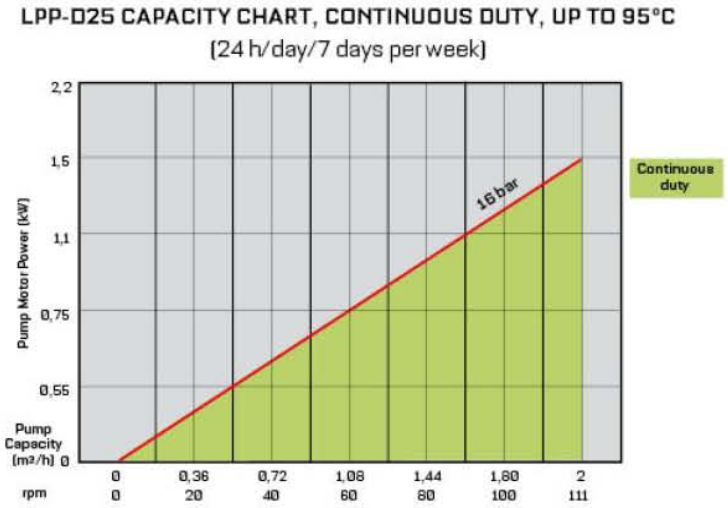

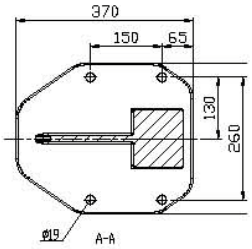

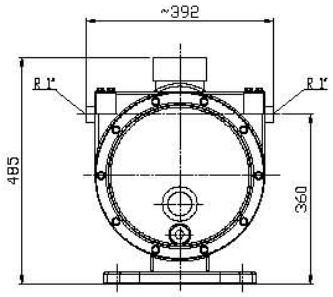

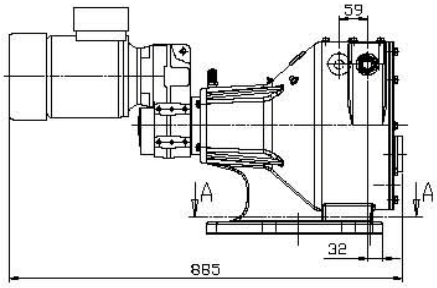

Dimensions (X, Y) vary according to the drive size. Please consult Flowrox Oy for the exact drive sizing to your application.

Technical Data

- Maximum flow: 2.0m^3/h
- Maximum pressure: 7.5 bar
- Flow/revolution: 0,3l
- Hose connection: R1"
- Hose bore: 25 mm
- Lubricant volume: 0,4 l
- Weight: ~60 kg
- Motor power: 0.75-1.1 kW

Construction materials

- Housing: High-strength cast aluminium
- Crank shaft: Carbon steel
- Rotor: Polyacetal
- Hose materials (*colour code*):
  EPDM (*violet*)
  NR (*light blue*)
  NBR (*yellow*)
  NBRF (*white*)
  CSM (green)

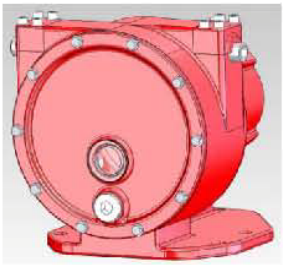

2.3 LPP-T PUMPS

- The operating principle of the LPP-T pump is based on the peristaltic effect. As the cylindrical rotor rotates along the hose, the process medium gets pushed forward trough the hose.

- At the same time, the hose behind the compression point reverts to its original circular shape creating a suction effect at the pump inlet port.

- As a result, the hose bore gets filled with the medium. No backward flow can occur as the hose is squeezed tight by the roller.

2.3.1 FEATURES

- Only the hose is in contact with the medium
- No gland water or packing
- Full vacuum capability
- No backward flow
- 360 degree operating cycle
- In-line pipe connection
- Patented hose connection
- ***Patented hose compression adjustment mechanism***

2.3.2 PROCESS BENEFITS

- No wear and corrosion
- Dry run capability
- Self-priming
- Exact flow per revolution
- Extended hose life
- No overheating
- Lower operating costs
- Easy maintenance

Size range: LPP-T25, LPP-T32, LPP-T40, LPP-T50, LPP-T65, LPP-T80

Standard drive unit: Helical bevel geared motor

(The pump can also be equipped with a parallel shaft geared motor)

Auxiliaries:

- Revolution detector
- Pressure transmitter
- Hose leakage detector

Materials of Construction

Housing: Nodular cast iron
Rotor: Cast iron with plastic coating
Front Cover: High strength carbon steel
Shaft: High strength carbon steel
Pipeline connection: Stainless steel, nylon, titanium

2.3.3 LPP-T PUMPS TECHNICAL DATA

Technical Data	LPP-T25	LPP-T32	LPP-T40	LPP-T50	LPP-T65	LPP-T80
Maximum Flow	2,2 m3/h	3,9 m3/h	7,5 m3/h	11,5 m3/h	20 m3/h	40 m3/h
Maximum Pressure	10 bar	10 bar	10 bar	10 bar	10 bar	7,5 bar
Flow / Revolution	0,28 L	0,65 L	1,25 L	2,75 L	5,4 L	11,6 L (±1,25%)
Hose Bore & Flange Connection	25 mm	32 mm	40 mm	50 mm	65 mm	80mm
Lubricant Volume	0,8 L	0,8 L	1 L	2,5 L	3 L	8 L
Weight	~130kg	~300kg	~360kg	~650kg	~960kg	~2500kg
Motor Power	0,37-1,5 kW	0,75-4 kW	1,1-4 kW	1,5 - 9,2 kW	3-11 kW	9,2-18kW
Adjustment Torque: 1. New Hose (x) Nm 2. Readjustment (x) Nm	None	None	1. 30 Nm 2. 25 Nm	1. 50 Nm 2. 45 Nm	1. 60 Nm 2. 50 Nm	1. 120 Nm 2. 110 Nm
Bolts & Tightening Torques (TT)	M16 x 70 TT = 200 Nm	M24 x 70 TT = 660 Nm	M24 x 70 TT = 660 Nm	M24 x 70 TT = 660 Nm	M24 x 70 TT = 660 Nm	M24 x 70 TT = 660 Nm
Max. Operating Speed (rpm)	131	100	100	70	65	55
Minimum Free Distances Around the Pump & Flatness Requirements for the Pump Foundation F= Front, B=Behind, L= Left, R=Right FL = Flatness	F= 1000 mm B = 150 mm L = 500 mm R = 500 mm FL = 1 mm	F= 1000 mm B = 150 mm L = 500 mm R = 500 mm FL = 1 mm	F= 1000 mm B = 150 mm L = 500 mm R = 500 mm FL = 1 mm	F= 1500 mm B = 150 mm L = 500 mm R = 500 mm FL = 2 mm	F= 1500 mm B = 150 mm L = 500 mm R = 500 mm FL = 2 mm	F= 1500 mm B = 150 mm L = 500 mm R = 500 mm FL = 2 mm

FLOWROX

Proven Performance

LPP-T25 HOSE PUMP

TECHNICAL DATA SHEET

FLOW WITH MAXIMUM PRESSURE

LPP-T25 CAPACITY CHART, CONTINUOUS DUTY, UP TO 95°C

(24 h/day/7 days per week)

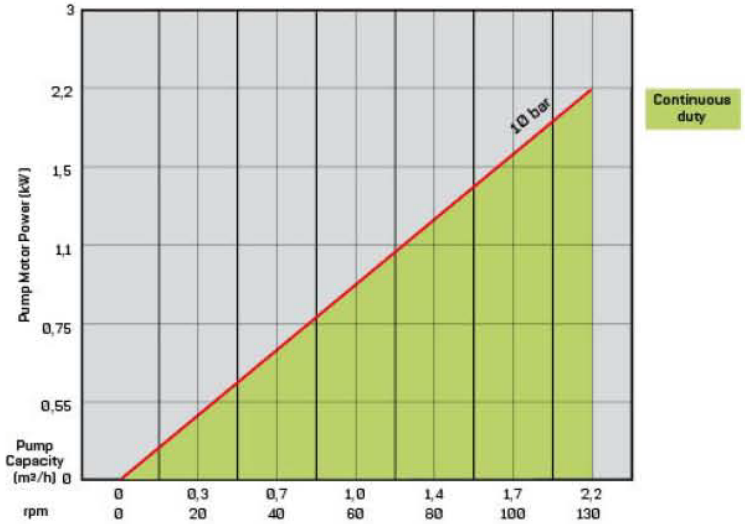

Technical Data

- Maximum flow: 2.2m^3/h
- Maximum pressure: 10 bar
- Flow/revolution: 0,28l
- Hose bore: 25 mm
- Lubricant volume: 0,8 l
- Weight: ~130 kg
- Motor power: 0.75-1.5 kW

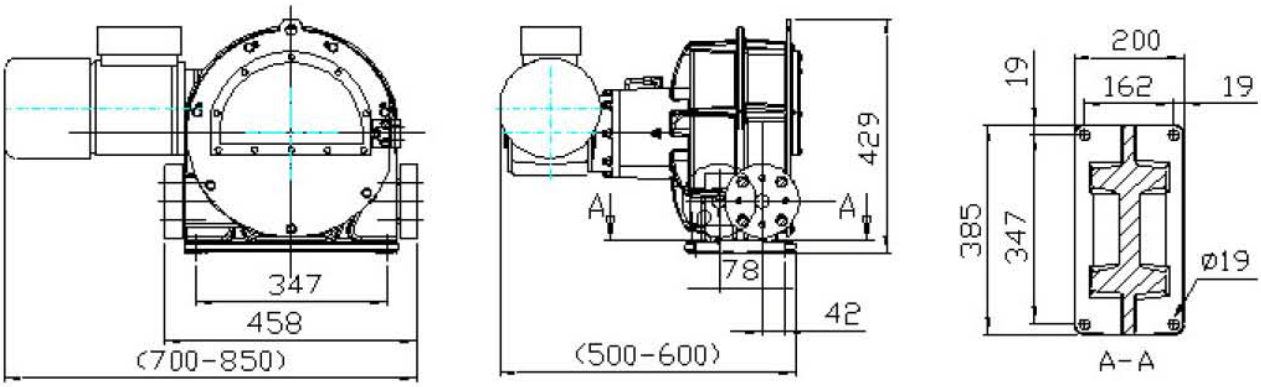

Dimensions (X, Y) vary according to the drive size.
Please consult Flowrox Oy for the exact drive sizing to your application.

FLOWROX

Proven Performance

LPP-T32 HOSE PUMP

TECHNICAL DATA SHEET

FLOW WITH MAXIMUM PRESSURE

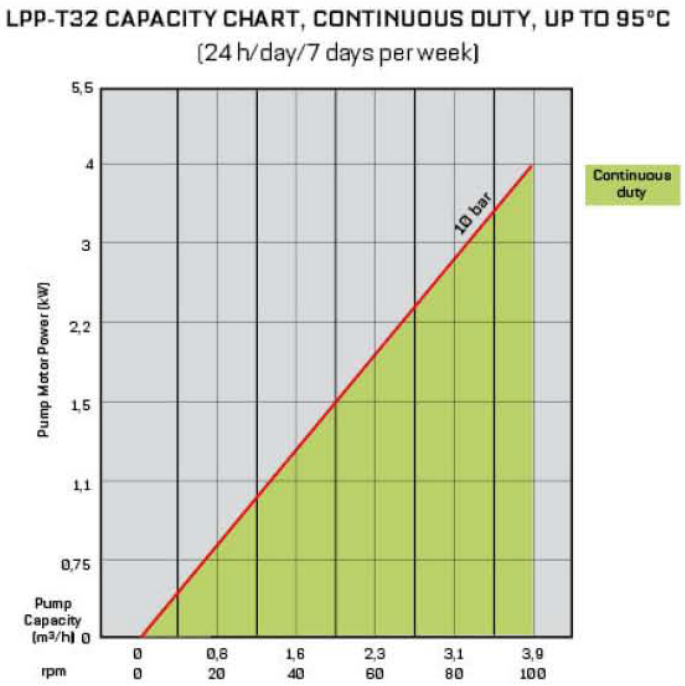

Technical Data

- Maximum flow: 3.9m^3/h
- Maximum pressure: 10 bar
- Flow/revolution: 0,65l
- Hose bore: 32 mm
- Lubricant volume: 0,8 l
- Weight: ~300 kg
- Motor power: 0.75-4 kW

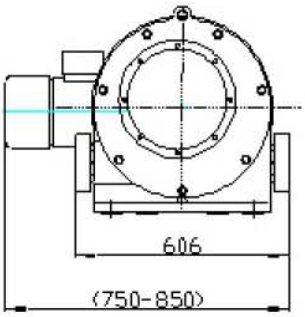

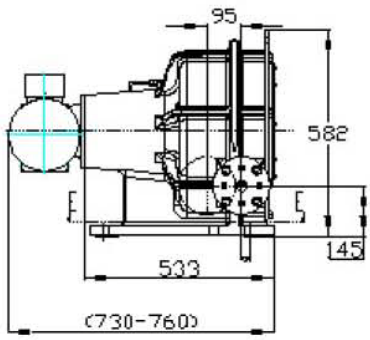

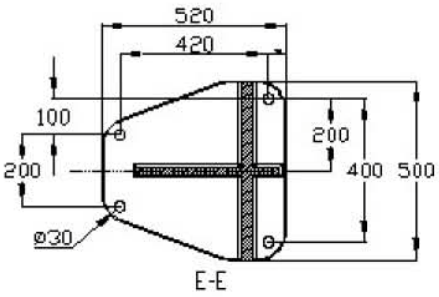

Dimensions (X, Y) vary according to the drive size.
Please consult Flowrox Oy for the exact drive sizing to your application.

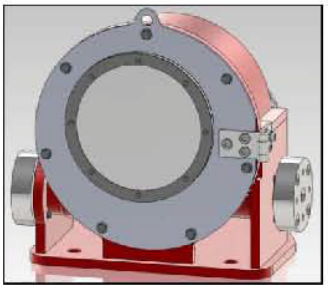

FLOWROX

Proven Performance

LPP-T40 HOSE PUMP

TECHNICAL DATA SHEET

FLOW WITH MAXIMUM PRESSURE

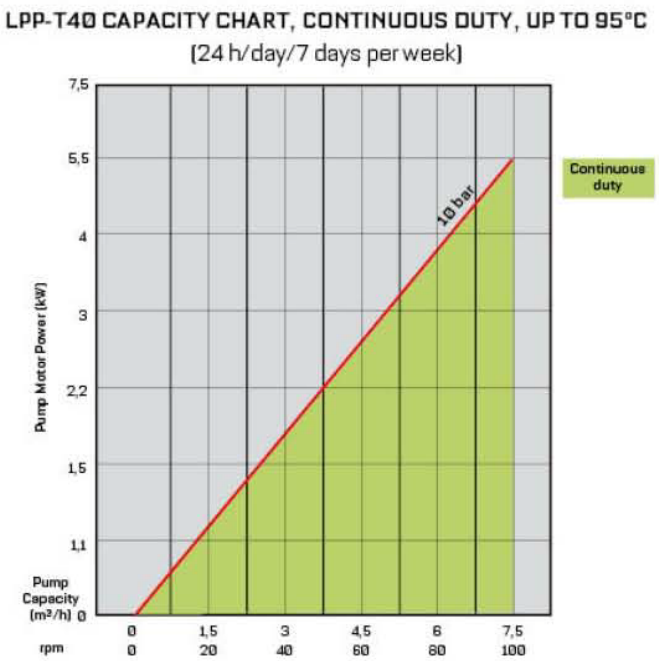

Technical Data

- Maximum flow: 7.5m^3/h
- Maximum pressure: 10 bar
- Flow/revolution: 1.25 l
- Hose bore: 40 mm
- Lubricant volume: 1 l
- Weight: ~360 kg
- Motor power: 1.1-4 kW

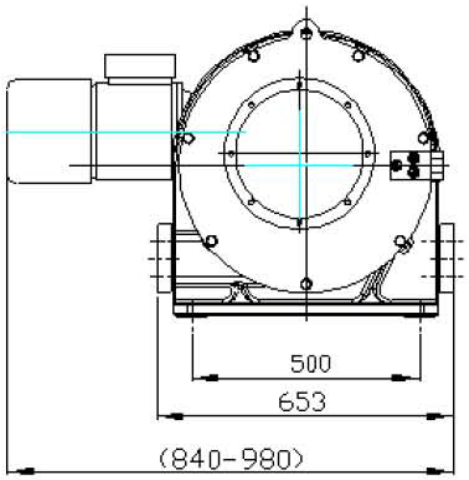

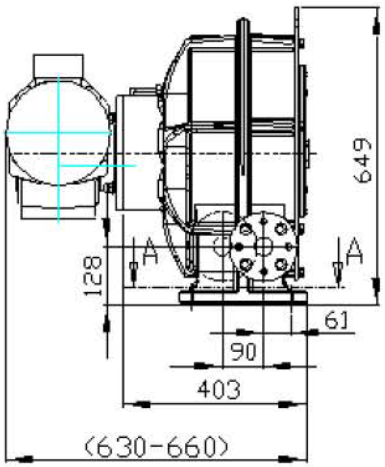

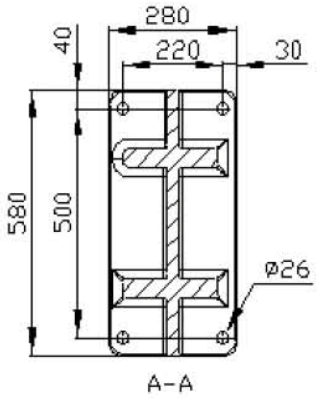

Dimensions (X, Y) vary according to the drive size. Please consult Flowrox Oy for the exact drive sizing to your application.

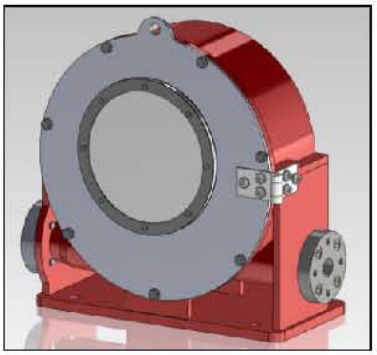

FLOWROX

Proven Performance

LPP-T50 HOSE PUMP

TECHNICAL DATA SHEET

FLOW WITH MAXIMUM PRESSURE

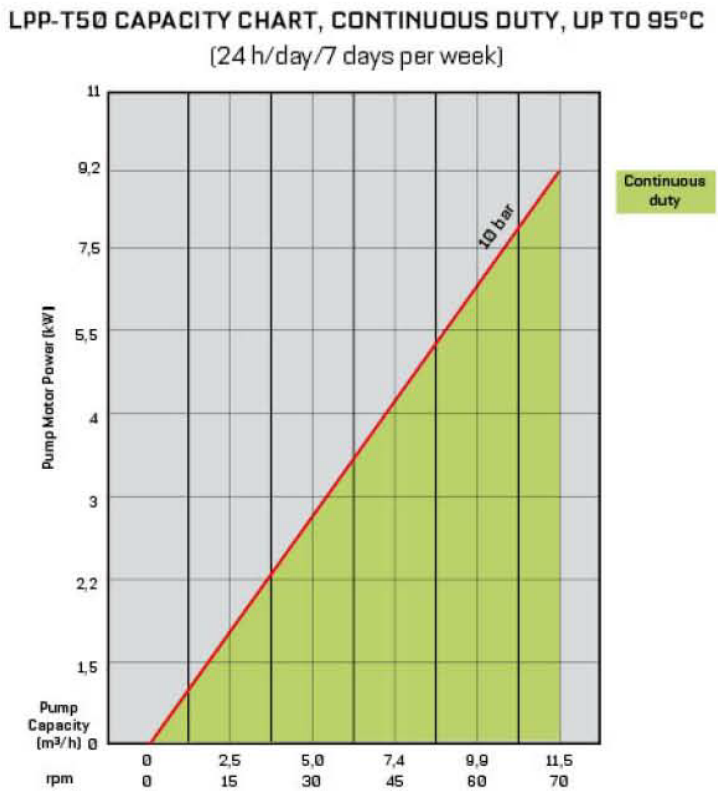

Technical Data

- Maximum flow: 11.5m^3/h
- Maximum pressure: 10 bar
- Flow/revolution: 2.75 l
- Hose bore: 50 mm
- Lubricant volume: 2.5 l
- Weight: ~650 kg
- Motor power: 1.5-9.2 kW

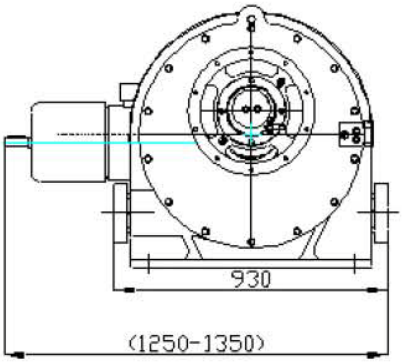

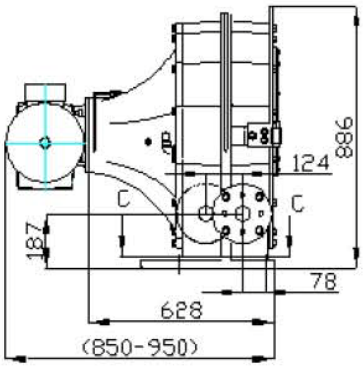

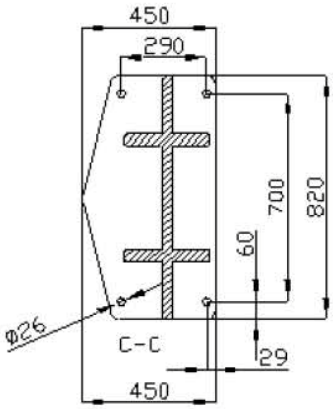

Dimensions (X, Y) vary according to the drive size. Please consult Flowrox Oy for the exact drive sizing to your application.

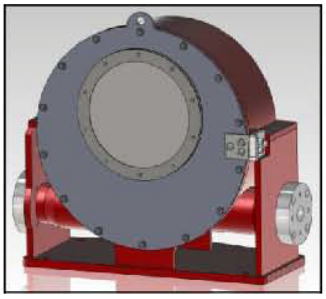

FLOWROX

Proven Performance

LPP-T65 HOSE PUMP

TECHNICAL DATA SHEET

FLOW WITH MAXIMUM PRESSURE

LPP-T65 CAPACITY CHART, CONTINUOUS DUTY, UP TO 95°C

(24 h/day/7 days per week)

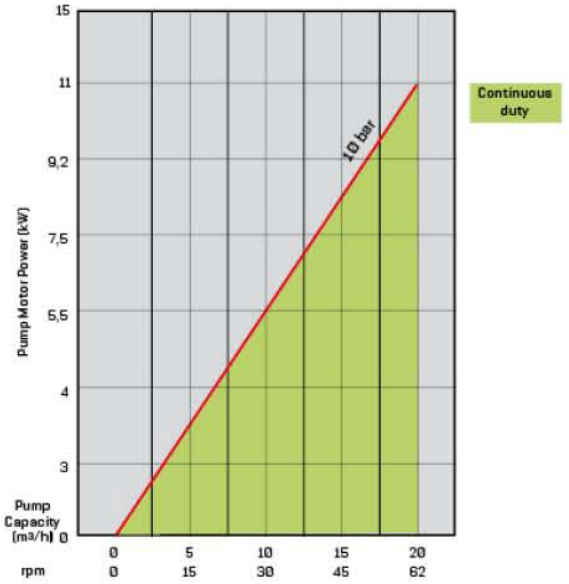

Technical Data

- Maximum flow: 20m^3/h
- Maximum pressure: 10 bar
- Flow/revolution: 5.4 l
- Hose bore: 65 mm
- Lubricant volume: 3 l
- Weight: ~960 kg
- Motor power: 3-11 kW

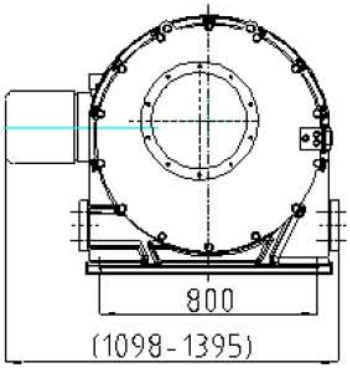

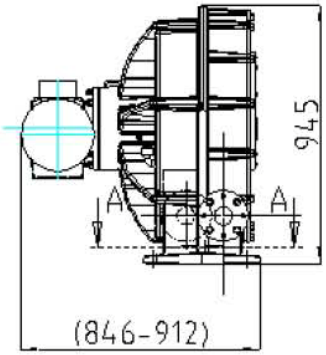

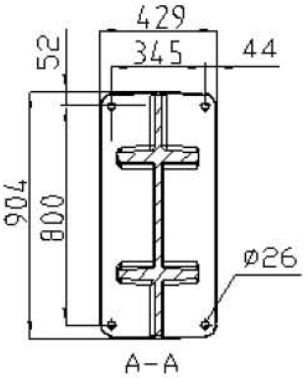

Dimensions (X, Y) vary according to the drive size. Please consult Flowrox Oy for the exact drive sizing to your application.

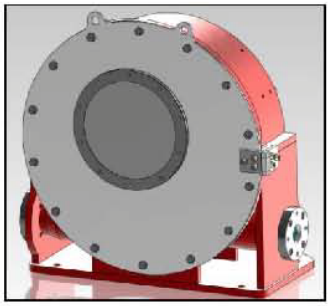

FLOWROX

Proven Performance

LPP-T80 HOSE PUMP

TECHNICAL DATA SHEET

FLOW WITH MAXIMUM PRESSURE

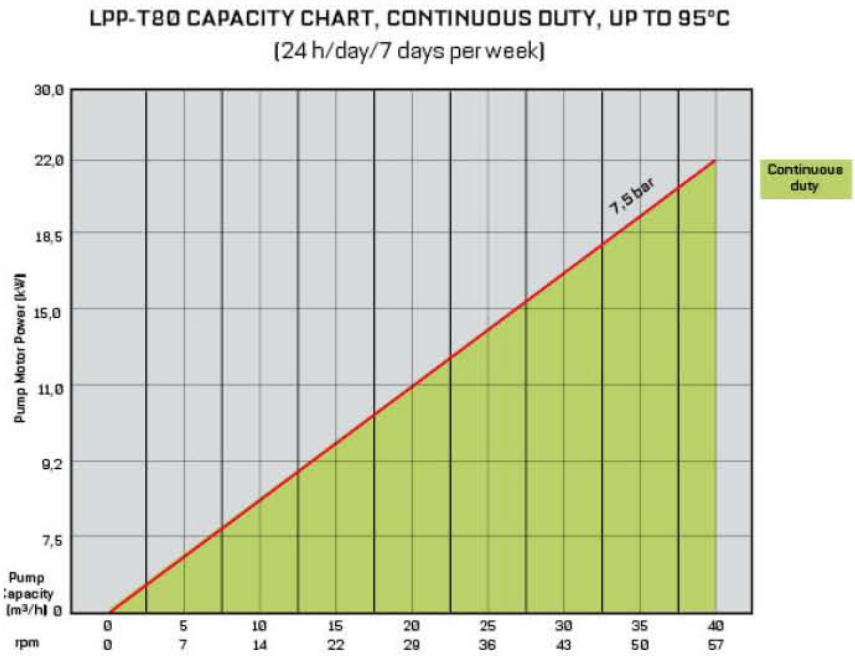

Technical Data

- Maximum flow: 40m^3/h
- Maximum pressure: 7.5 bar
- Flow/revolution: 11.6 l
- Hose bore: 80 mm
- Lubricant volume: 8 l
- Weight: ~2500kg
- Motor power: 9.2-18 kW

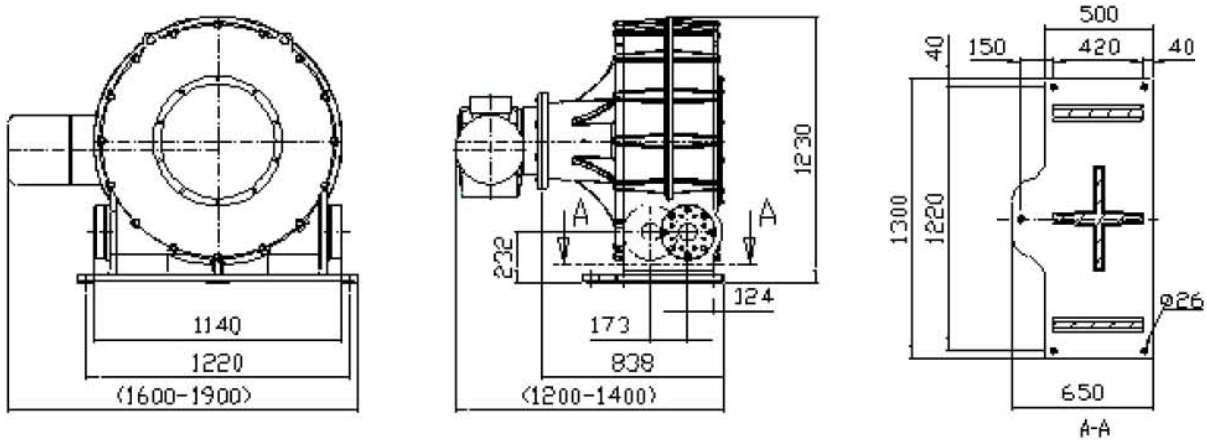

Dimensions (X, Y) vary according to the drive size. Please consult Flowrox Oy for the exact drive sizing to your application.

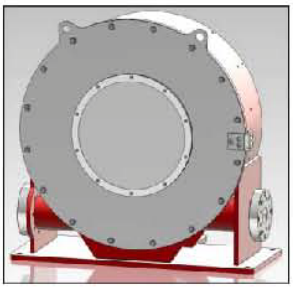

2.4 LPP T/D PUMP MODEL NUMBERING

Size (DN)	Drive	Pressure Class	Connecton	Body Material	Drive Controls	Auxiliaries		Example
10 mm 15 mm 20 mm 25 mm	**GM** = Geared Motor **GU** = Gear Unit **BS** = Bare Shaft Pump	7,5 bar 16 bar (High pressure)	1/4 " = R1/4" 1/2" = R1/2" 3/4" = R3/4" 1" = R1" 9 = Other	3 = AL (Aluminum)	**II** = Integrated Inverter (IP66) **I** = Inverter (IP20) **N** = None	**R** = Revolution Detector **D** = Hose Leak Detector **F** = Forced Cooling	LPP-D	
Size (DN)	Drive	Pressure Class	Connecton	Body Material	Drive Controls	Auxiliaries		Example
25 mm 32 mm 40 mm 50 mm 65 mm 80 mm	**GM** = Geared Motor **GU** = Gear Unit **BS** = Bare Shaft Pump	7,5 bar 10 bar (LPP-T80)	1 = - 2 = Flanged DIN PN 10 3 = Flanged DIN PN 16 6 = Flanged ANSI 150 8 = Flanged P.S 9 = Other	0 = FE (Steel)	**II** = Integrated Inverter (IP66) **I** = Inverter (IP20) **N** = None **WC** = Control Unit	**R** = Revolution Detector **D** = Hose Leak Detector **F** = Forced Cooling **T** = Pressure Transmitter with Display **H** = Connector Hoses **K** = Connector Flange for Pressure Transmitter	LPP-T	*LPP - T40 *Geared Motor *10 bar *Flanges DIN PN 16 *Inverter *Revolution Detector **Type Marking:** LPP-T40GM 10-3-0-I-R

2.5 LPP-M PUMPS

LPP-M has a U-turn design with two compressions per revolution.

2.5.1 NON-ENCLOSED LPP-M PUMPS

2.5.1.1 Features

Features
Only the tube element is in contact with the medium
Self-Priming, 90% of Full Vacuum
Accurate Metering Throughout the Whole Adjustment Range
Patented Tube Failure Detection (TFD) System
Will Never Vapour Lock or Lose Prime
Fully Occluded, No Backward Flow
No Valves - No Clogging
Dry Run Cabability
Exact Flow / Revolution Irrespective of the Pipeline Pressure
Optional Remote Start / Stop Feature
Optional Reversible Rotation & Variable Speed Motor
Optional Flow Vertification (FVS)

2.5.1.2 Technical data

[illegible]

[illegible]

Dimensions (with integrated inverter):

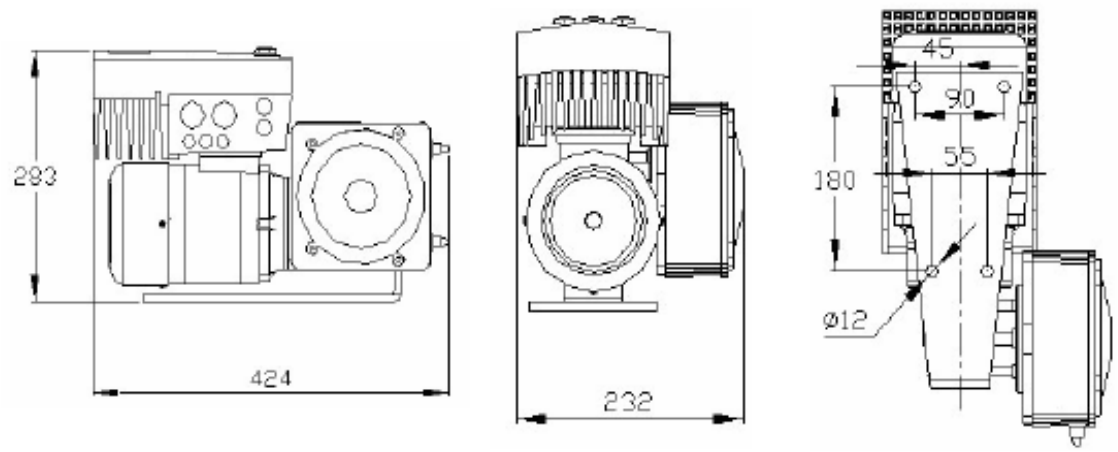

Model number matrix:

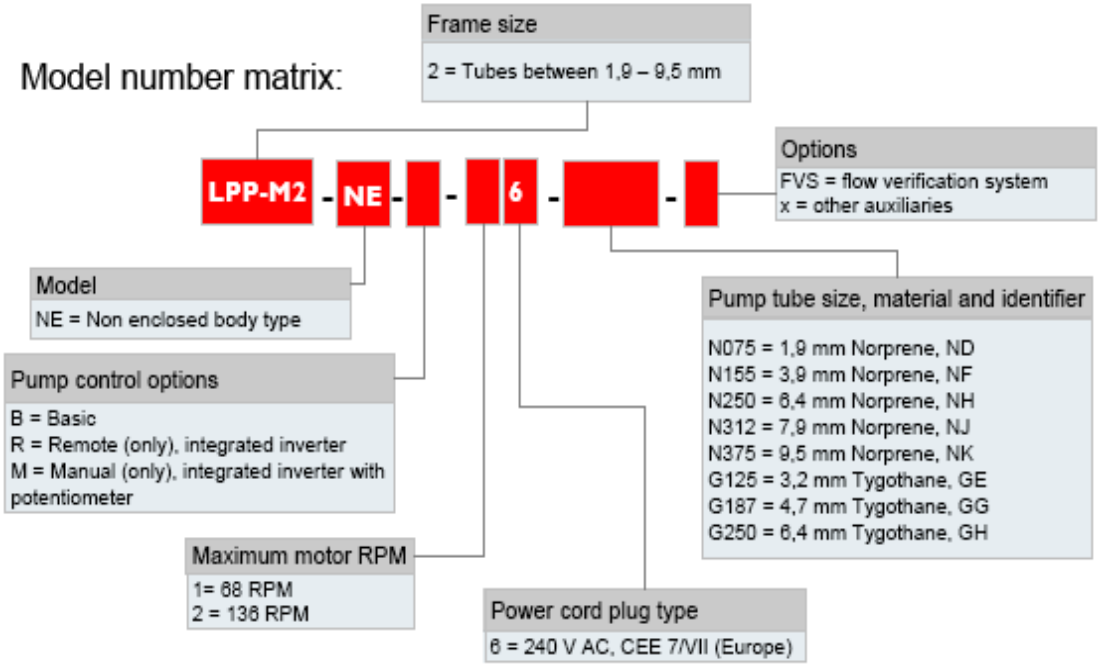

Maximum flow rate and pressure capacities:

		136 RPM MODEL	
Tube number	Tubing material	Bar	Litres per hour
N075	Norprene	8,6	7,8
N155	Norprene	8,6	30,0
N250	Norprene	8,6	66,0
N312	Norprene	8,6	96,0
N375	Norprene	8,6	126,0
G125	Tygothane	4,5	17,4
G187	Tygothane	4,5	38,4
G250	Tygothane	4,5	94,2

2.5.2 LPP-M2-S & B PUMPS

2.5.2.1 Features

2.5.2.2 Technical data

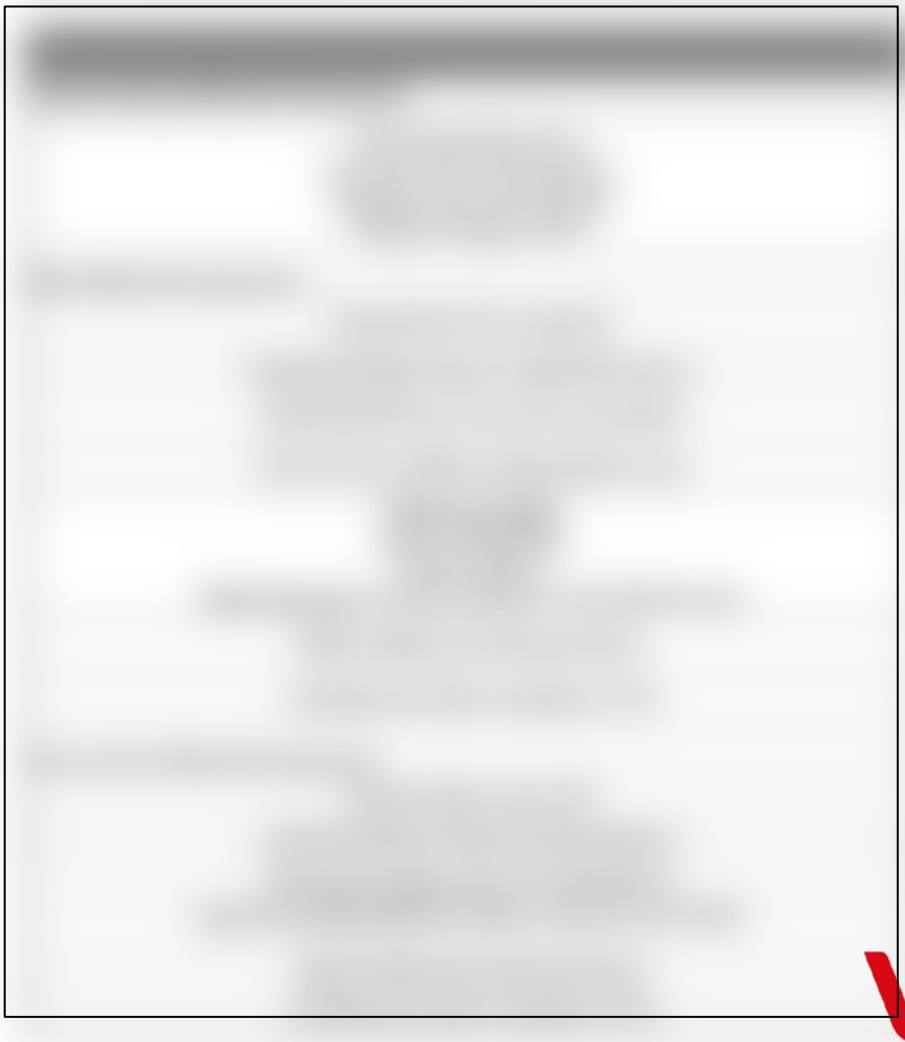

LPP-M2-S/B Pump main measurements

Dimensions:

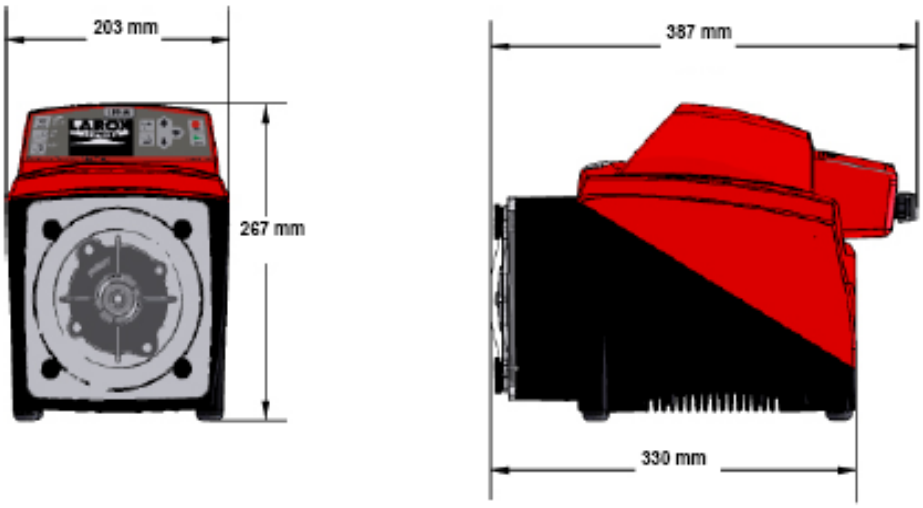

Model number matrix:

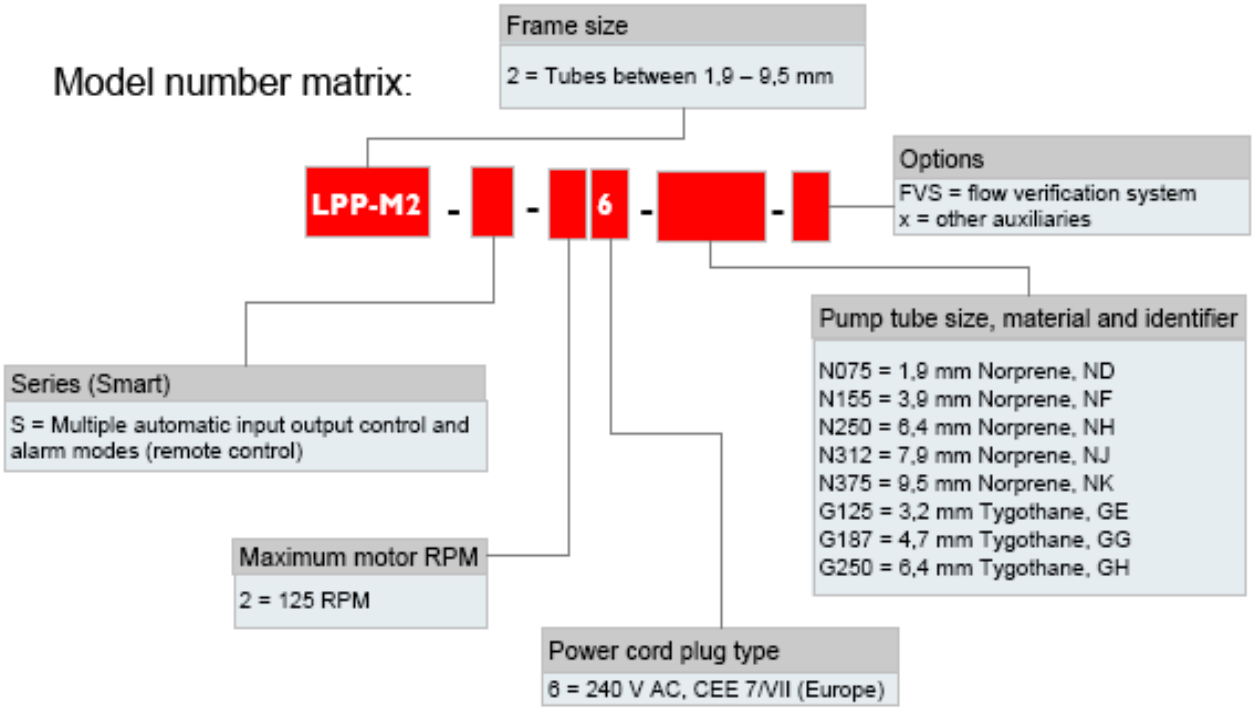

3. PUMP HOSES

LPP-T/D hose includes three sets of layers:

- The inner layer which is the ***only part of the hose*** in contact with the medium is resistant to abrasive wear and chemicals
- The reinforcement layers give the hose its pressure retaining capability
- The outer layer protects the hose and facilitates it to return to its original shape after compression creating a suction effect

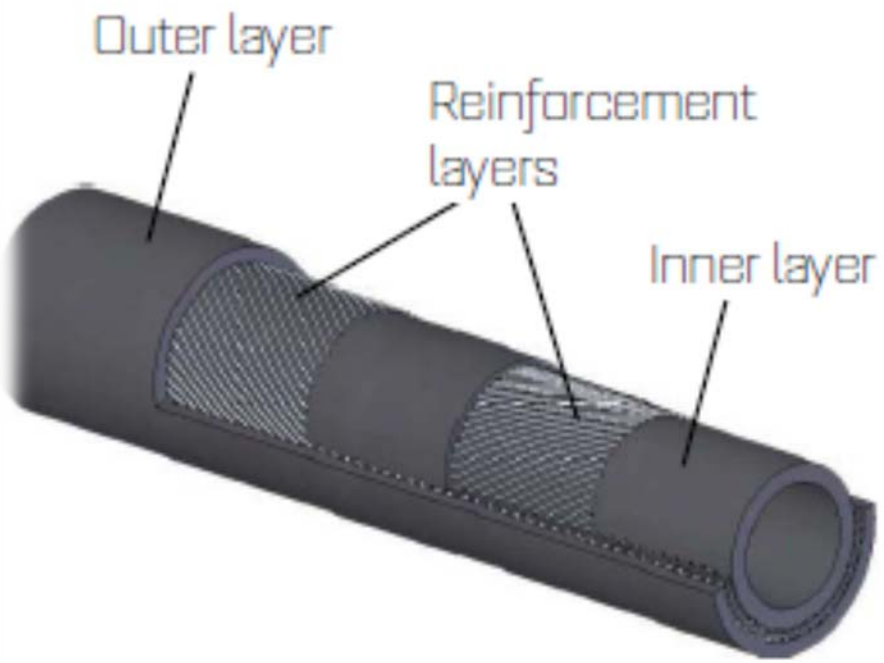

Flowrox LPP-T pumps are equipped with in-line pipe connections; a patented and reliable hose flange and adjustment mechanism that senses hose wear when compression is readjusted.

3.1 HOSE SELECTION FOR LPP-T/D PUMPS

*Colour codes **only** with the LPP-D pump hoses*

EPDM

- Ethylene propylene
- Medium: Chemicals
- Colour code: violet

NBR

- Nitrile rubber
- Medium: Oil and fat
- Colour code: yellow

NR

- Natural rubber
- Medium: Extremely abrasive
- Colour code: light blue

NBRF

- Nitrile rubber
- Medium: fatty foodstuffs
- Colour code: white

3.2 HOSE SELECTION FOR LPP-M PUMPS

Norprene®

- Excellent alkali resistance and is compatible with numerous oxidizing agents such as hydrogen peroxide, sodium hypochlorite and ozone.

- Tubing fully complies with FDA, 3A Sanitary Standards, and NSF Standards, which are applicable to many food contact applications.

- Tubing provides long service life time

  (When exposed to heat, abrasion, and pressure.)

- Tubing exhibits excellent resistance to ozone and UV light, with little or no signs of deterioration in laboratory testing equivalent to 10 years of outdoor exposure.

- Medium: Chemicals

- Pump tube size and identifier:

N075=0.075” (1,9 mm), ND

N155=0.155” (3,9 mm), NF

N220=0.220” (5,6 mm), NH

N312=0.312” (7,9 mm), NJ

N375=0.375” (9,5 mm), NK

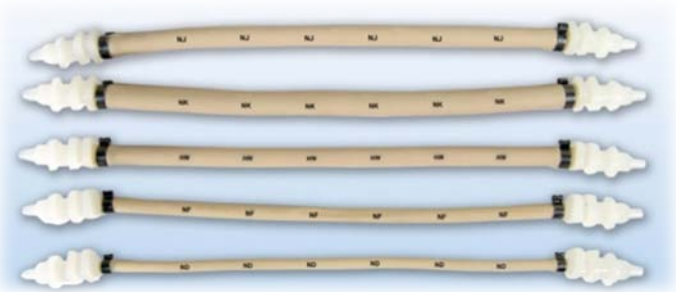

- Easy assembly adapter fittings: PVDF

Tygothane®

•Made of a tough, ester-based polyurethane, Tygothane® tubing's clarity, high tear strength and excellent abrasion resistance makes it ideal for many applications, including fuel and lubricant lines and abrasive product transfer.

• Offers exceptional resistance to oils, greases, fuels and many chemicals.

• Able to withstand rugged daily use and this tubing resists weathering.

• Meets FDA criteria for food and beverage use.

(FDA –provement in the auxiliaries)

• Medium: Oils and fats

• Pump tube size and identifier:

G125=0.125" (3,2 mm), GE

G187=0.187" (4,7 mm), GG

G250=0.250" (6,4 mm), GH

• Easy assembly adapter fittings: PVDF

3.3 HOSE COMPATIBILITY WITH DIFFERENT MEDIUMS

1 = Good 2= Little Effect 3 = Not Recommended

Medium	EPDM			NR			NBR			NBRF			CSM		
	23°C	50°C	80°C	23°C	50°C	80°C	23°C	50°C	80°C	23°C	50°C	80°C	23°C	50°C	80°C
Calcium carbonate	1			1			1			1			1		
Calcium chlorate	1			1			2			2			1		
Calcium chloride	1			1			1			1			1		
Calcium hyrdoxide	1			1			1			1			1		
Copper chloride	1			1			1			1			1		
Copper sulphate	1			1			2			2			1		
Crude oil	3			3			1			2			3		
Diesel oil	3			3			3			3			2-3		
Ferric chloride 65 °C	1			1			1			1			1		
Ferric oxide	1			1			1			1			1		
Ferrous chloride	1			1			1			1			1		
Magnesium hydroxide	1			1			1			1			1		
Seawater	1			1			1			1			1		
Sodium hypochloride 12%	1			3			3			3			2		
Titanium dioxide 30%	1			1			2			2			1		
Zinc chloride	1			1			1			1			1		
Zinc sulphate	1			1			1			1			1		
Sulphuric acid, Conc %															
10 %	1	1	1	1	1	1	1	2	3	2	2	3	1	1	1
20 %	1	1	1	1	1	1	1	2	3	2	2	3	1	1	1
25 %	1	1	1	1	1	2	2	3	3	2	3	3	1	1	1
50 %	1	1	1	1	2	2	3	3	3	3	3	3	1	1	1
60 %	2	3	3	2	2	3	3	3	3	3	3	3	1	1	2-3
75 %	2	3	3	3	3	3	3	3	3	3	3	3	2	2-3	3
96 %	3	3	3	3	3	3	3	3	3	3	3	3	3	3	3

3.4 PUMP HOSE MODEL NUMBERING

For LPP-D Pumps

Hose Material	Pressure Class (PN)	Hose Inner Diameter	Weight (kg)	Example	Temperature Range
EPDM = Ethylene Propylene	7,5 bar 16 bar (High pressure)	10mm 15mm 20 mm 25 mm	10 mm / ~1kg 15mm / ~1kg	* LPP-D25 Pump * Nitrile * 7,5 bar * Hose Diameter 25 **Type Marking:** LPP-D25-NBR7,5	-10°C - +95 °C
NR = Natural Rubber			20mm / ~1kg		-10°C - +95 °C
NBR = Nitrile					-15°C - +75 °C
NBRF = Nitrile (FDA)			25mm / ~1,5 kg		-10°C - +95 °C
CSM = Chloro-Sylphone polyethylene					-10°C - +95 °C

For LPP-T Pumps

Hose Material	Pressure Class (PN)	Hose Inner Diameter	Weight (kg)	Example	Temperature Range
EPDM = Ethylene Propylene	10 Bar	15 mm 32 mm 40 mm 50 mm 65 mm 80 mm	15mm / ~2kg 32mm / ~3,5kg 40mm / ~5 kg	* LPP-T65 Pump * Nitrile * 10 bar * Hose Diameter 65 **Type Marking:** LPP-T65-NBR10	-10°C - +95 °C
NR = Natural Rubber					-10°C - +95 °C
NBR = Nitrile					-15°C - +75 °C
NBRF = Nitrile (FDA)			50mm / ~10 kg 65mm / ~14 kg 80mm / ~29 kg		-10°C - +95 °C
CSM = Chloro-Sylphone polyethylene					-10°C - +95 °C

4. GEAR MOTORS

Flowrox is using two manufacturers' gear motor models

- SEW – Gear motors (Default)
- Nord – Gear motors (Optional)

The gear motors that Flowrox uses are categorized by their electric motor power & gear motor type.

Flowrox uses two different SEW gear motor types:

- K-Series / Helical bevel gear motors
- F-Series / Parallel shaft helical gear motors

Electric motor powers:

- 0,55 kW – 22 kW
- 55 kW
- 75 kW
- 90 kW

SEW-Eurodrive-Helical-Bevel-Gear motors

All the necessary information about SEW & Nord gear motors are in the appendices section.

5. AUXILIARIES

5.1 Pulsation dampener

- For the Flowrox's LPP T/D-pumps
- To eliminate pressure peaks in the piping systems
- Pipe vibration preventation
- To reduce the load on the pump itself
- Manufacturers: *Blacoh*

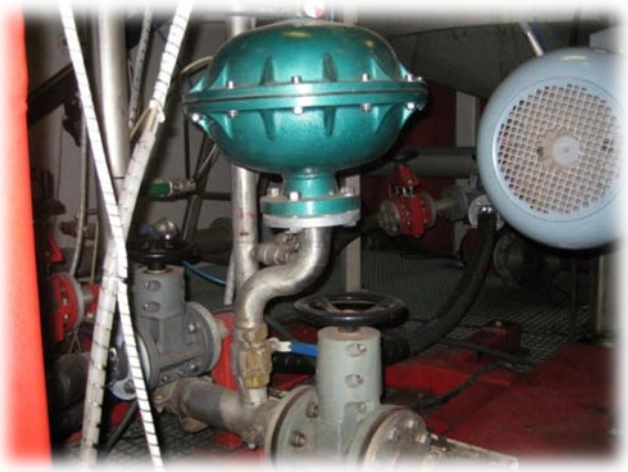

Pulsation dampener models by Blacoh:

For LPP-D10-D20 pumps:

Blacoh 1,39 L Sentry I (10bar)

Type: C311N – ¾ " NPTF

For LPP-D25 & T32 pumps:

Blacoh 6,1 L Sentry I (10bar)

Type: CT101NF – DIN DN50 PN16 Flange

For LPP-T40-T65 pumps:

Blacoh 18,2L Sentry IV (10bar)

Type: CT4000B – DIN DN65 PN16 Flange

For LPP-T80 pumps:

Blacoh 37,9 L Sentry V(16bar)

Type: CT5040 – DIN DN80 PN16 Flange

SENTRY PULSATION DAMPENERS

SENTRY
PULSATION DAMPENERS

DON'T PUMP WITHOUT US

BLACOH
FLUID CONTROL

601 Columbia Ave, Bldg. D, Riverside, CA 92507 • USA
Tel: (800) 603-7867 or (951) 342-3100 • Fax: (951) 342-3101
E-mail: sales@blacoh.com • Website: www.blacoh.com

SENTRY PULSATION DAMPENERS

BENEFITS & FEATURES

Positive Displacement (PD) pumps create pulsation and hydraulic shock due to the reciprocating nature of their stroking action, potentially damaging the entire pumping system. Blacoh's SENTRY® Pulsation Dampeners remove virtually all hydraulic shock, enhancing all-around performance and reliability of fluid handling equipment in industrial and chemical transfer applications.

SENTRY BENEFITS:

- Produces a near steady fluid flow up to 99%* pulsation and vibration free.
- Protects pipes, valves, fittings, meters, and in-line instrumentation from destructive pulsations, vibrations, surges, cavitation, thermal expansion, & water hammer
- Creates steady and continuous flow when dosing, blending or proportioning additives
- Insures accuracy, longevity, and repeatability of in-line meters
- Enables uniform application of material in spraying and coating systems
- Reduces product agitation, foaming, splashing and degradation of product
- Provides liquid energy storage for emergency valve closure and equipment shutdown
- Reduces overall energy cost with continuous linear flow, rather than start/ stop turbulent flow
- Operates as a reservoir for make-up fluid

SENTRY FEATURES:

- Sizes available for all positive displacement pumps with discharge sizes from 1/8" (3.18mm) to 6" (152.4mm)
- Simple, reliable design and quick installation
- Easy in-line maintenance
- Pressure ranges up to 4000 PSI (276 BAR) available from stock
- Temperature ranges from -60°F to +400°F (-51°C to +205°C) available from stock
- Custom models available up to 100 gallons (378L) and 25,000 PSI (1724 BAR)
- Bodies available in a full range of chemically resistant materials
- Bladders available for even the most corrosive application

Let SENTRY Stand Guard Over Your System.
Increase productivity, safety, reliability and efficiency.
Decrease maintenance and operating costs.

PROCESSES

- **TRANSFER**
- **METERING**
- **FILTERING**
- **SPRAYING**
- **PRINTING**
- **COATING**
- **DOSING**
- **INJECTING**
- **FILLING**
- **MIXING**

INDUSTRIES SERVED

Chemical Process

Water Treatment

Food & Beverage

Pulp, Paper & Textile

Paint & Coating

Biotech/ Pharmaceutical

Gas, Oil, & Petrochemical

Consumer Products

PRINCIPLES OF OPERATION

SENTRY operates on the principle that volume is inversely proportional to pressure. Compressed air or gas is introduced into the air chamber of the SENTRY Pulsation Dampener to a specified pressure. The gas is entrapped by the elastomeric bladder, which prevents contact between the process fluid and compressed gas. (Without the bladder, the gas would dissolve into the fluid and cause product contamination). During pump discharge, fluid enters the wetted chamber of the SENTRY Pulsation Dampener, displacing the bladder, compressing the gas and absorbing the shock. During pump shift, liquid pressure decreases, the dampener gas expands, pushing fluid back into the process line, eliminating up to 99% of system shock and pulsation.

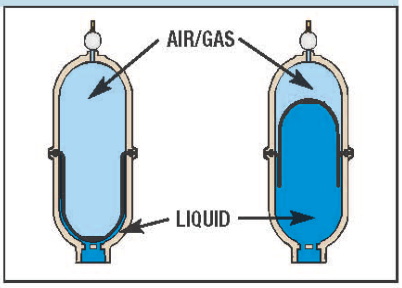

TYPICAL INSTALLATIONS

AODD, METERING, PERISTALTIC, & PISTON PUMPS

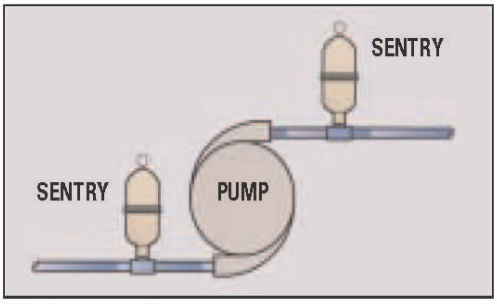

PUMP STARTUP & SHUTDOWN

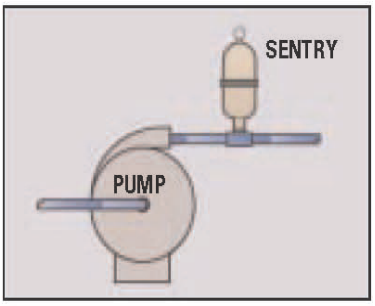

QUICK CLOSING VALVES

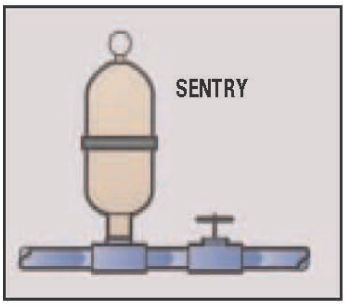

*Requires proper sizing.

SENTRY TECHNICAL SPECIFICATIONS

SENTRY PLASTIC

Pressure Rating*:	Up to 150 PSI (10 BAR)	Temperature Range**:	-20°F to +250°F (-29°C to + 121°C)
Capacities:	4 cubic inches to 5 gallons (.066 – 18L)	Inlet Ports:	Threaded: FNPT and BSP Flanged: ANSI and DIN
Shell Materials:	Polypropylene Conductive Polypropylene PVC and CPVC PVDF Conductive Acetal		

SENTRY METAL

Pressure Rating*:	Up to 4000 PSI (276 BAR)	Temperature Range**:	-60°F to + 400° F (-51°C to +204°C)
Capacities:	4 cubic inches to 100 gallons (.066 - 378L)	Inlet Ports:	Threaded: FNPT and BSP Flanged: ANSI and DIN
Shell Materials:	Aluminum Carbon Steel 316L Stainless Steel Alloy 20 Hastelloy C Epoxy, PVDF and PTFE coated steel		

SENTRY SANITARY

Pressure Rating*:	Up to 1000 PSI (69 BAR)	Temperature Range**:	-20° F to +350° F (-28°C to +176° C)
Capacities:	4 cubic inches to 10 gallons (.066 - 37L)	Inlet Ports:	Tri-clamp type sanitary fitting
Shell Materials:	30 RA Polished 316L Stainless Steel Bead Blasted 316L Stainless Steel		

SENTRY PTFE

Pressure Rating*:	Up to 100 PSI (6 BAR)	Temperature Range**:	+40°F to + 220°F (+4°C to +104°C)
Capacities	4 to 370 cubic inches (.066 - 6L)	Inlet Ports:	Threaded: FNPT and BSP Flanged: ANSI and DIN Metric Flare Type
Shell Materials:	Machined PTFE		

SENTRY XP HIGH PRESSURE

Pressure Rating*:	Up to 4000 PSI (276 BAR)	Temperature Range**:	-60°F to +225°F (-51°C to +107°C)
Capacities	8 to 24 cubic inches (.13 - .39L)	Inlet Ports:	Threaded: FNPT Flanged: ANSI
Shell Materials:	316L Stainless Steel		

SENTRY TEF-GUARD XP II

Pressure Rating*:	Up to 2000 PSI (137 BAR)	Temperature Range**:	+40°F to + 220°F (+4°C to +104°C)
Capacities	12 cubic inches (.20L)	Inlet Ports:	Threaded: FNPT Flanged: ANSI
Shell Materials:	316L Stainless Steel Carbon Steel Alloy 20 Hastelloy C		

BLADDER OPTIONS

COMPOUND	TEMPERATURE LIMITS	APPLICATIONS
Neoprene	0°F to +200°F (-18°C to +93°C)	Good abrasion resistance and flex; use with moderate chemicals.
Buna	+10°F to +180°F (+12°C to +82°C)	Good flex life; use with petroleum, solvents and oil-based fluids.
EPDM	-60°F to +280°F (-51°C to +137°C)	Use in extreme cold; good chemical resistance with ketones, caustics.
Hypalon	-20°F to +275°F (-29°C to +135°C)	Excellent abrasion resistance; good in aggressive acid applications.
Viton	-10°F to +350°F (-22°C to +176°C)	Use in hot & aggressive fluids; good with aromatics, solvents, acids & oils.
Atlas	0°F to +400°F (-18°C to +204°C)	High temperature, petroleum based chemicals, strong acids and bases.
FDA Silicone	-20°F to +300°F (-29°C to +149°C)	FDA-approved food grade material; for use in food and pharmaceutical processing.
FDA Buna	+10°F to +180°F (-12°C to +82°C)	FDA-approved food grade. Similar characteristics of Silicone.
FDA Fluorel	-10°F to +350°F (-22°C to +176°C)	Fluorel is a fluoroelastomer comparable to Viton.
PTFE	+40°F to +220°F (+4°C to +104°C)	Bellows design; excellent flex life; use with highly aggressive fluids.

* Maximum PSI rated for ambient temperatures.

** Reflects entire temperature range for all available materials. Consult Blacoh on specific materials.

AIR CONTROL OPTIONS

CHARGEABLE

The chargeable model has a Schrader type charging valve that allows for a predetermined pressure charge to be applied and held in the dampener. No permanent source of compressed gas is required to be attached to the unit. The chargeable models are used primarily with metering, piston and peristaltic pumps for pulsation dampening. Chargeable models are also used for surge suppression to prevent water hammer from quick closing valves, for make-up fluid to prevent pump cycling and for suppression of pump start up or shut down pressure spikes.

INLET STABILIZER

The patented inlet stabilizer air control (U.S. Patent No. 6,089,837) consists of a compound pressure gauge, a pressure/vacuum tight ball valve and a venturi valve. When compressed air is passed through the venturi valve at high speed, a low pressure area is created which is used to evacuate the air from the stabilizer, creating a vacuum internally. Conversely, when the flow of air through the venturi valve is diverted into the stabilizer, a pressure charge is obtained. When pump inlet conditions are optimized, pump efficiency is maximized.

AUTOMATIC

An automatic poppet type valve located in the non-wetted section of the dampener allows for an increase in compressed air pressure to balance an increase in system liquid pressure. As liquid system pressure increases, the bladder is pushed further up into the dampener until it contacts the internal automatic valve. This contact opens the valve and allows an increase of compressed air to enter the dampener. When the air pressure inside the dampener equals the system liquid pressure, the dampener is in balance and pulsations are minimized. If a change in pressure occurs this process is repeated. Automatic units are designed for use on air operated diaphragm pumps in systems with a varying discharge pressure.

ADJUSTABLE

The adjustable model uses a self-relieving regulator to set dampener pressure. A compressed air line must be permanently attached to the regulator. The regulator allows for an easy, convenient method for readjusting the dampener pressure if the system fluid pressure changes. Adjustable units are designed for use on air operated diaphragm pumps in systems with a constant discharge pressure.

APPLICATION STORIES

APPLICATION: PULSATION DAMPENING

PROBLEM: A major pulp & paper mill in the Northwest used AODD unloading pumps. The reciprocating action of these air-operated pumps created violent pulsations that caused both pipe stress and mounting fatigue. In fact, these pulsations often caused the pumps to be pulled from their cement foundations. This created significant downtime, costly foundation repair, environmental hazards, and a dangerous working environment.

SOLUTION: A Blacoh SENTRY IV Pulsation Dampener was installed in the common discharge of the pumps to dampen these pulsations.

RESULT: Pipe stress and mounting fatigue have been eliminated. Not only have the pumps not been ripped from their cement foundations, but the mill has experienced longer life from pump components such as diaphragms and ball valves.

APPLICATION: WATER HAMMER

PROBLEM: A major producer of water treatment chemicals accessed their local water supply through a 3" PVC pipe with quick-closing valves. When the desired quantity had been measured and the valve shut, a water hammer effect with pressure spikes that exceeded the PVC pipe's burst strength was created. The PVC repeatedly broke, causing the entire plant to be shut down for repair. In addition, since pipe failure occurred under a nearby highway, it also had to be closed.

SOLUTION: A Blacoh SENTRY 10 gallon Surge Suppressor was installed on the pressure side of each quick closing valve to reduce water hammer pressure spikes.

RESULT: The damaging water hammer pressure spikes are now absorbed, no pipes have ruptured, and the plant (and nearby highway) have had no downtime due to water hammer.

APPLICATION: METERING

PROBLEM: A 300 megawatt power plant required a chemical feed system to supply hydrazine to a boiler. The hydrazine acts as an oxygen scavenger, and must be delivered in a precise and consistent quantity. While metering pumps can deliver chemicals in precise amounts, their reciprocating action will not allow delivery in a smooth and consistent flow.

SOLUTION: A Blacoh SENTRY III Pulsation Dampener was installed in the common discharge of two metering pumps to create smooth and consistent flow.

RESULT: Hydrazine is now delivered to the boiler in a precise and consistent quantity. In addition, pipe vibration has been eliminated, gauge accuracy has been maximized, and pump component stress has been reduced.

APPLICATION: SPRAYING/ COATING

PROBLEM: A decontamination facility pumped acids and water through a series of 15° spray nozzles to rinse radiation from contaminated metals. However, the pulsating action of their reciprocating pumps caused uneven spray into the rinse tanks, and the metals were not rinsed completely.

SOLUTION: A Blacoh SENTRY 1 Pulsation Dampener was installed at each pump discharge manifold to eliminate the surging flow of the pumps and ensure complete coverage and thorough cleaning.

RESULT: The even flow ensures that the metal product is completely rinsed of radiation. Furthermore, both process time and the amount of acid required have been reduced, which increased productivity and profit.

PUMPING SYSTEM SOLUTIONS

SENTRY®
INLET STABILIZER
Extends Life Of All Inlet System Components

SENTRY®
PULSATION DAMPENER
Remove Up To 99% Of System Shock

SENTINEL®
DIAPHRAGM SEALS
Protect & Isolate System Instrumentation

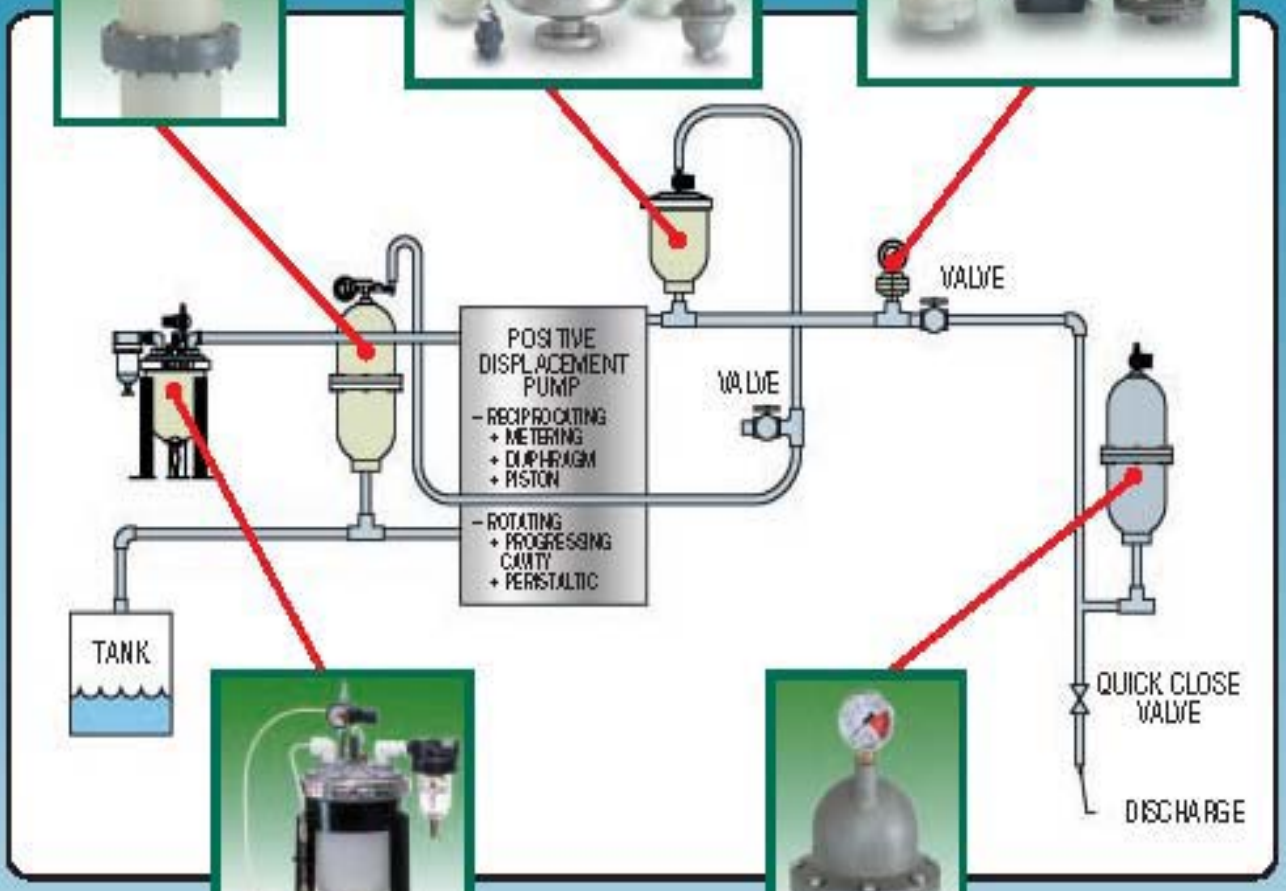

SPILL-STOP®
LEAK CONTAINMENT
Stops Spills Caused By Pump Diaphragm Failure

SENTRY®
SURGE SUPPRESSOR
Eliminate Hydraulic Surge & Water Hammer

UNDERSTANDING PULSATION AND WATER HAMMER CONTROL

PULSATION DAMPENING

Positive displacement pumps create pulsation and hydraulic shock purely by the reciprocating nature of the pump's stroking action. During the discharge stroke of a pump, fluid pressure takes the line of least resistance, displacing the bladder in the dampener, and compressing the trapped gas. As the pump begins its next cycle, fluid flow stops momentarily allowing the compressed gas to expand, forcing the bladder to push the accumulated fluid back into the discharge line. This fills the void created in the pipeline by the pump's cycle shift. Whether a piston, plunger, air diaphragm, peristaltic, gear, or diaphragm metering pump, a SENTRY Pulsation Dampener placed at the pump's discharge will produce a steady fluid flow up to 99% pulsation free; protecting the entire pumping system from the damaging effects of shock.

SURGE SUPPRESSION & WATER HAMMER

When fluid in motion is abruptly stopped, a hydraulic surge is created in the system. Hydraulic surge is often referred to as "water hammer". The kinetic energy, released as pressure, can spike up to six times the system's operating pressure, destroying system instrumentation, pumps, pipes, fittings, and valves. Without a suppression device, the shock wave travels the length of the pipe back to the pump, then reverses again, oscillating back and forth until friction dissipates the pressure spike or a system component fails.

There are several major culprits that produce water hammer; quick closing valves, back surge, pump start up and pump shut down. Quick closing valves can be defined as valves that close within one and one-half seconds. Quick closing valves have the potential of stopping large volumes of energized fluid, producing violent water hammer. The pump start up also stops fluid in motion. During pump start up, fluid in a pipe is static and must be accelerated. The pumped fluid is abruptly stopped when it contacts the static fluid in the pipe, again creating a shock wave. A SENTRY Surge Suppressor installed at the pump's discharge will provide the accumulation capacity to absorb the rapid fluid acceleration and prevent a pressure spike from occurring. As the surge enters the Suppressor, the gas inside is compressed, the fluid is accumulated and the shock wave is absorbed. When steady system flow rate is achieved, pressure and fluid are slowly released back into the system by the compressed gas.

At pump shut-down, either planned or failure, fluid flow will momentarily continue away from the pump due to momentum. As the flow continues, a void, called column separation can occur at the pump's discharge. When fluid momentum is stopped due to pipe friction, the liquid will usually reverse toward the void area of the pump discharge. The reversing fluid will slam into the check valve usually located at the pump discharge and a water hammer pressure spike will occur. Depending upon the design of the piping system and the fluid involved, the voided area can actually become sub-atmospheric which can significantly increase the pressure spike.

INLET (SUCTION) STABILIZATION

Without a sufficient supply of fluid a pump will not perform efficiently. Fluid "starvation" is caused by unbalanced hydraulics from friction, acceleration, and head. A reciprocating pump further complicates the issue by emitting high-frequency pressure waves created by the inlet valves opening and closing. In high inlet pressure situations, a pump's inlet valves create water hammer by their opening and closing action; increasing pipe and pump damage, and draining system efficiency.

In suction lift and horizontal suction applications, the pumps' inlet valve action actually decreases inlet fluid pressure. A "starved" or cavitating pump will be unable to produce specified flow rates due to the incomplete filling of cylinders and liquid chambers. In addition, cavitation will result in the premature failure of pump parts. A SENTRY Suction Stabilizer at the pump's inlet will act as an accumulator, reducing pressure fluctuations and aid in filling the pump head with fluid during each inlet stroke. In high suction lift applications it is also important not to lose the acceleration of the fluid created with each suction stroke of the pump. A Suction Stabilizer will momentarily maintain the flow of the accelerated fluid. The fluid flows into the stabilizer as the pump shifts, and then out as the inlet valve re-opens, maintaining even pressure and steady flow, minimizing cavitation.

THERMAL EXPANSION

Many fluids change volume due to temperature changes. As the temperature of a fluid rises, the fluid expands. In a closed or loop system a volumetric increase in fluid can create a rise in pressure beyond the limits of safety. The increase in pressure can result in ruptured pipes and fittings, destroyed in-line instrumentation, burst pressure relief valves and contaminated surroundings. A SENTRY Thermal Expansion Chamber installed in the pipeline will accumulate the expanded fluid, eliminating a dangerous rise in pressure.

ACCUMULATORS, AUXILIARY ENERGY, FLUID MAKE-UP & TRANSFER BARRIER

Fluids flowing in a system can be accumulated during one part of the process cycle, and then released when needed during another part of the cycle. The release can be based upon the pressure of the system or by the opening/closing of a valve. The SENTRY Accumulator can be used to maintain process line pressure and store fluid for other uses, such as to back flush filters or to draw off sample fluid.

Accumulators can be used as a Transfer Barrier where pressure on one side of a system needs to be transferred to another side without the mixing of the fluids. The accumulator is installed in-line with the two fluids entering at opposite ends, separated by the bladder. As the pressure of one fluid increases, it pushes the bladder against the other fluid, transferring the increase in pressure.

Please call your local distributor:

BLACOH FLUID CONTROL

601 Columbia Ave, Bldg. D, Riverside, CA 92507 • USA
Tel: (800) 603-7867 or (951) 342-3100 • Fax: (951) 342-3101
E-mail: sales@blacoh.com • Website: www.blacoh.com

5.2 Revolution detector

efector100

ifm electronic

Inductive sensors

IGS208

IGKC008BASKG/M/US
Inductive sensor
Metal thread M18 x 1
Plug and socket

Operation as 3-wire or 2-wire possible
Increased sensing range
Optical setting aid (2 LED)
gold-plated contacts

Sensing range 8mm [f]
flush mountable

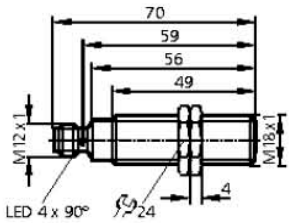

CE c UL us LISTED

Electrical design	**3-wire DC PNP; 2-wire DC PNP/NPN**
Output	**normally open**
Operating voltage [V]	10...30 DC
Current rating [mA]	100
Minimum load current [mA]	2 *)
Short-circuit protection	pulsed
Reverse polarity protection	yes
Overload protection	yes
Voltage drop [V]	< 2.8
Leakage current [mA]	< 0.5 *)
Current consumption [mA]	< 12 (24 V)
Real sensing range [mm]	8 ± 10 %
Operating distance [mm]	0...6.5
Switch-point drift [% of Sr]	-10...10
Hysteresis [% of Sr]	3...15
Switching frequency [Hz]	400
Correction factors	mild steel = 1 / stainless steel approx. 0.7 / brass approx. 0.5 / Al approx. 0.4 / Cu approx. 0.3
Operating temperature [°C]	-25...70
Protection	IP 67, II
EMC	EN 61000-4-2 ESD: 4 kV CD / 8 kV AD EN 61000-4-3 HF radiated: 10 V/m (80...1000 MHz) EN 61000-4-4 Burst: 2 kV EN 61000-4-6 HF conducted: 10 V (0.15...80 MHz) EN 55011: class B
Housing material	brass special coated; active face: PBT (Pocan)
Function display	
Switching status LED	yellow
Setting aid LED	red
Connection	M12 connector; gold-plated contacts
Remarks	suitable for PLC type 1 according to IEC 61131-2 *) only in 2-wire operation
Accessories (included)	2 lock nuts

Wiring

Wiring IGS208

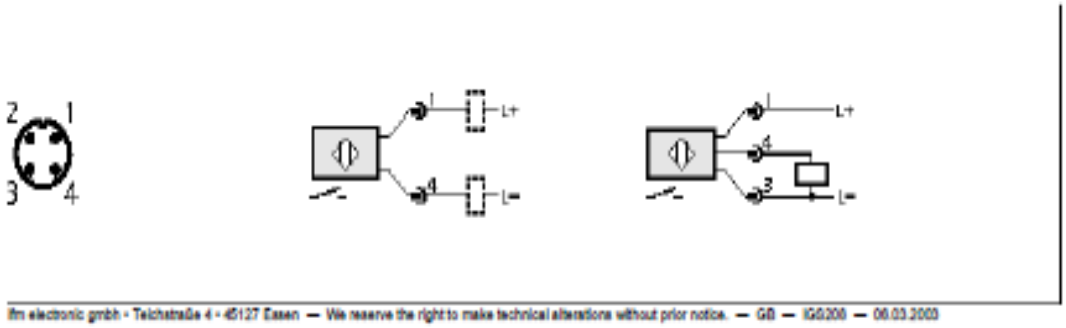

ifm electronic gmbh • Teichstraße 4 • 45127 Essen — We reserve the right to make technical alterations without prior notice. — GB — IGS208 — 06.03.2003

ecomat 400

ifm electronic

Connection technology

EVC04A

ADOAH040VAT0002H04/3G/2D
Socket

For sensors with
M12 connector

Free from silicone
Free from halogen
gold-plated contacts
ATEX approval
Group II, category 3G/2D
Approval
BVS 08 ATEX E 109 U
IECEx BVS 08.0041 U

Electrical design	AC/DC
Operating voltage [V]	60 AC / 60 DC
Current rating [A]	2
Design	angled
Operating temperature [°C]	-20...60
Protection	IP 67 *), II
Marking of the unit	Ex II 3G Ex nA II Ex II 2D Ex tD A21 IP67
Material body	housing: TPU orange; sealing: Viton
Material nut	stainless steel (316S12)
Tightening torque for knurled nut [Nm]	1.2...1.5
Connection	PUR cable / 2 m; 4 x 0.34 mm² (42 x Ø 0.1 mm); Ø 4.9 mm; halogen-free
Sheath colour	black
Remarks	*) IP68/IP69K outside hazardous areas

Wiring

Core colours
BK black
BN brown
BU blue
WH white

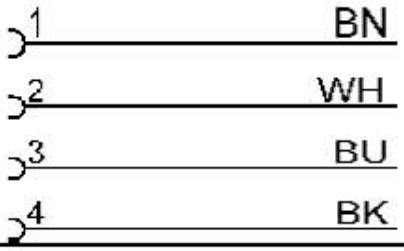

5.3 Pressure transmitter

Pressure transmitter IFM PF2653

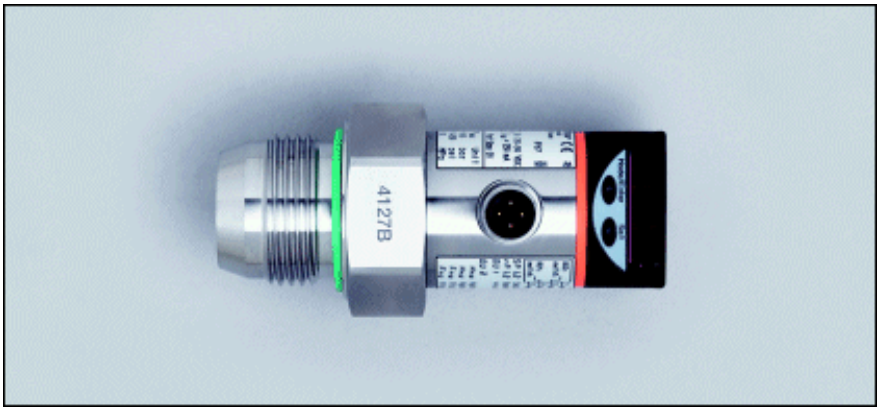

- Freely rotable housing 350°
- Process connection G1 A
- Zero & span adjustable
- 2 outputs (Switching output & switching output or analogue output)
- 7-segment LED display
- Measuring range 1.0 – 25 bar
- Possibility of high pressure level detection →
    - Example: If maximum the pressure is 12 bar, you can set the detection level to 13,5 bar. Then pressure transmitter sends signal to the data terminal.

Pressure sensors

PF2653

Combined pressure sensor
PF26

Connector
Process connection G1 A

no dead space
Freely rotatable housing 350°
Zero and span adjustable
Function programmable

2 outputs
OUT1 = switching output
OUT2 = switching output or analogue output

7-segment LED display

Measuring range
-1.0...25 bar
-15...363 PSI
-0.1...2.5 MPa

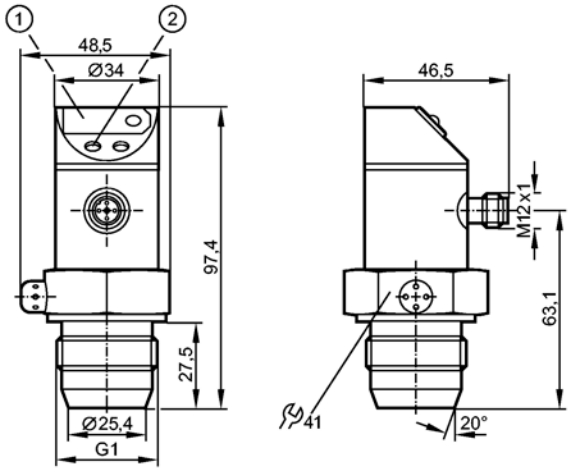

1: 7-segment LED display
2: Programming button

Made in Germany

EHEDG Certified

Application	**Type of pressure: relative pressure** **Hygienic systems, viscous media and liquids with suspended particles** **Liquids and gases**
Electrical design	**DC PNP/NPN**
Output	**2 x normally open / closed programmable or 1 x normally open / closed programmable + 1 x analogue (4...20 mA / 0...10 V; scaleable 1:4)**

Operating voltage	[V]	20...30 DC		
Current rating	[mA]	2 x 250		
Short-circuit protection		pulsed		
Reverse polarity protection		yes		
Overload protection		yes		
Integrated watchdog		yes		
Voltage drop	[V]	< 2		
Current consumption	[mA]	< 60		
Analogue output		4...20 mA / 0...10 V		
Load for analogue output [Ω]		4...20 mA: max. (Ub - 10 V) x 50 / 0...10 V: min. 2000		
Pressure rating		100 bar	1450 PSI	10 MPa
Bursting pressure min.		350 bar	5070 PSI	35 MPa
Setting range				
Set point, SP		-0.8...25.0 bar	-12...363 PSI	-0.08...2.50 MPa
Reset point, rP		-0.9...24.9 bar	-13...362 PSI	-0.09...2.49 MPa
Analogue start point, ASP		-1.0...18.8 bar	-15...272 PSI	-0.10...1.88 MPa
Analogue end point, AEP		5.3...25.0 bar	76...363 PSI	0.53...2.50 MPa
in steps of		0.1 bar	1 PSI	0.01 MPa
Factory setting		SP1 = 6.3 bar; rP1 = 5.8 bar ASP = 0.0 bar; AEP = 25.0 bar		

PF2653

Programming options	hysteresis / window function; N.O. / N.C; output polarity; current / voltage outputs; damping; calibration of displayed values; display can be rotated / deactivated; display unit
Accuracy / deviations (in % of the span) Turn down 1:1	
Characteristics deviation *)	< ± 0.6
Linearity	< ± 0.5
Hysteresis	< ± 0.1
Repeatability **)	< ± 0.1
Long-term stability ***)	< ± 0.1
Temperature coefficients (TEMPCO) in the temperature range 0...80° C (in % of the span per 10 K)	
Greatest TEMPCO of the zero point	< ± 0.1
Greatest TEMPCO of the span	< ± 0.2
Power-on delay time [s]	0.2
Min. response time switching output [ms]	3
Damping for the switching output (dAP) [s]	0...4
Switching frequency [Hz]	≤ 170
Response time analogue output [ms]	3
Damping for the analogue output (dAA) [s]	0 - 0.1 - 0.5 - 2
Display unit	bar, PSI, MPa
Ambient temperature [°C]	-25...80
Medium temperature [°C]	-25...80
Storage temperature [°C]	-40...100
Protection	IP 67, III
Insulation resistance [MΩ]	> 100 (500 V DC)
Shock resistance	DIN IEC 68-2-27:50 g (11 ms)
Vibration resistance	DIN IEC 68-2-6:20 g (10...2000 Hz)
Switching cycles min.	100 million
EMC	EN 61000-4-2 ESD: 4 kV CD / 8 kV AD EN 61000-4-3 HF radiated: 10 V/m EN 61000-4-4 Burst: 2 kV EN 61000-4-6 HF conducted: 10 V
MTTF [Years]	170
Housing materials	stainless steel 316L / 1.4404; PBT (Pocan); PC (Makrolon); PEI; EPDM/X (Santoprene); FPM (Viton)
Materials (wetted parts)	ceramics (99.9 % Al2 O3); PTFE; stainless steel 316L / 1.4435; surface characteristics: Ra < 0.4 / Rz 4
Display	Switching status 2 x LED red Function display 7-segment LED display Measured values 7-segment LED display
Connection	M12 connector; gold-plated contacts
Weight [kg]	0.384
Remarks	*) linearity, incl. hysteresis and repeatability; (limit value setting to DIN 16086) **) with temperature fluctuations < 10 K ***) in % of the span per year The 3A authorisation is only valid if adapters with 3A authorisation are used for installation.

Wiring

Programming of the output function
(OUT1 / OUT2):
Hno = hysteresis / normally open
Hnc = hysteresis / normally closed
Fno = window function / normally open
Fnc = window function / normally closed
Complementary outputs:
output 1: = Hno, output 2: = Hnc
(with the same SP / rP)

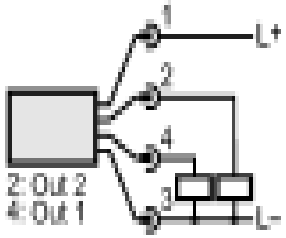

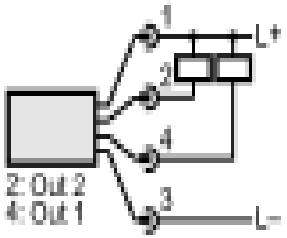

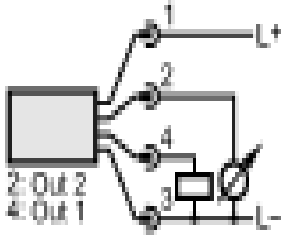

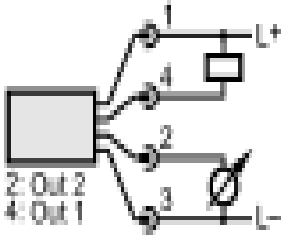

Programming of the analogue output (OUT2):
I = current output (4...20 mA)
U = voltage output (0...10 V)

FLOWROX

5.4 Hose leak detector

LPP-D & LPP-T pumps are using same leak detector model. Detector is placed below the pump bearing level.

Float type: RSF54Y100RC-NC with detector connector to the pump

Other models in RFS-series:

- RFS51 / 52
- RFS53
- RFS56

Fast hose leak detection

- ✓ Only a small loss of pumped medium
- ✓ Prevents bearing contamination

Atex-classified pumps are using Flotect's model L6 leak detectors.

All necessary datasheets on the following pages

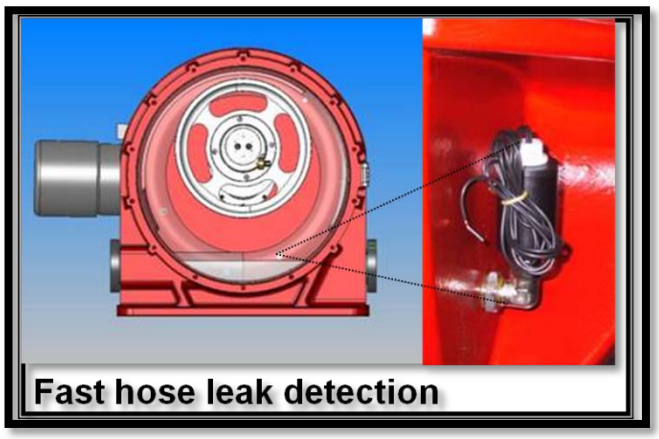

RSF50 Series

The RSF50 series is compact vertically mounted devices designed to achieve reliable switching. Mounting is in the top or bottom of the tank from the inside, so requires access to the inside of the tank.

They are manufactured in a variety of materials, with a choice of gasket materials, to suit most commonly used liquids.

The switch action may be reversed by removing the float, inverting it and then refitting it to the stem.

All types, except those in PVC, are also available with 1/8" NPT tapered thread.

TECHNICAL SPECIFICATIONS	RSF51/52	RSF53	RSF54	RSF56
Material	PVC	Nylon	Polypropylene	Polyphenylene Sulphide (PPS)
Colour	Light Grey	Black	Opaque	Grey
Temp. Range °C	-20 / +60	-20 / +75	-20 / +100	-10 / +120*
°F	-4 / +140	-4 / +167	-4 / +212	+14 / +248*
Min, Fluid S. G.		0.7	0.8	0.85

*Maximum temperature requires ETFE cable to be specified.

ELECTRICAL SPECIFICATIONS	Z (RSF51/52)	Y	V
Contact Form	N/O (N/C)	N/O (N/C)	C/O
VA Rating	10	25	3
Switching Voltage AC	125	240	48
Switching Voltage DC	150	120	28
Switching Current Max. A	0.5	0.6	0.25
Breakdown Voltage DC	215	800	150

All ratings are for resistive load only

OUTLINE DIMENSIONS

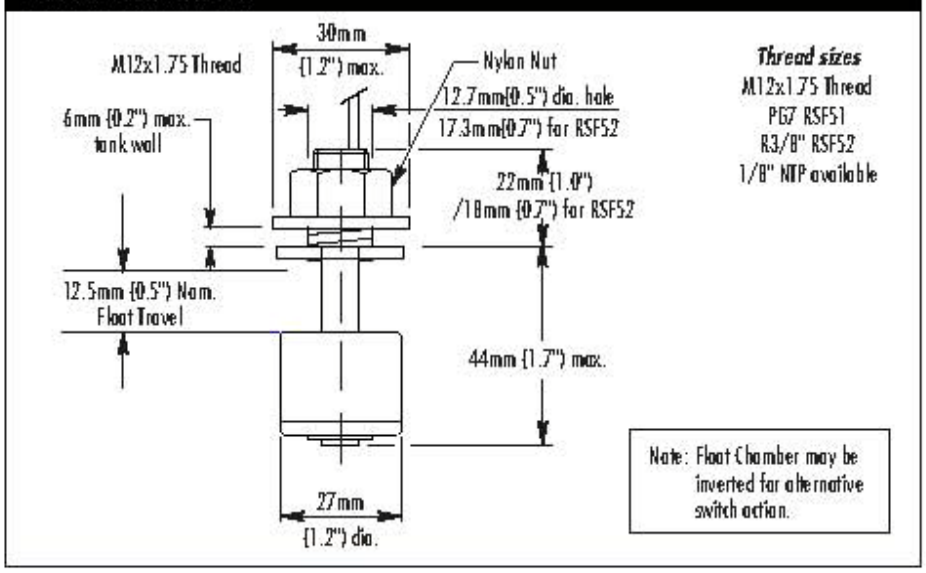

- *Compact design*
- *User configurable N/O or N/C operation*
- *Reliable reed switch contacts*
- *Available in PVC, PPS, Polypropylene and Nylon*
- *WRAS approved*
- *Many variants are UL recognised components File Number E171218*

Crydom Magnetics Ltd
7 Cobham Road
Ferndown Industrial Estate
Wimborne
Dorset BH21 7PE
Tel: +44 (0) 1202 897969
Fax: +44 (0) 1202 891918
magnetics@crydom.com
www.crydom.co.uk

Every effort has been made to ensure that the descriptions and specifications quoted are correct, however, no liability can be accepted for any errors or omissions in this data. The detail specifications are subject to change without prior notice.

Series L6

FLOTECT® Liquid Level Switch

Easy In-wall or External Installation, Up to 2000 psig (138 bar)

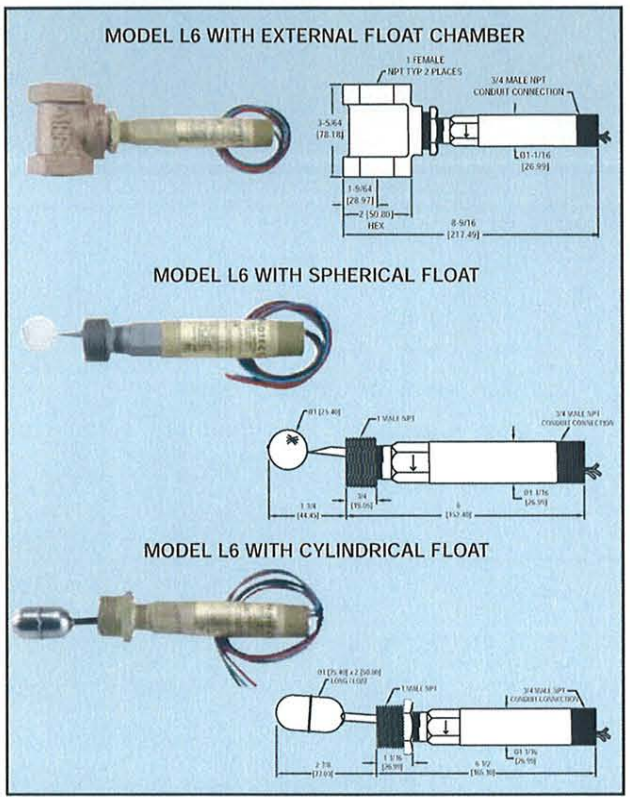

SPECIFICATIONS

Service: Liquids compatible with wetted materials.

Wetted Materials:

- **Float:** Solid polypropylene or 304 SS.
- **Lower Body:** Brass or 303 SS.
- **Magnet:** Ceramic.
- **External Float Chamber (Tee):** Matches lower body choice of brass or 303 SS.
- **Other:** Lever Arm, Spring, Pin, etc.: 301 SS.

Temperature Limit: -4 to 220°F (-20 to 105°C) Standard, MT high temperature option 400°F (205°C)(MT not UL, CSA or ATEX). ATEX compliant AT option ambient temperature: -4 to 167°F (-20 to 75°C) process temperature: -4 to 220°F (-20 to 105°C).

Pressure Limits: See chart below.

Enclosure Rating: Weatherproof and Explosion-proof. Listed with UL and CSA for Class I, Groups A, B, C and D; Class II, Groups E, F, and G. (Group A on stainless steel body models only).ATEX CE 0344 Ex II 2 G EEx d IIC T6 Process Temp≤75°C. EC-Type Certificate No.: KEMA 04ATEX2128

Switch Type: SPDT snap switch standard, DPDT snap switch optional.

Electrical Rating: UL models: 5A @ 125/250 VAC (V~). CSA and ATEX models: 5A @ 125/250 VAC (V~); 5A res., 3A ind. @ 30 VDC (V=). MV option: .1A @ 125 VAC (V~). MT option: 5A @125/250 VAC (V~). [MT option not UL, CSA or ATEX].

Electrical Connections: UL models: 18 AWG, 18" (460 mm) long. CSA and ATEX models: terminal block.

Upper Body: Brass or 303 SS.

Conduit Connection: 3/4" male NPT standard, 3/4" female NPT on junction box models.

Process Connection: 1" male NPT on models without external float chamber, 1" female NPT on models with external float chamber.

Mounting Orientation: Horizontal with index arrow pointing down.

Weight: Approximately 1 lb (.5 kg) without external float chamber, 1.75 lb (.8 kg) with external float chamber.

Specific Gravity: See chart below.

Agency Approvals: UL, CSA, CE and ATEX.

Model No.	Body	Installation	Float Material	Max. Pressure psig (bar)	Min. Sp. Gr.
L6EPB-B-S-3-O	Brass	Side Wall Mounting	Polypropylene Spherical	1000 (69)	0.9
L6EPB-B-S-3-A	Brass	Side Wall Mounting	304 SS Cylindrical	200 (13.8)	0.5
L6EPB-B-S-3-C	Brass	Side Wall Mounting	304 SS Spherical	350 (24.1)	0.7
L6EPB-B-S-3-B	Brass	Brass External Float Chamber (Tee)	Polypropylene Spherical	250 (17.2)	0.9
L6EPB-B-S-3-H	Brass	Brass External Float Chamber (Tee)	304 SS Spherical	250 (17.2)	0.7
L6EPB-S-S-3-O	303 SS	Side Wall Mounting	Polypropylene Spherical	2000 (138)	0.9
L6EPB-S-S-3-A	303 SS	Side Wall Mounting	304 SS Cylindrical	200 (13.8)	0.5
L6EPB-S-S-3-C	303 SS	Side Wall Mounting	304 SS Spherical	350 (24.1)	0.7
L6EPB-S-S-3-S	303 SS	304 SS External Float Chamber (Tee)	Polypropylene Spherical	2000 (138)	0.9
L6EPB-S-S-3-L	303 SS	304 SS External Float Chamber (Tee)	304 SS Spherical	350 (24.1)	0.7

Surprisingly compact, the Series L6 Flotect® Level switch is designed and built for years of trouble-free service in a wide variety of process liquid level applications. Operation is simple and dependable with no mechanical linkage as the level switch is magnetically actuated. The float lever pivoted within the body moves when the process liquid displaces the float. A magnet on the opposite end of the float lever controls a second magnet on the switch actuating lever located in the switch housing.

FEATURES

- Leak proof lower body machined from bar stock
- Choice of models for direct side wall mounting or mounted in a tee to act as an external float chamber
- Weatherproof
- Explosion-proof (listings included in specifications)
- Electrical assembly can be easily replaced without removing the unit from the installation so that the process does not have to be shut down
- Sensitive to level changes of less than 1/2" (12 mm)

Options:

Gold Plated Contacts option for dry circuits,add suffix **-MV** (see electrical rating in specifications)

High Temperature option rated 400°F (204°C), add suffix **-MT** (see electrical rating in specifications, no listings or approvals, only available on models with stainless steel floats)

CSA and UL approved construction, includes weatherproof and explosion-proof junction box, add suffix **-CSA**

ATEX approved construction includes, weatherproof and explosion-proof, junction box, add suffix **-AT**

DPDT contacts, change seventh character in model number to "D". Example: L6EPB-B-D-3-O

303 Stainless Steel Upper Body, change fifth character in model number to "S". Example: L6EPS-S-S-3-S

Options Not Shown: 1-1/2" and 2" male NPT process connection, 2" female NPT connection tee, and top mount.

Level