SAVONIA

Wind-Solar Hybrid Power System

Jin Fei

Bachelor's Thesis

18. 10. 2014 Natural Resources and the Environment

Bachelor's degree (UAS)

SAVONIA UNIVERSITY OF APPLIED SCIENCES **THESIS**
Abstract

Field of Study Natural Resources and the Environment			
Degree Programmer Degree Programme in Industrial Management			
Author(s) Jin Fei			
Title of Thesis Wind-solar Hybrid Power System			
Date	18.10.2014	Pages/Appendices	52
Supervisor(s) Ritva Käyhkö			
Client Organisation/Partners			

Abstract:

In the development and utilization of new energy sources, the solar energy and wind energy are paid more attention by various countries, and have become a new field of energy development and utilization of the highest level, the most mature technology, the most widely used and commercial development conditions for new energy. But both the traditional wind power system and solar power system have the characteristic of energy instability. Therefore, wind-solar hybrid power system was proposed in 1981. The system is defined as complementary in wind energy and solar energy.

In this design, on the basis of the operation of wind-solar hybrid power generation system, the battery charger of the energy conversion system and inverter are studied. In order to improve the operating frequency of the power switch and reduce the device volume and power consumption, the soft-switch technology will be applied to the battery charger, and the charger is designed with maximum power point tracking function. In the design of the inverter, the SPWM modulation techniques are used. Meanwhile, the entire system control chip uses TMS320LF2407DSP of TI Company, and the system functions are merged and the main software programs are designed.

Keywords
Wind-solar hybrid system, Battery charger, MPPT, SPWM, Inverter

CONTENTS

SYMBOLS AND ABBREVIATIONS

DC	Direct Current
AC	Alternating Current
MPPT	Maximum Power Point Tracking
PWM	Pulse Width Modulation
SPWM	Sinusoidal Pulse Width Modulation
DSP	Digital Signal Process

1 INTRODUCTION

A wind-solar hybrid power system has a high stability and reliability, which can get more stable output and greatly reduce the storage capacity of the battery, through rational design and matching of system, which can reduce or basically not start the standby power.

1.1 Research background

In the 21st century, the energy issue has become the primary problem of restricting economic development. Since the reform and opening up of China's rapid economic development, the demand for energy is quite strong; China has become the world's second largest energy consumer. However, due to excessive exploitation of oil, gas, coal and other conventional energy sources, China has been facing a serious energy crisis; the conventional energy generated a lot of pollution during use. Moreover, China has become the largest emitter of SO_2 and the second largest emitter of CO_2 around the world, China is now one of the world's most polluted countries. As known from the above, the development and utilization of new energy sources are imminent, it is important and urgent to carry out the research.

In the development and utilization of new energy sources, the solar energy and wind energy are paid more attention by various countries, and they have become a new field of energy development and utilization of the highest level, the most mature technology, the most widely used and commercial development conditions for new energy. China has a vast territory and a very rich solar energy resources. It is estimated that the total annual solar radiation throughout the country is amounting to 335kJ ~ 837kJ / cm^2 in every year. In accordance with the Meteorological Bureau estimates, accord-

ing to the calculation of 10 meters high from the ground, the national land wind energy resources are about 32.26 KW, and offshore wind power reserves are about 750 million KW. So China is very suitable for development and utilization of solar energy and wind energy. Efficient use of solar energy and wind energy resources will effectively ease the resource crisis and environmental pollution problems. (Zhou Yuzhu, 2007, P40)

From the 1950´s to nowadays, China has been working studying solar and wind power generation technology and made some breakthroughs, and thereby there are photovoltaic and wind power industries. However, due to the characteristics of wind power systems and the stand-alone independent solar power systems are intermittent. There are also some disadvantages of energy instability. Rainy days or at night, power generation efficiency of solar cells is very low or no electricity at all. It is easy to break down the wind turbine when the wind speed is great, but when the wind speed is too small, it cannot drive wind turbine power generation; the production of electricity is also very unstable. In view of above, the comprehensive utilization of wind and solar power are paid great attention to by all countries. But both the traditional wind power generating system and the solar power generating system have the shortcomings of energy instability. Therefore, wind-solar hybrid generating system was proposed in 1981 by N. E. Busch of the Danish scholars and Kollenbach. So the wind and solar power generation issues are being studied by many scholars, such as in United States, C. I. Aspliden studied meteorological issues of solar-wind hybrid conversion system. In China, Yu Huayang, also proposed wind-solar energy conversion devices. (Zhu Zhao & Zhu Changhan 2005, P168 – 169)

1.2 Development status

Currently, wind-solar hybrid power system research focuses on computer simulation system and design optimization systems, Colorado State University and the National Renewable Energy Laboratory (USA Renewable Energy Laboratory) have developed hybrid application software. The software is powerful. It is capable to accurately simulate the wind and solar power generation system. According to the structures of the power generation system, the load characteristics, installation location of wind, and sunshine intensity data are needed to get the results of 8760 hours of operation. But it's just a powerful simulation program, and itdoes not have the optimal design features. (Wang Yu 2010, P29)

In China, Chinese Academy of Sciences and Hong Kong Polytechnic University proposed a wind-solar hybrid power system optimization design with CAD software. In addition, the Energy Research Institute of Hefei University of Technology proposed a simulation model of the structure of wind-solar hybrid power generation system. The users can reconstruct the structures of wind-solar hybrid power generation system and the computer simulation calculation, which can predict the performance of the system, control strategies and rationality the efficiency of the system operation etc. (Li Shuang 2005, P38)

On the other hand, the main research of wind-solar power generation system is to uses the rapid development of the power electronic technology and microcomputer control technology to improve power supply efficiency and running stability of the system. With the help of the power electronic technology is tried to achieve the maximum output power tracking of the wind power and photovoltaic power and the inverter output of load. Nowadays, according to reports of Chinese data, some wind-solar hybrid

power generation systems are operating, such as small MoShi islands in Shandong, Tibet township ablative village scenery complementary power station, Solar-wind wireless phone, Inner Mongolia miniature wind-solar hybrid power system and so on.

1.3 Application prospects

The application prospects of wind-solar hybrid power generation system are very extensive, for now, as an independent power supply system is used in far away from the grid region. Examples include signal station of troops border posts, telecommunications relay stations, roads and railways, geological exploration and field, inspection workstations, semiconductor outdoor lighting, surveillance camera power supply, pumped storage power, remote mountainous areas and islands and so on. From a practical point of view, it is important to solve the electricity consumption of households without electricity issue. With the development of power electronics technology, the miniaturization, automation and digitization of the device will become a trend, and the study of such miniaturization energy conversion systems is very meaningful in the future. From the point of long-term development, the wind-solar power generation system has important guiding significance for independent wind power users and independent solar energy users to upgrade in the future.

1.4 The research ideas and the main content

In this design, the structures and the working principles of the system are described. As can be seen from the miniaturized, digital, centralized control of the system developing, and battery chargers and inverters are studied. The entire energy conversion system controller uses TMS320LF2407DSP of TI Company; the functions are

merged and digital energy conversion systems are designed, simplifying the complexity of the hardware circuit. The main contents are as follows:

1) After making a detailed understanding of the relevant information, the structures and working principles of wind-solar power generation systems are described.
2) A MPPT of the system is studied, and an improved MPPT control methods are presented.
3) The soft-switch technology is applied to the system, designed with battery charger of the PWM converter.
4) The digital system inverter of SPWM modulation technology is designed
5) The main system software programs are designed.

2 Description of Wind-solar hybrid power system

Wind-solar hybrid power systems are essentially complementing each other in the energy and supplying power to the load together. Regardless of day or night, wind energy resources exists.The solar energy resource is only in the daytime, but because solar energy is continuous and stable, it can make up for the intermittent characteristics and the discontinuity of wind energy in the daytime.

2.1 Structures and principles of wind-solar power system

In the beginning, the structure of wind-solar hybrid power system is the combination of the traditional and independent photovoltaic system and independent wind power system. There are two sets of control device which can be respectively used to test, to protect the wind turbine and photovoltaic array, and to control the battery charging. It will increase the system's investment. Currently, the domestic and foreign users basically use the operation structure of wind-solar power generation system in Figure 1. In this thesis, the structure is based on this study. (A.N.Celik 2002, P43)

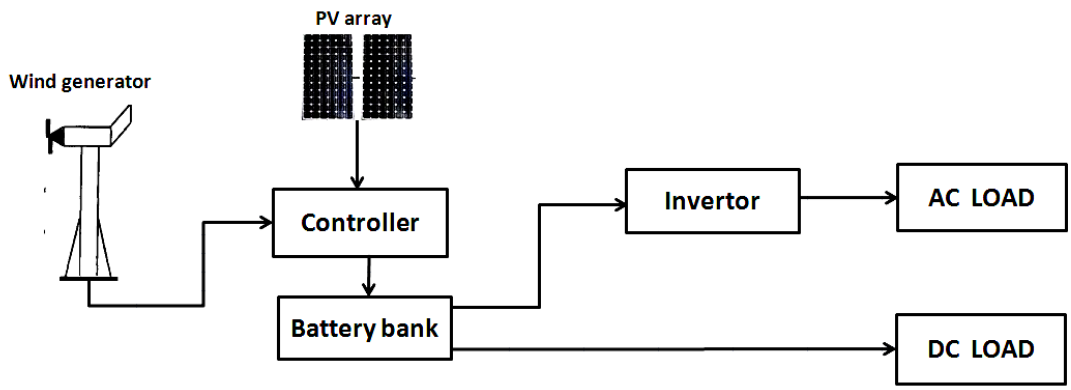

Fig 1. Structure graphics of Wind-Solar Hybrid Power System (Jin Fei)

The whole wind-solar hybrid power generation system can be divided into three parts: energy generation aspects, energy storage aspects, and energy consumption as-

pects. The energy generation aspects are composed of the wind turbine and photovoltaic arrays, which can convert wind energy and solar energy into electricity. The energy storage aspects are battery storage, which can store the electricity that is generated from wind and solar energy. The energy consumption aspects are load system, including AC load and DC load.

There are listed some advantages of wind-solar hybrid power systems in the following:

1) Compared with independent wind power systems,it can improve the stability and reliability of the electricity system.
2) Under the conditions of guaranteed power supply, it can greatly reduce the storage capacity of the battery.
3) Compared with photovoltaic systems, it can save investments. The economy of generating power is good.

2.2 The main system components

2.2.1 Wind turbine generators

Wind turbines are the absorption and conversion equipment of wind energy in wind-solar power generation systems. From the perspective of energy conversion, wind turbine consists of two parts. One is the wind turbine. Its function is to convert wind energy into mechanical energy. The other is a generator. Its function is to convert mechanical energy to electrical energy. The wind turbine generator is divided into DC generators and AC generator. In the small wind power and wind-solar hybrid power generation systems, the alternators are commonly used. (Xu Daping 2011, P44)

According to the aerodynamic characteristics of the wind turbine, the wind turbine output mechanical power can be expressed as:

$$P_m = \frac{1}{2} C_p \, p \pi R^2 V^3 \quad (2\text{-}1)$$

In this formula, C_P is the wind power coefficient. R is the radius of the wind wheel, the unit is m. p is the air density. V is wind speed. As known from Formula 2-1, when wind turbine blades size, wind speed and air density are a certain value. The only factor is wind energy utilization coefficient C_P that affects the power output, C_P is proportional with the output power, and the C_P is a function that the tip speed divided by λ, λ can be expressed as:

$$\lambda = w_r/V = 2\pi Rn/60v \quad (2\text{-}2)$$

In this formula, w_r is wind turbine angular velocity, in units of rad/s; n is the fan speed, the unit is r/min. Wind turbine characteristics are expressed in the relationship of C_P and λ. The curve $C_p = f(x)$ is showed in Figure 2.

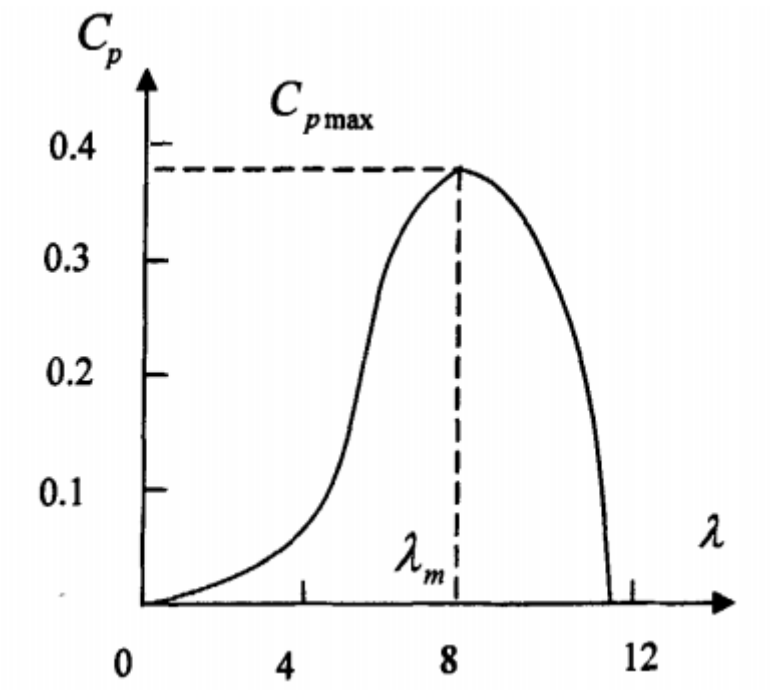

Figure 2. Relationship curve of C_P and λ (Xu Daping 2011, P44)

According to Figure 2, C_p is changing when λ changed. There is the point of λ_m that can get the maximum power coefficient, which is the maximum output power point.

2.2.2 The solar cells

Solar cell panels convert solar energy into electrical energy. In practical applications, the output characteristics of the solar cells are very important to the design system. It refers that the solar cells are demonstrated by the volt-ampere characteristics at a certain temperature and sunlight intensity, which is the corresponding relationship between the output voltage and output current, often referred to as I-V characteristic in Figure 3. (Wang Junyi 2007, P41)

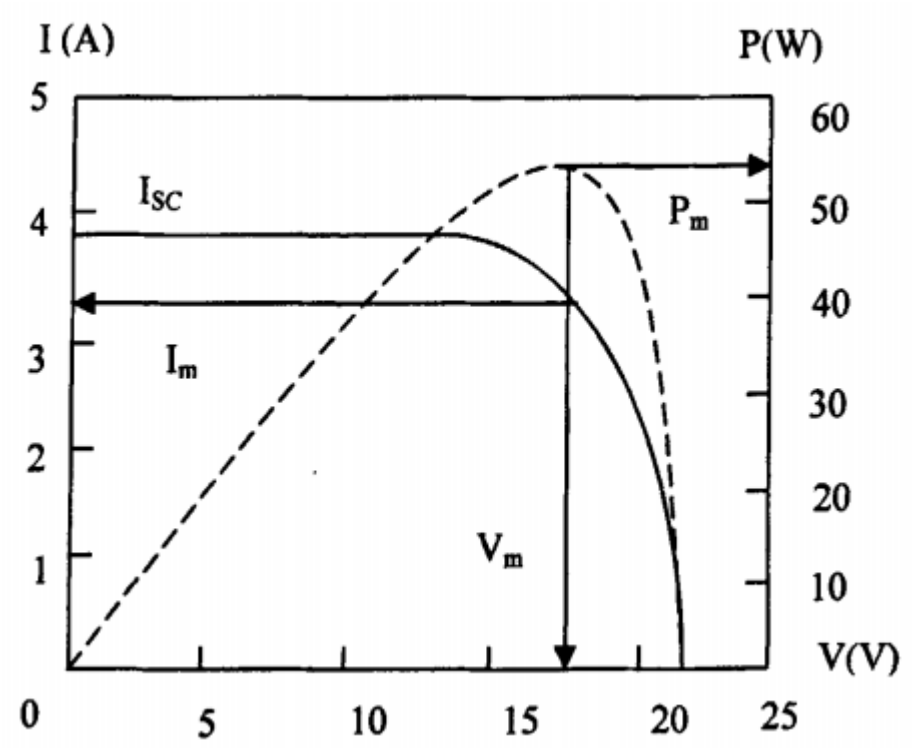

Figure 3. I-V Characteristic curve of solar cells (Wang Junyi 2007, P41)

As can be seen from Figure 3, it is obvious that the solar cell is neither constant voltage source nor constant current source, but it is a non-linear DC power supply. Its output current is fairly constant in most of the work voltage scope, when the voltage

rises to a sufficient height, the current rapidly decreases to zero. At a certain temperature and sunlight intensity, there is only a maximum power output point. According to the characteristic curve, it can be defined some important technical parameters of solar cells. (Wang Junyi 2007, P41)

(1) Short-circuit current I_{sc}: at a certain temperature and sunlight intensity, it can output the maximum current.

(2) Open circuit voltage V_{oc}: at a certain temperature and sunlight intensity, it can output the maximum voltage.

(3) Maximum power point current I_m: at a certain temperature and sunlight intensity, it is the current of the maximum power point.

(4) Maximum power point voltage v_m: at a certain temperature and sunlight intensity, it is the voltage of the maximum power point

(5) The maximum power point P_m: at a certain temperature and sunlight intensity, it can output maximum power

Changing the sunshine intensity and other conditions remaining unchanged, the I-V and P-V characteristics are known in sunlight intensity, as shown in Figure 4 and Figure 5. Figure 4 shows that the short-circuit current is proportional to the sunlight intensity, and the change of open circuit voltage is very slow.

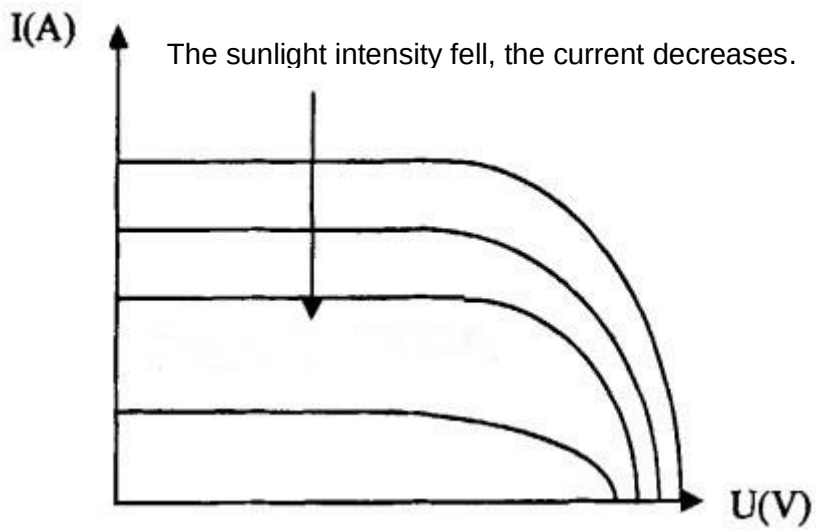

Figure 4. Impact of sunshine on solar cells (Ele-tech, 4b)

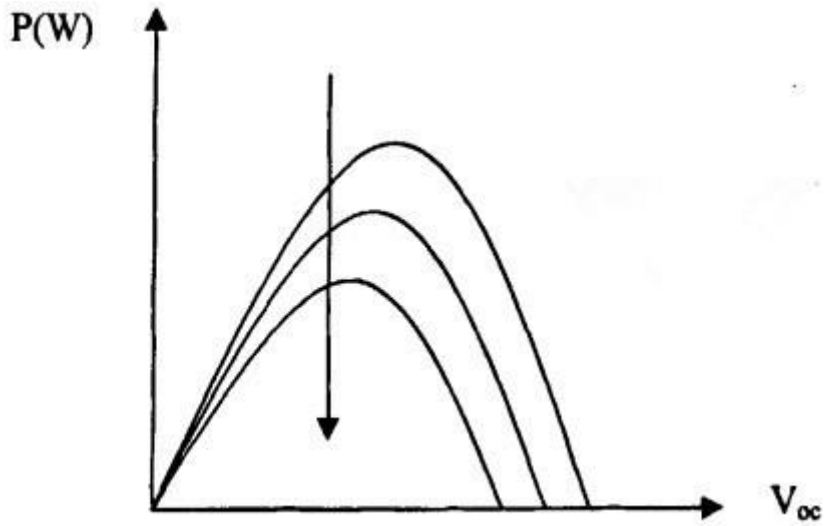

Figure 5. P-V characteristic curves on different sunshine situations (Ele-tech, 4a)

According to Figure 5, when sunlight intensity decreases, the maximum power output of solar cells is also reducing, and the change of the maximum power point voltage is very slow.

When the battery temperature is changed, the open circuit voltage V_{oc} is also changing. The short circuit current I_{sc} has a slight change (Temperature change referred to is the temperature change of solar cells here, not the ambient temperature changes).

When the battery temperature rises, V_{oc} decreases, and I_{sc} is slightly increased. as shown in Figure 6.

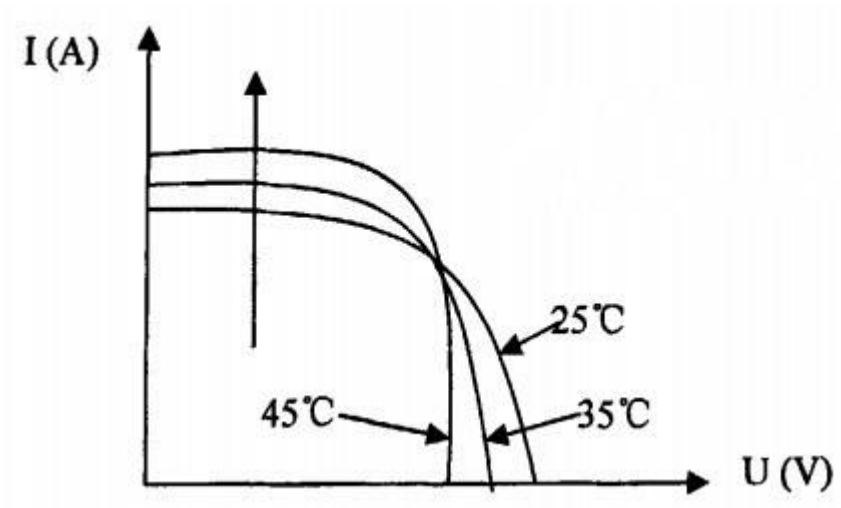

Figure 6.i Impact of temperature on solar cells (Lu Zhiguo 2009, P26)

There are three previous figures illustrating the following conclusions: at a certain temperature and sunlight intensity, the output power of solar cells has a maximum value. The sunshine intensity has a great influence on the output power of solar cell in the daytime, and the impact of solar cells temperature on output power is relatively small. The track of solar cells maximum power point is approximately perpendicular to the voltage axis line. According to the above, it is important that tracking the solar cells maximum power point with some control means to improve the utilization efficiency of solar cells in wind-solar hybrid power system. (Lu Zhiguo 2009, P26)

2.2.3 Battery

Battery is the storage device of the wind-solar power generation systems. It belongs to the electrochemical batteries, it can convert chemical energy into electrical energy. There are some characteristics in the charge-discharge process of battery:

1) Battery operation efficiency: the percentage is that the discharge energy divided by charge energy. It can be expressed as:

$$\eta_w = I_d*U_d*t_d/I_c*U_c*t_c = \eta a* U_d/ U_{c*}100\% \quad (2\text{-}3)$$

In formula 3, U_d and U_c are respectively the average voltage during charging and discharging; I_d and I_c are respectively the average current of charging and discharging.

2) State of charge (SOC): it is the ratio of the amount charged and the battery rated capacity. The formula is as follows:

$$SOC = Q(t)/Q_r \quad (2\text{-}4)$$

In formula 4, Q(t) is the amount charged, Q_r is the battery rated capacity.

3) Depth of discharge (DOD): it is the ratio of the amount of battery discharge and the battery rated capacity.

$$DOD = Q(d)/Q_r = 1 – SOC \quad (2\text{-}5)$$

Battery life and the depth of discharge of the battery are closely related. When the capacity of the battery is constant, for a certain depth of discharge, the maximum cycle times is the ratio of the capacity and depth of discharge.(Lu Zhiguo 2009, P31)

There are three main operating states of battery: discharge status, charging status and floating charge status. When the battery is in the discharged state, the battery will convert chemical energy into electrical energy, and supply to the load. Charging status is conducted to store energy after the battery discharge. In this situation, electrical energy is converted into chemical energy and stored. Floating charge status is that battery maintains a certain amount of chemical energy and keeps the storage status. Battery energy storage cannot lose because of the discharge in floating charge status. Discharge, charge and floating charge constitute a complete operation of the battery. The working flow is shown in Figure 7. (Zhu Songran 2002, P21)

According to Figure 7, in the beginning, full charged battery can discharge at a constant current. As soon as it starts to discharge, the battery voltage decreases drastically, and then the voltage rises, when the battery reach a certain voltage, the battery voltage will continue to decrease with the battery continuing to discharge. This is a complex process, which is influenced by some discharge conditions, including discharge efficiency, ambient temperature, the initial state of charge of the battery and types of the battery. With the deepening of the discharge, the battery voltage drop rate will continue to increase. After voltage drops to a certain value and it will rapidly reduce, it is indicated that the battery is cut-off discharge status. When it changes to cut-off discharge voltage, the battery discharge should be stopped. After the battery changes to cut-off discharge voltage, the load is disconnected, and battery voltage rebounded significantly. At the same time, battery begins to enter the charging status, which will charge the battery at a constant current in charging process, then the battery voltage will gradually rise until the voltage reaches the float voltage. The charging current will reduce according to the exponential law until the battery reaches an adequate state, and keep the fully charged state of battery. (Zhu Songran 2002, P22)

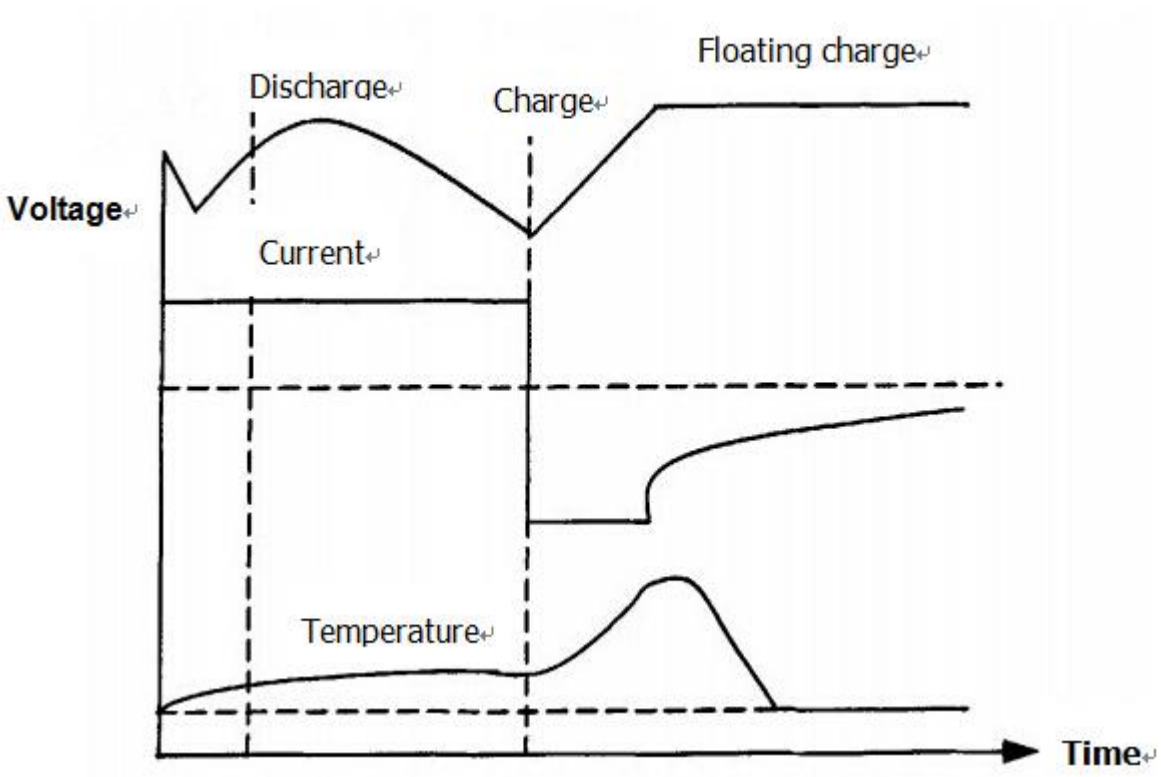

Figure 7. State chart of battery circulation working (Zhu Songran 2002, P22)

Floating system is used to fix batteries, and to supply DC power to the loads. Wind-solar hybrid power generation systems are used as an independent power generation system, which need to provide the loads with an uninterrupted electrical energy, so the battery uses floating systems to operate.

2.2.4 DC - DC converter

DC-DC converter is an electronic circuit which converts a source of direct current (DC) from one voltage level to another. It is a kind of power converter. It is a semiconductor switching device, controlling the turn-on and turn-off time of the switching device, cooperating with the inductance, capacitance or the high-frequency transformer and a control device to continuously change and control the output of DC voltage and conversion circuit. In wind-solar hybrid power generation systems, it is converting solar

and wind energy into electricity, which can be stored in battery by the charger and the battery charger is essentially a DC-DC converter. The main part of the battery charger is Buck DC - DC converter in this thesis. The principle is shown in Figure 8.

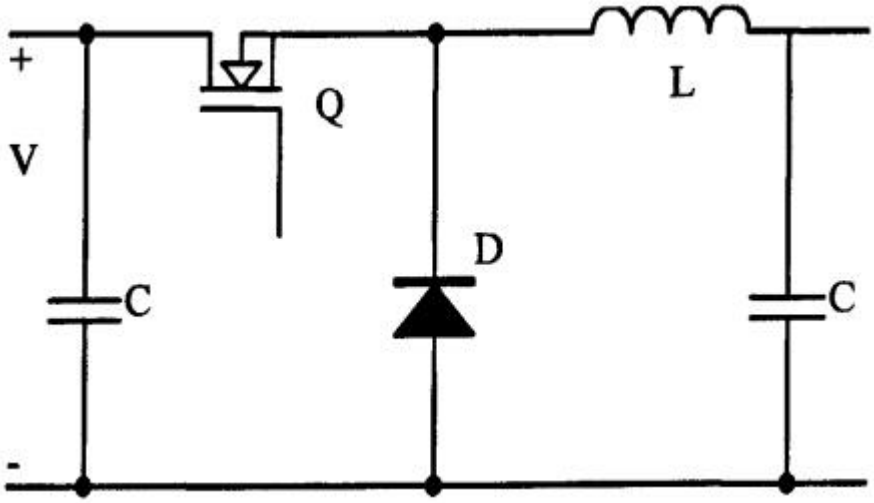

Figure 8. Buck converter (Wang Lingxiang 2006, P39)

According to Figure 8, when the switch Q is turned on, the diode D is turned off. At this time, the wind turbine and solar energy panels produce electrical energy to the load with the inductor. When the switch is off, the inductor releases energy to turn on the diode. The inductor L supplies energy to the load, and make the output voltage polarity remain unchanged and keep it relatively straight. The output voltage of the capacitor C is reduced. A DC-DC converter is equivalent to the load of wind turbines and solar cells, and the load impedance is adjustable. So the output power can reach the maximum by adjusting the load impedance. It is effective use of the wind and sun energy. (Wang Lingxiang 2006, P39)

2.2.5 Inverter

The inverter is a power electronic converter converting DC power into AC power by turn on and turn off semiconductor power switching device. In independent wind-solar power generation systems, the most of the load are AC load, so conversion efficiency and stability of the inverter directly affects the conversion efficiency and stability of the machine. Due to the battery voltage is altering with changing of the charge and discharge state, it requires the inverter can operate in a wide range of DC voltage, and ensure a stable output voltage.

3 Battery charge design of MPPT

MPPT or Maximum Power Point Tracking is algorithm that is included in charge controllers used for extracting maximum available power from PV modules under certain conditions.

3.1 Maximum Power Point Tracking - MPPT

3.1.1 The MPPT principle of the solar cells

Figure 9 shows that A, B and C indicate respectively the operating points of three different loads. Point B corresponds to the maximum power point of solar array, and then the load impedance is R. According to Thevenin's theorem, any combination of batteries and resistances with two terminals can be replaced by a single voltage source and a single series resistor at a certain sunshine intensity and temperature. When the load resistance is equal to the equivalent internal resistance, the solar output power is maximum. (Kong Juan 2008)

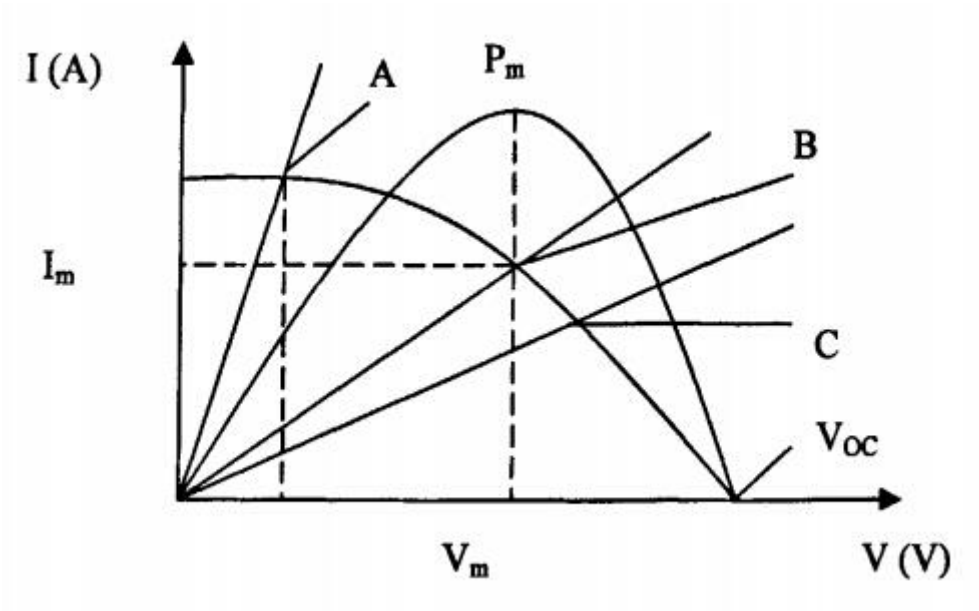

Figure 9. Solar cells working point when takes loads (Kong Juan 2008)

In order to make a solar cells array with any load which is operating at the maximum power point, an impedance transformer must be added between the load and the solar cells array. The equivalent circuit is shown in Figure 10. Assuming the ratio of change is $K = V_{in}/V_o$, the impedance converter efficiency is 1. Then the K can be adjusted so that make $R_L = R_1$ and makes the power output of solar cells reach the maximum. Impedance converter uses Buck DC / DC converter in the design, ensuring the change of the K value by adjusting the switch and achieving maximum power point tracking. (Kong Juan 2008)

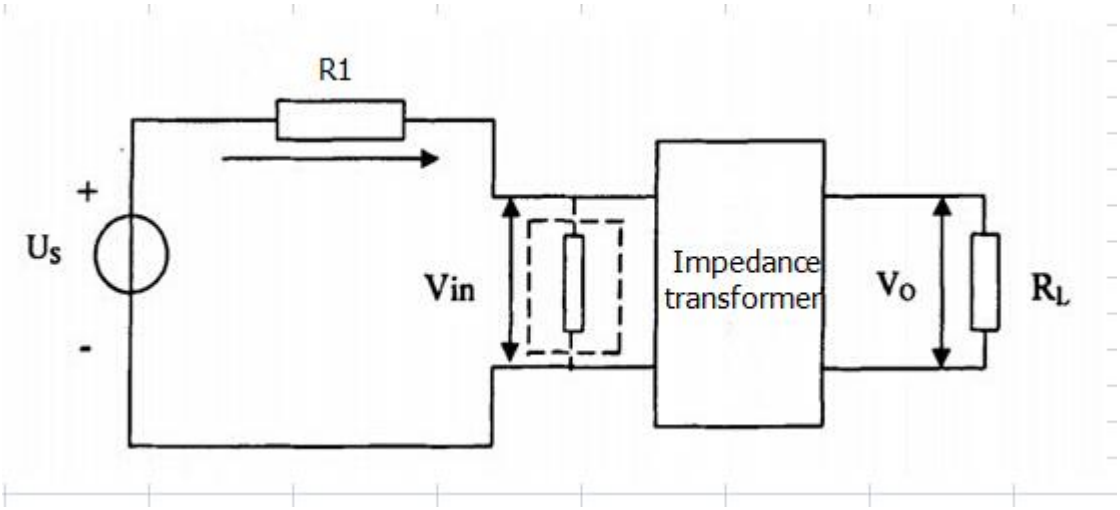

Figure 10. Equivalent circuits of solar cells taking impedance converter (Kong Juan 2008)

3.1.2 MPPT methods

1) The constant voltage method

When the solar cells temperature is constant, the maximum power point is located approximately in a vertical line of U_m. According to Figure 11, intersection A, B, C, D and E of the different characteristics of the solar cells and the load line L are the cur-

rent operating point, but the operating point does not lay the maximum power point of the characteristic curve. In order to improve the utilization of solar output energy, just keeping a constant output voltage of the solar cells equal to the maximum power point voltage U_m, which is the principle of the constant voltage tracking.

The constant voltage tracking method has a high stability, which is easy to implement and control, but the method ignores that the temperature has an influence on the open circuit voltage of the solar cells. It is indicated that the changing of the voltage U_m of the solar cells maximum power point will vary with the temperature of the battery change. The ambient temperature and sunshine temperature have a great impact on the solar cells, so the method cannot completely track the maximum power point of the solar cells array and cause loss of power in seasonal temperature or daily temperature areas. (Xu Pengwei 2007, P41)

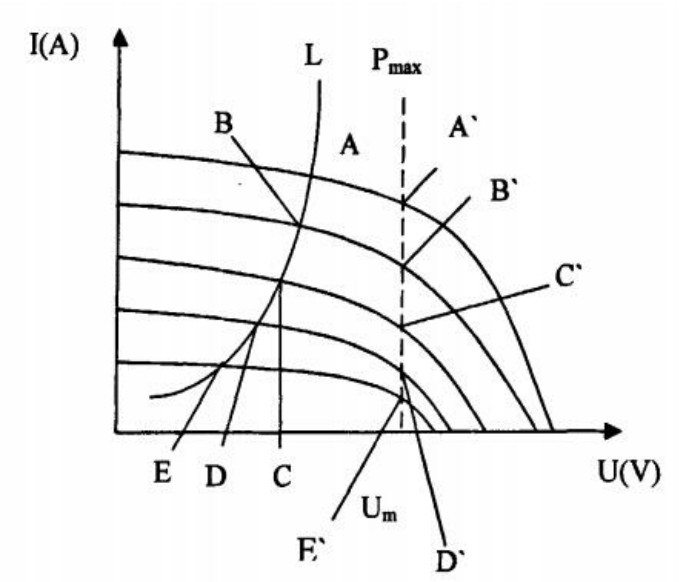

Figure 11. The constant voltage method (Xu Pengwei 2007, P41)

2) Perturbation and observation method

The principle of the perturbation and observation method is shown in Figure 12. The controlled object can be a voltage or current of a solar cell, compared to the output

power of the solar cells array before and after the disturbance periodic. If the output power is increased, it is kept interfering according to the direction of the last periodic. If the output power is reduced, the disturbance direction is changed and the maximum power point is found. The advantages of the method are a simple structure the measured parameters are less, and it is easy to implement. When the solar cells array is operating at the maximum power point in certain period, due to the presence of disturbance, the operating point of the solar cells array will deviate from the maximum power point in next period. So the solar cells are operating in the vicinity of the maximum power point. On the one hand, it is difficult to select the appropriate step size, if the step size is too small to track slowly; if the step is too large, the shock will be more intense at the maximum power point. On the other hand, when the environmental factors are rapidly changing, it is easy to make mistakes and cause the tracking failure. (Xu Pengwei 2007, P42)

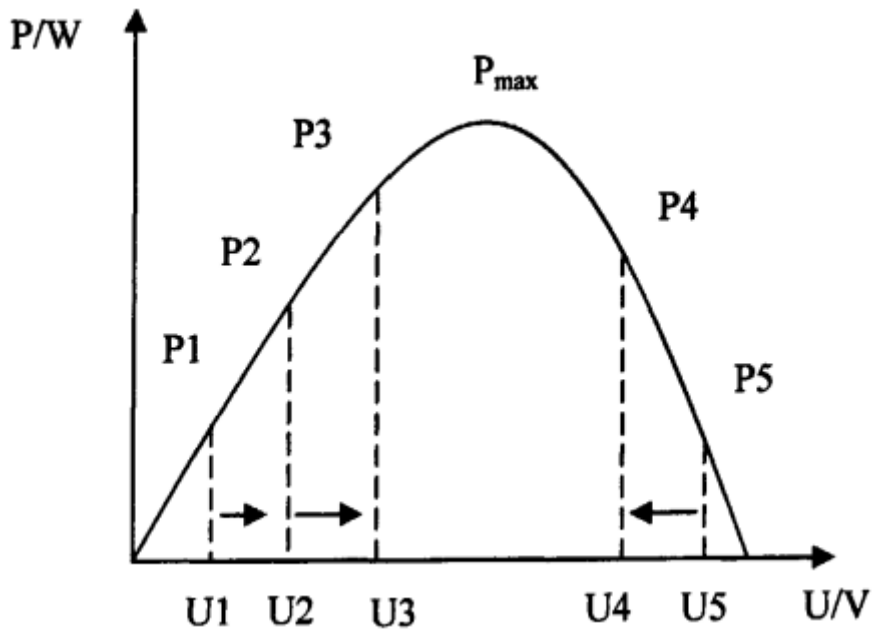

Figure 12. The perturbation and observation method (Xu Pengwei 2007, P42)

3) Incremental and conductance method

To solve the problem of power loss，K. H. Hussein proposed the incremental and conductance method in 1995. As can be seen in Figure 3.4, the slope of the characteristic curve of the solar cells array is zero at a maximum power point, dp/dv = 0,In the formula, P =UI, so dP/dV = I + dI/dV = 0, then dI/dV = -I/V. The judgement condition of maximum power point is that when the changing amount of the output conductance equals to the negative of the output conductance in this formula, it can be considered as a maximum power point. When dI/dV > -I/V, it is depicting that P-V curve slope is greater than zero. This is the basic principle of the incremental and conductance method. The advantages of the incremental and conductance method are: when the external environment changes, the output voltage of the solar cells array can smoothly follow the changes, and the shock of steady-state voltage is also smaller. (Xu Pengwei 2007, P43)

3.1.3 The control solutions of MPPT

Wind turbines and solar cells use the same DC-DC charging control link, it can save costs and the control system and operation system is simple. But using the same DC-DC converter to track the maximum power point of wind power and photovoltaic, this point may not be the optimal operating point of photovoltaic and wind power. However, for small systems within the kilowatt, the economy and simplicity are still very important. As is shown in Figure 13, this is the control solutions used in this thesis.

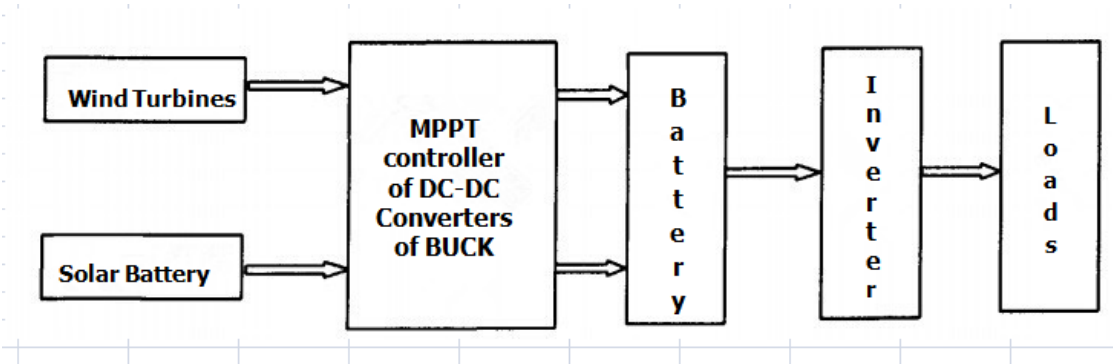

Figure 13. Sketch map of MPPT control of Wind-Solar Hybrid Generation System

3.2 Design of lead-acid battery charger hardware circuit

3.2.1 Battery charger design scheme

The lead-acid battery design program of wind-solar hybrid power generation system is shown in Figure 14. The control chip is TMS320LF2407, which is responsible for controlling the operation of the system. The power switching circuit is a main part of the charger. Peripheral circuits have some important circuits, including current and voltage sampling circuit, power drive control circuit, auxiliary power circuit and so on.(Zhu Rongran 2002, P42)

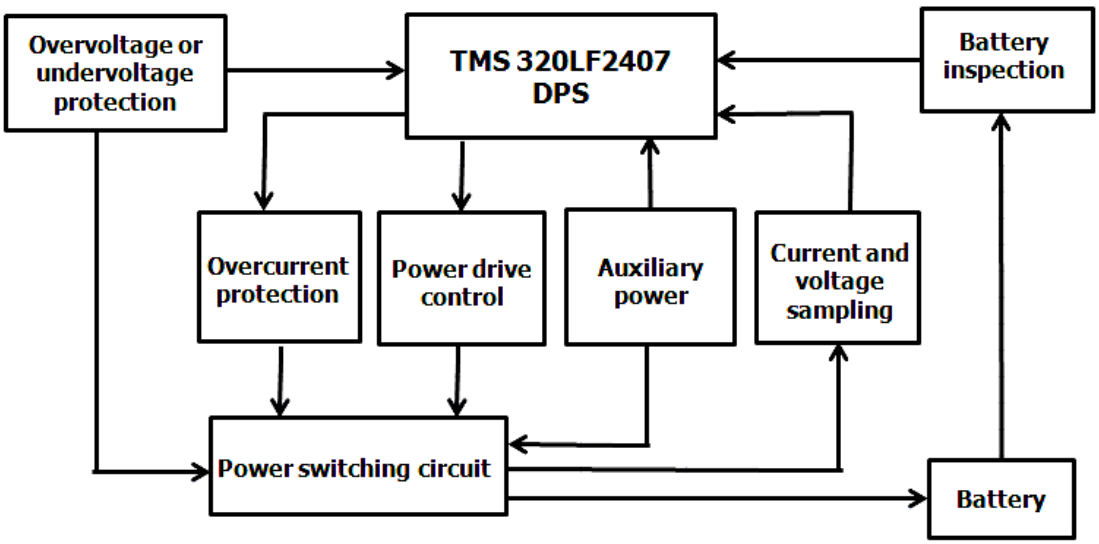

Figure 14. The design chart of Battery charger. (Zhu Rongran 2002, P42)

3.2.2 The main circuit design of battery charger

The main hardware circuit part of battery charger is shown in Figure 15. Three-phase asynchronous motor output interface is U, V and W. After the rectifiers (D1 ~ D6) rectifier to charge the battery, the positive and negative of solar are connecting to SP and SN in Figure 15. The D7 is the diode that is ensuring the unidirectional conductivity of solar cells, at the same time, avoiding the impact of the rectified voltage and battery on solar arrays. D8, R and Q3 are unloading the devices of wind turbines. When the wind generator output DC meet the requirements for battery charging, Q3 is turned off. The direct current after rectification charges the battery by the DC-DC conversion, when the outside wind speed is too high, the wind generator output voltage is greater than the battery charging voltage. The DSP control output pulse is triggering Q3 to open. The unloading effect of the wind generator and to protect the battery. D12 and the fuse F are to prevent the battery reverse connect. When the battery reverse connect, a short circuit loop is constituted by D12. The short circuit current makes the fuse F to be fused quickly and cuts off the circuit, thereby protecting the other components in the charger. The middle part of the main circuit is DC / DC converter of soft-switching technology of Buck-ZCS-PWM type, which is the core part of the charging circuit. (Yan Yangguang 2010, P76)

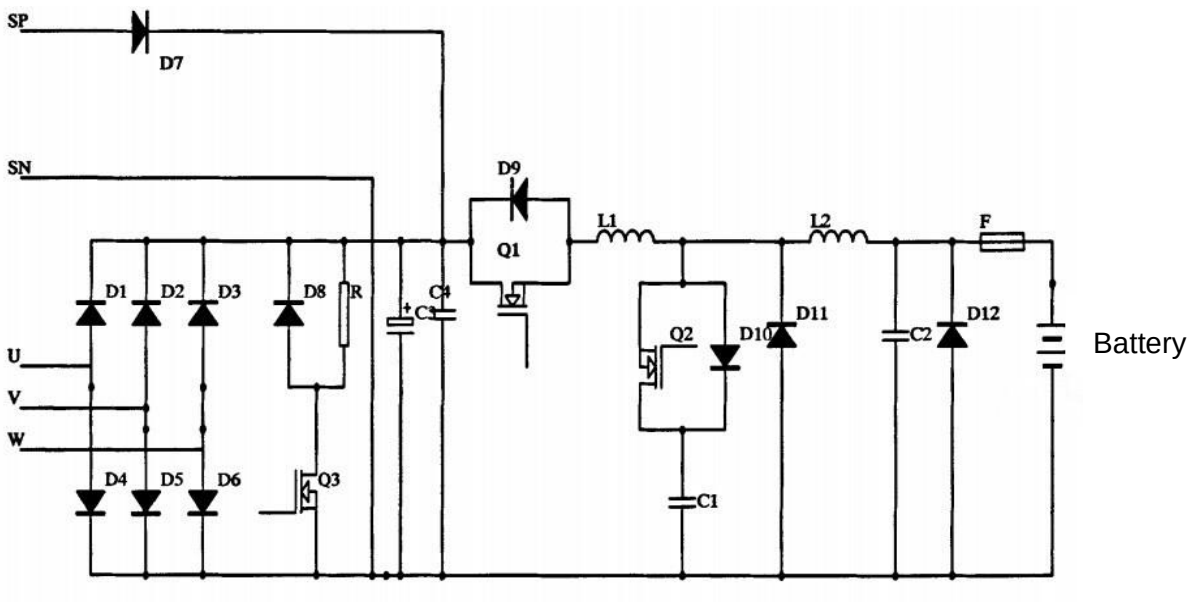

Figure 15. The main hardware circuit diagram of battery charge (Yan Yangguang 2010, P76)

In Figure 15, Q1 is the main switch of zero-current switching PWM converter, Q2 is the auxiliary switch, and D11 is the freewheeling diode. In the wind-solar hybrid power generation system, the control signal of the DC converting circuit is generally provided by the microcontroller or DSP and often using the PWM control. The zero current switching (ZCS) PWM-type converters are used in this paper. (Qin Ling 2007)

1) The circuit analysis

The power waveform of the important device in every time period is shown in Figure 16. The circuit works as follows:

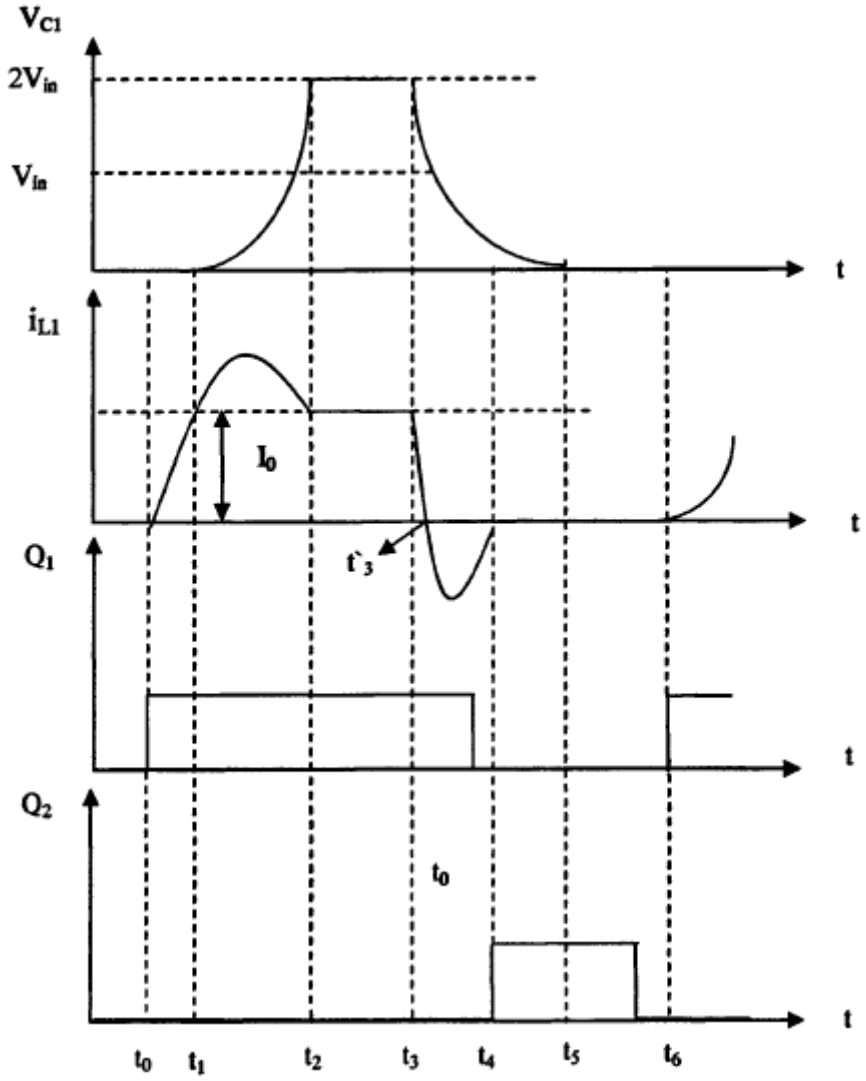

Figure 16. Voltage and current waves(Guo Chengda 2008,P32)

In Figure 15 and Figure 16, assuming the initial time of the main switch Q1 and the auxiliary switching transistor Q2 are in the turn-off state, it is delivered to the current I of the battery from the free-wheeling diode D11, and the voltage of the capacitor C1 is zero. A switching period will start when the main switch Q1 is turned on; there are six time periods in the work process of a zero-current switching PWM type converter as follows:

Ⅰ. The time period 1 [t_0-t_1] — The inductance linear charging mode

At time t_0, the main switch Q1 is turned on, then the inductor L_1 is charged by the output voltage of the wind turbine and the solar cell, i_{L1} is in linear rise, Q1 is turned on by zero current. It is corresponding to the circuit shown in the time period in Figure 17. There are the following formulas:

$$L_1 = \frac{di_{L1}}{dt} = V_{in} \tag{3-1}$$

In the initial conditions: i_{L1} (t_0) = 0, by the equation (3.1):

$$i_{L1} = V_{in}(t_0 - t_1)/L_1 \tag{3-2}$$

When i_{L1} is equal to the output current I_0 at the time t_1, the freewheeling diode D11 is turned off, and this time period ends, but the duration of this time period is:

$$T_1 = t_0 - t_1 = \frac{L_1 I_0}{V_{in}} \tag{3-3}$$

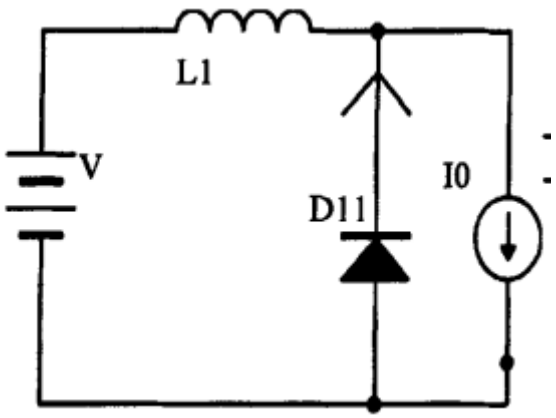

Figure 17. The inductance linear charging mode (Guo Chengda 2008, P34)

Ⅱ. The time period 2 [t_1-t_2] — The resonant capacitor charging mode

At time t_1, i_{L1} is equal to the output current I_0, then the freewheeling diode D11 is turned off, L1 occurs resonant via D10 and C_1. It is corresponding in the time period as shown in Figure 18, which reaches t_2 after half the resonance period, i_{L1} rises to I_0 again by the resonant mode, V_{c1} amounts to $2V_{in}$ via the resonant mode, due to the auxiliary switch Q2 being turned off. So i_{L1} and V_{c1} will remain the value, which cannot

continue to resonate. During this time the following relationship can be presented with the formula:

$$\begin{cases} \frac{C_1 dV_{C1}}{dt} = i_{L1} - I_0 \\ \frac{L_1 i_{L1}}{dt} = V_m - V_{C1} \end{cases} \quad (3\text{-}4)$$

The initial conditions are: $\begin{cases} V_{C1}(t_1) = 0 \\ i_{L1}(t_1) = I_0 \end{cases}$ (3-5)

The solution of equations is:

$$\begin{cases} i_{L1}(t) = \frac{V_{in}}{Z_1 Sin(t-t_1)\omega_1} + I_0 \\ V_{C1}(t) = [1 - cos\omega_1(t - t_1)]V_{in} \end{cases} \quad (3\text{-}6)$$

In the formula, $Z_1 = \sqrt{L_1/C_1}$ is the characteristic impedance of the resonant circuit, $\omega_1 = \sqrt{L_r C_r}$ is the resonance angular frequency of the resonant circuit.

The duration of this time period is: $T_2=t_2-t_1 = \pi/\omega_1$.

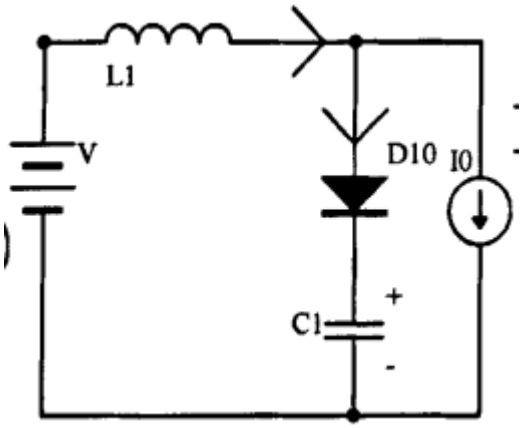

Figure 18. The resonant capacitor charging mode (Guo Chengda 2008,P34)

III. The time period 2 [t_2-t_3] — The inductance constant current mode

At time t_2, the inductor current i_{L1} reaches I_0. If the auxiliary switch Q2 is turned on at this time, L1 and C_1 will continue on the resonance, but C_1 will be in a discharged state. Before Q2 is not turned on, I_0 can be maintained to equal to i_{L1}, Vc1 will remain the maximum $2V_{in}$. The circuit is operating in a standard PWM mode during the time period as shown in Figure 19. The duration of this time period is $T_3 = t_3-t_2$. It depends on the PWM control of the output.

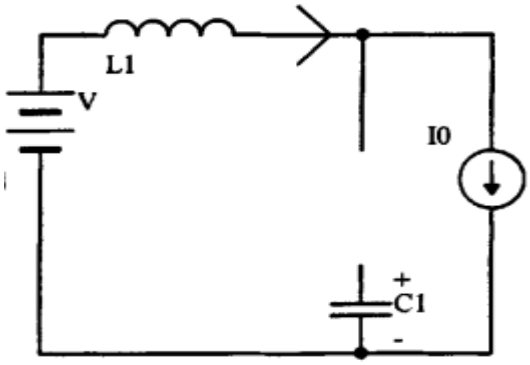

Figure 19. The inductance constant current mode (Guo Chengda 2008,P35)

Ⅴ. The time period 4 [t_3-t_4] — The resonant capacitor discharge mode

At time t_3, when the current is zero, the auxiliary switch Q2 is opened. Then the inductance L_1 and C_1 can resonance again as in Figure 20.The current of L_1 and the voltage of C_1 can be expressed as in Formula 3.10.

$$i_{L1}(t) = I_0 – V_{in}*\sin\omega_1(t-t_3) \quad (3\text{-}7)$$

$$V_{c1}(t) = V_{in}[1+\cos\omega_1(t-t_3)] \quad (3\text{-}8)$$

At time t_3, the inductor current i_{L1} resonance will decay to zero in the positive direction. Then D9 is turned on, and i_{L1} will continue on resonance in the opposite direction through D9. At time t_4, the inductor current i_{L1} resonance will decrease to zero in the reverse direction, the time period is over. It is obvious that when i_{L1} is operated in the opposite direction during (t_3-t_4), the main switch Q1 can complete the shutdown process at zero voltage and zero current. The duration of this time period is:

$$T_4 = 1/\omega_1*[\pi-\sin^{-1}(Z_1 I_0/V_{in})] \quad (3\text{-}9)$$

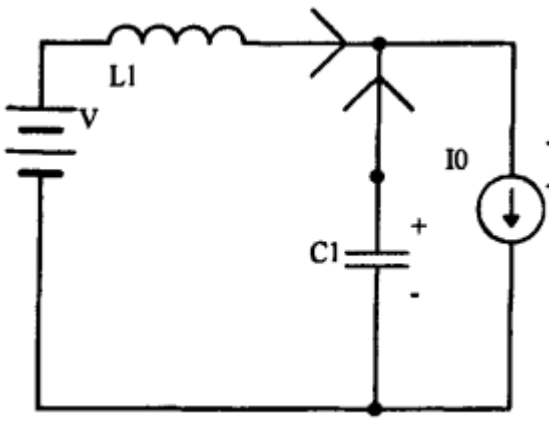

Figure 20. The resonant capacitor discharge mode (Guo Chengda 2008,P34)

Ⅵ. The time period 5 [t_3-t_4] — A linear discharge mode of capacitor

In this time period, the capacitor C_1 will discharge under the action of output current I_0. At time t_5, V_{c1} decays to zero, then the freewheeling diode D11 will be turned on as shown in Figure 21, the resonant capacitor C_1 voltage is expressed as in the following formula:

$$V_{c1}(t) = V_{c1}(t_4) - I_0*(t-t_4)/C_1 \quad (3.10)$$

The duration of this time period is: $T_5 = C_1*V_{c1}(t_4)/I_0$

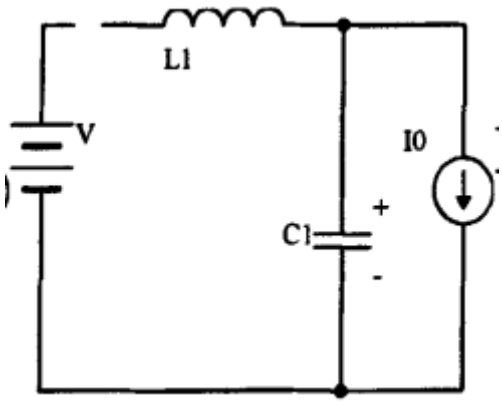

Figure 21. A linear discharge mode of capacitor (Guo Chengda 2008,P35)

Ⅶ. The time period 6 [t_5-t_6] — A free-wheeling mode

At time t_5, V_{c1} decays to zero, and the freewheeling diode D11 is turned on. In this time period, the circuit will operate in a standard PWM mode until time t_6, the new

switching cycle begins. The length of this time period, depending on the constant frequency, PWM control requires the circuit output, as shown in Figure 22.

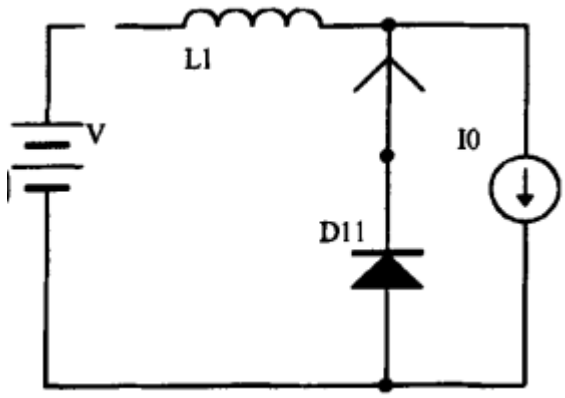

Figure 22. A free-wheeling modes (Guo Chengda 2008,P36)

2) The resonant parameter calculation

The zero shutdown condition of a ZCS-PWM converter main switch is that the resonant inductor current must be able to return to zero, as can be gotten the follow formula from the formula 3.7:

$$\frac{V_{in}}{Z_r} > I_{0max} \tag{3-11}$$

In the formula, I_{0max} is the maximum output power, so $Z_r < V_{in}/I_{0max}$. Then the equation rewritten as:

$$Z_r < K_c V_{in}/I_{0max} \tag{3-12}$$

In formula, $K_c < 1$, Assuming $K_c = 0.8$.

In order to reduce the resonant inductance and resonant capacitance effects on PWM control, it will decrease the resonance working time or decrease the resonant period T, and improve the resonance frequency f_1. The relationship between the formula of the resonant frequency and the switching frequency is:

$$f_1 = N * f_s \tag{3-13}$$

where N is generally ranging from 4 to 10, assuming N=6 in this design.

The formula of the resonant frequency is:

$$f_1 = 1/2\pi\sqrt{L_1 C_1} \tag{3-14}$$

It can determine the values of L_1 and C_1:

$$L_1 = \frac{Z_1}{2\pi f_1} = \frac{K_c V_{in}}{2\pi N I_{omax} f_s} \tag{3-15}$$

$$C_1 = \frac{1}{2\pi Z_1 f_1} = \frac{I_{omax}}{2\pi N K_c f_s V_{in}} \tag{3-16}$$

In this design, the battery float current is 3A, the maximum charging current is 60A, and so I_{omax} is 60A. Switching frequency f_s is 20KHZ, wind turbine output voltage is 56V, solar photovoltaic array operating voltage is 33V, and the whole ZCS-PWM converter input voltage is 33V ~ 56V. So V_{in} is 33V. After calculations, L_1 is about 5.8 H and C_1 is about 3μF.

4 Design of the inverter

An inverter is an electronic device or circuitry that changes direct current (DC) to alternating current (AC). The input voltage, output voltage and frequency, and overall power handling depend on the design of the specific device or circuitry. The inverter does not produce any power; the power is provided by the DC source.

4.1 The main hardware circuit design of inverter

There are three kinds of forms of inverter circuit structure: a full-bridge inverter, a half-bridge inverter and a push-pull inverter. The main circuit of the inverter using the full-bridge circuit in the design is shown in Figure 23. The turn-off voltage of the circuit power device is low, and the output waveform is good.

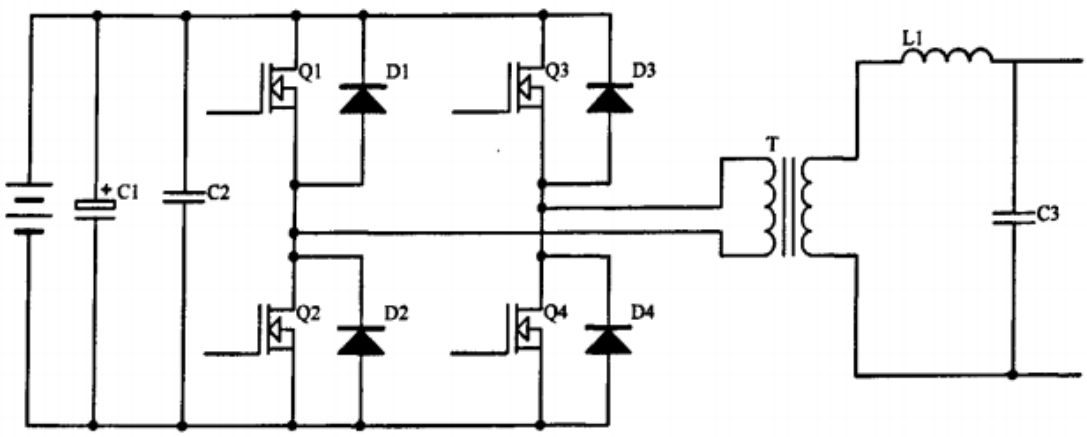

Figure 23. The main hardware circuit of inverter (Zhang Xinlei 2006, P38)

The main circuit consists of a 24V battery, a large capacitance, a one-way inverter bridge, power frequency transformer, an LC filter and so on. In Figure 23, C1 is a smoothing capacitor of DC side, which is used to reduce high frequency pulsating of DC links. When the load switch is switched, it can storage inductor current of the

feedback in short-term and suppress overvoltage condition. In the high-frequency inverter circuits, the equivalent impedance of electrolytic capacitor have an influence on the energy absorption of the switch current, so the high frequency non-polar capacitor C2 is paralleled in C1 side. Q1 ~ Q4 is a single-phase inverter. T is the frequency transformer, L1 and C3 are the LC filter circuit. (Zhang Xinlei 2006, P38)

4.2 AC sampling circuit design

In an inverter system, the sampling circuit comprises AC voltage and AC current sampling circuit. The sample values are sent to the A / D converter module of DSP, Through the DSP's internal computing it can be achieved over-current and overvoltage protection, but also the output waveform of the inverter can be adjusted. AC voltage sampling circuit is shown in Figure 24. the AC voltage is sampled by the precision of an AC voltage sensor, and the sensor plays a good role in voltage isolation, it can effectively isolate the AC components and DSP and avoid the interference. (Liu Jun 2008, P28)

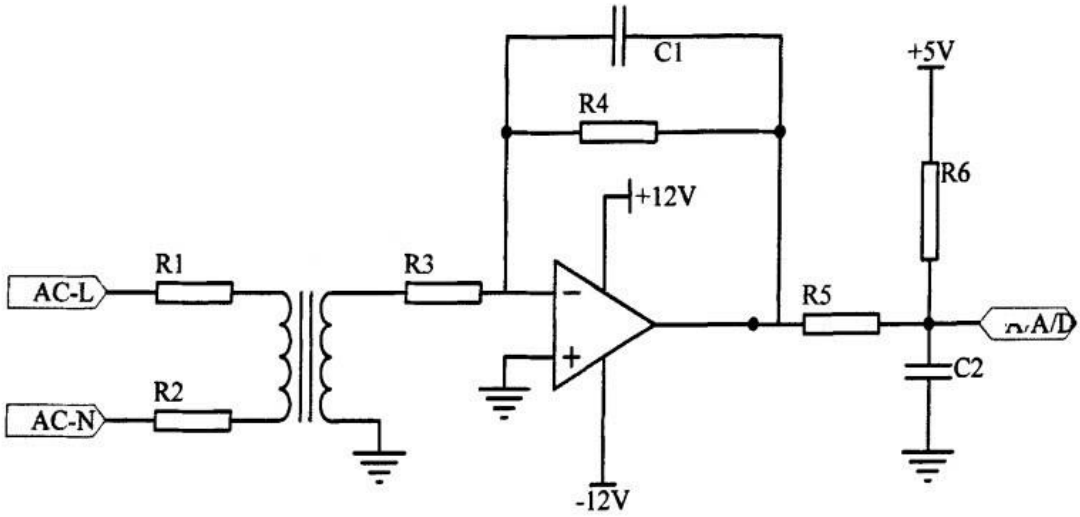

Figure 24. The AC voltage sampling circuit (Liu Jun 2008, P28)

The AC current sampling circuit includes an inverter current detection and over-current protection circuit. As the upper part of Figure 25 shows, the load current is sampled by high-precision current sensor, which is sent to A / D port of DPS after through an appropriate transformation and has some corresponding computing, mostly the inverter output current detection circuit. The rest of it is over-current protection circuit. The output of over-current protection circuit is connected to the DSP's I / 0 port, when the level value of the port becomes high, DSP stops outputting SPWM pulse, the system is down and waits for maintenance. (Liu Jun 2008, P28)

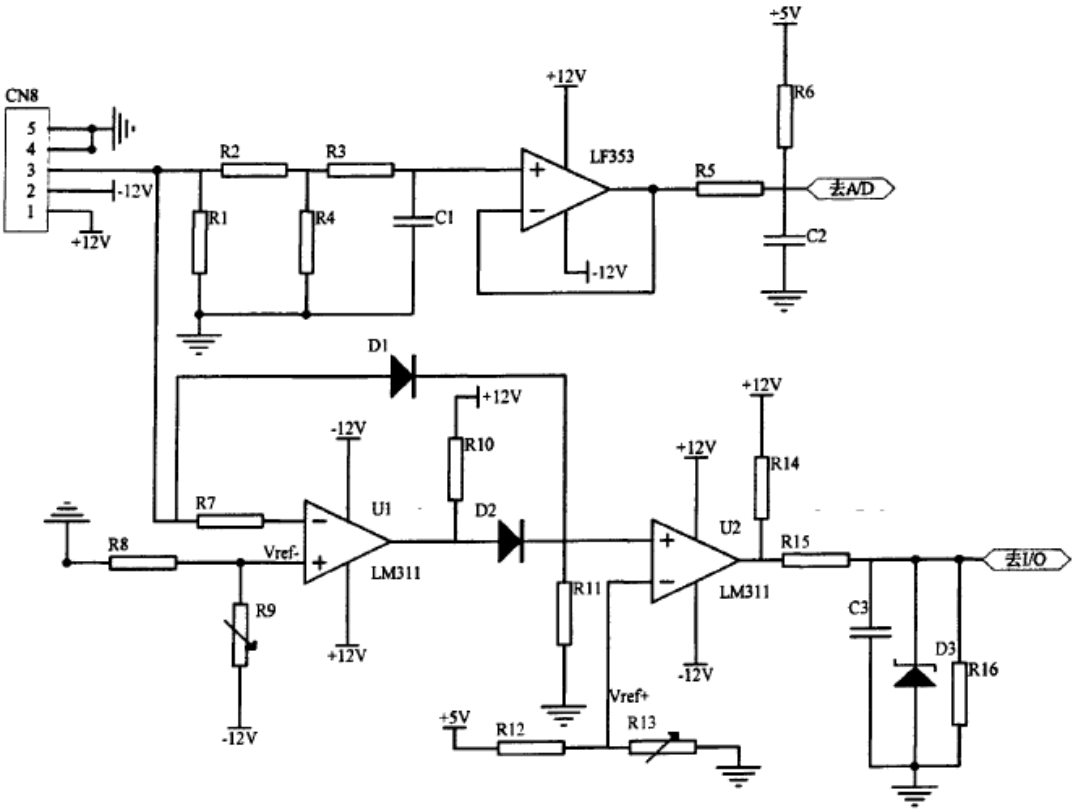

Figure 25. AC current sampling circuit (Liu Jun 2008, P28)

4.3 PWM signal generation condition of the inverter

4.3.1 The basic principle of SPWM control

In Figure 26, the half-wave of sine wave is composed by N contiguous pulses. The width of these pulses is equal, but the amplitude is not equal, and the top of the pulse is a curve. Each pulse amplitude change with sine rule. If rectangular pulse sequence of the same number of equal amplitude and not equal width instead of the above pulse sequence, then each pulse width and interval are calculated, and made the focus of the rectangular pulse and the midpoint of corresponding sine aliquot to overlap. The area of rectangular pulse is equal to the area of the corresponding sine part, as shown in Figure 26. The continuous pulse is equivalent to sine wave. This is SPWM (Sinusoidal Pulse Width Modulation) waveforms. (Pengky, 1)

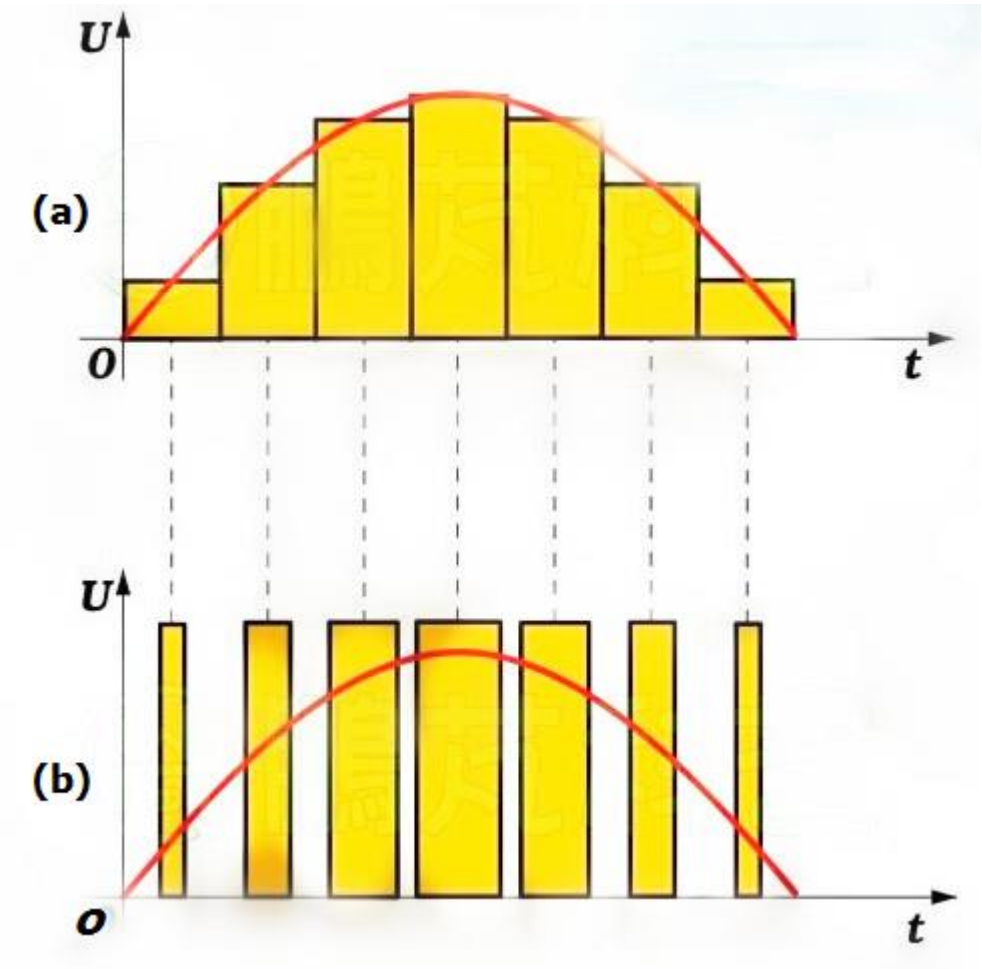

Figure 26. Basic schematic of SPWM control (Pengky, 1)

SPWM inverter circuit operating principle is this: the controller (TMS320LF2407) produces the control pulse of single-phase SPWM. After driving circuit, the main control switch Q1 ~ Q4 is off, and the DC voltage inverter changes it to AC voltage and after through the filter circuit, it can meet the requirements of a sinusoidal AC voltage supplied to the load.

4.3.2 The control and modulation scheme of SPW

There are two control modes of SPWM, namely monopole control and bipolar control. The waveform is shown in Figure 27 and Figure 28. Two control methods have the same modulation method. The value and frequency of the output voltage are also changed according to the magnitude and frequency of the sinusoidal reference signal change, but turn on and off of the power switching device is different. When the system uses the monopole control, it has only one switch device turn on turn off in a half cycle of the sine wave. When the system uses the bipolar control, which has two switching devices alternately turn on and turn off in the same bridge arm of inverter, this is a complementary way to work. The control rules of two ways are different. In this paper, the wind-solar uses the monopole PWM control mode. (Wang Yaobei 2007, P37-40)

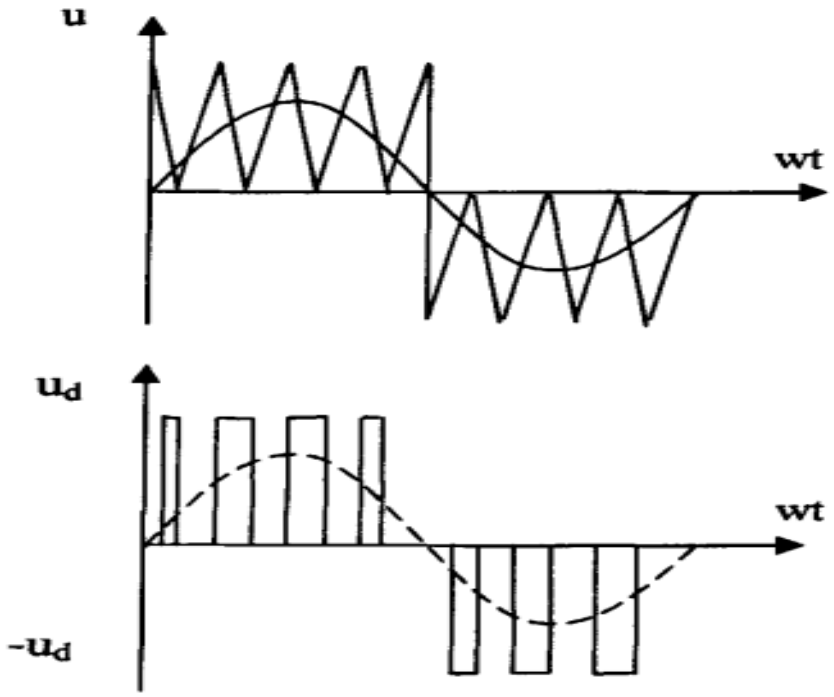

Figure 27. Monopole controls (Wang Yaobei 2007, P37-40)

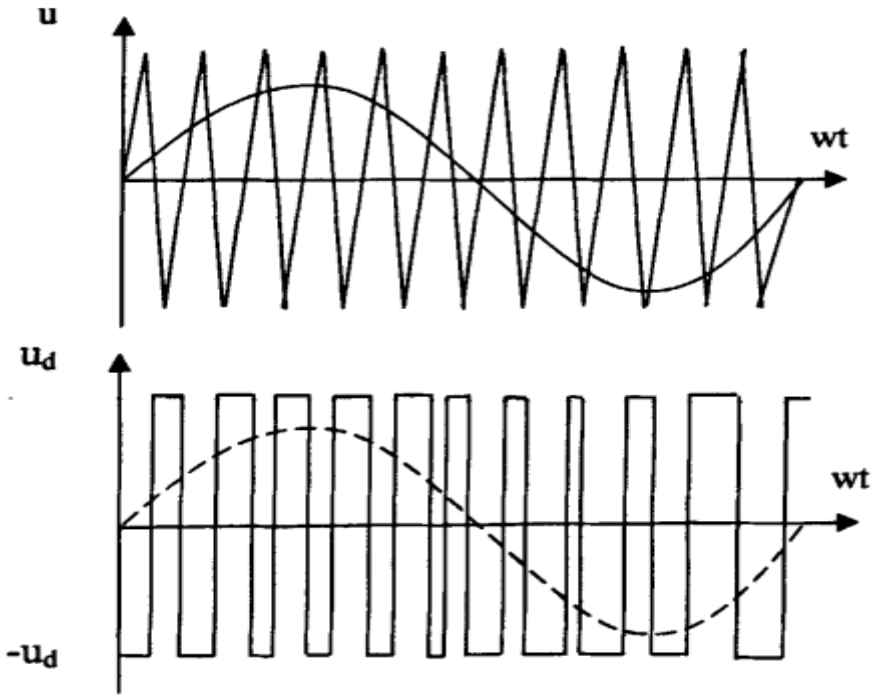

Figure 28. Bipolar controls (Wang Yaobei 2007, P37-40)

The ratio of the carrier frequency f_c and the modulation frequency f_r is N, so N= f_c/f_r. According to whether N changes or not, it can be divided into synchronous modulation and asynchronous modulation. In synchronous modulation, the carrier ratio is constant; a rectangular pulse of the inverter output voltage wave is unchanged. In asynchronous modulation, the carrier ratio is not constant. In a certain frequency range, the advantages of the output waveform symmetry is kept by using synchronous modulation, when the frequency is reduced for increasing the carrier ratio, it can adopt asynchronous modulation. Selecting synchronous modulation is to ensure the symmetry of the output waveform in this design. (Wang Yaobei 2007, P37-40)

5 The main system software design

The control program design of the controller adopts modular programming design method, which is divided into several independent modules, including the main program module, the interrupt service routine modules, sub-modules and so on. The main program mainly completes the system initialization and man-machine interface functions, the interrupt service routine completes the real-time control functions.

5.1 The choice and design of the chip

In the system, the controller chip will use TMS320LF2407 digital signal processor of TI Company. There are some following characteristics of the chip:

1) High-performance CMOS technology. The supply voltage is 3.3V, reducing the power consumption of the controller. The execution speed is 30MIPS making instruction cycle shortened to 33ns (30MHZ), thereby improving the real-time control of the controller
2) Chip has 32K words of FLASH program memory and 1.5K words of data / program RAM, 544 word dual-port RAM (DARAM) and 2K words of single-port RAM (ShRAM)
3) Expansion of external memory space is 192K words; 64K words of program memory space; 64K words of data memory space; 64K word I / O address space
4) 5 external interrupts (two motor drive protection, reset and two mask able interrupts).

The wind-solar power generation system is a real-time control system, which has a high requirement for the computing speed of a system processor. The controller chip (TMS320LF2407) is used in this design, as it can meet the conditions. In the software

design process, a software program written in assembly language is used to improve the execution speed and meet the real-time requirements of the system.

5.2 Battery Charger program modules

The main program flow chart of a battery charger program module is shown in Figure 29. When the DC voltage is greater than the battery charging voltage, the overvoltage protection program will take unloading operations for wind turbines and solar cells, and protect the battery. But when the DC voltage is less than the lower limit value of charging voltage, at this time, the battery voltage is greater than output voltage of the wind turbines and solar, using the under-voltage protection program to take unloading for wind machine and prevent battery reverse charging. However, solar cells do not need to take unloading. What is more, the battery terminal voltage is sampled. If the current voltage is less than the charge voltage set-value, then the charge control sub-routine is used to charge the battery. (Lu Zhiguo 2009, P50)

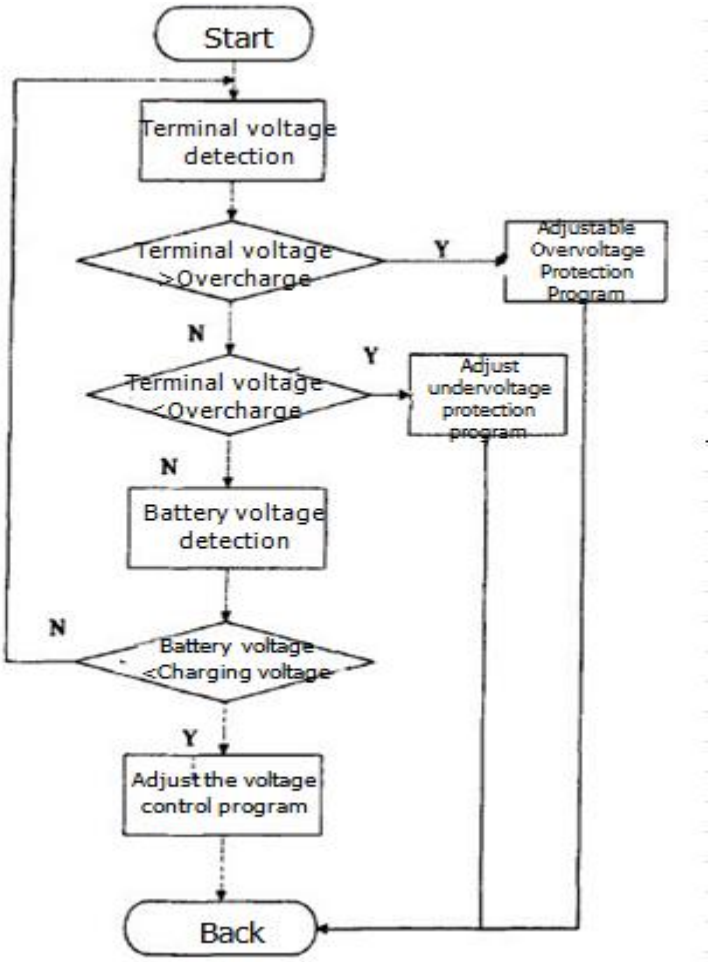

Figure 29. The main flow chart of battery charger (Lu Zhiguo 2009, P50)

The flow chart of the charge control subroutine is shown in Figure 30. When terminal voltage is less than threshold voltage, it can use the maximum power point tracking program to find the maximum power point of the system, then using the current of the maximum power point to charge the battery. As the charging continues, the battery terminal voltage rises, until the terminal voltage is greater than the threshold voltage, it can be charged for battery by the limit current. By adjusting the duty ratio of the power switch to gradually reduce the charge current until the charging current reaches the float current value, the charging of the second phase is over. At this point, the battery has been basically full. To prevent battery discharge, the terminal voltage is kept within a certain range. In the meantime, the use of float current is made to trickle

charge the battery until battery power is lost and it enters the next charging cycle. (Lu Zhiguo 2009, P51)

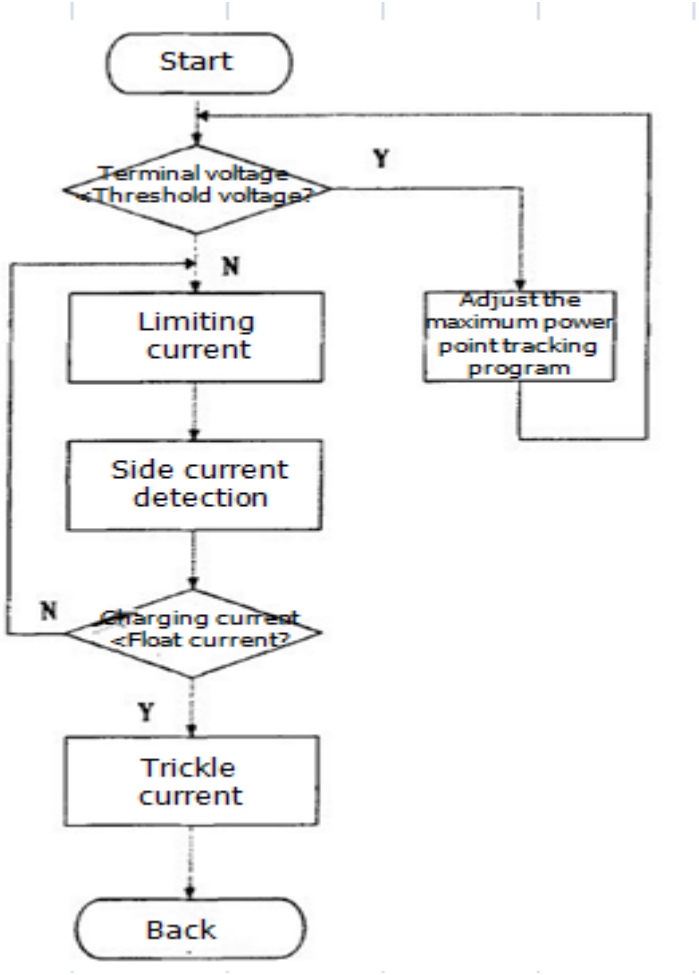

Figure 30. Subroutine flow chart of charging control method (Lu Zhiguo 2009, P51)

5.3 Inverter control module design

A modern inverter system is also a control system, which can change the output of the inverter system by adjusting one or several reference values. When the output voltage and load changes, the output of an open-loop inverter system have no stabilizing effect. The voltage control is poor, so the modern inverter system is generally closed-loop control systems. The main program of the inverter control system is mainly complete over-current and under-voltage signal monitoring and waiting for an

interruption. Then it is transferred to the corresponding handler according to system status, completing the normal work of the inverter system. The flow chart is shown in Figure 31. (Lu Zhiguo 2009, P52)

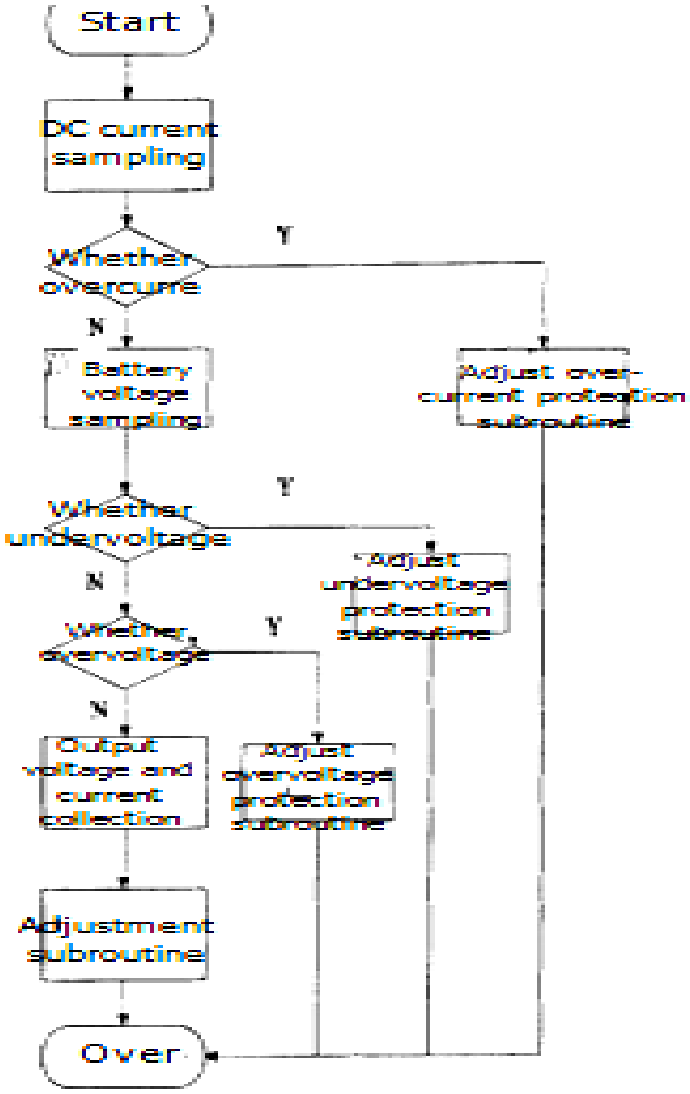

Figure 31. The flow chart of main program (Lu Zhiguo 2009, P52)

6 Summary

In this design, on the basis of the operation of wind-solar hybrid power generation system, the battery charger of the energy conversion system and inverter were studied. In order to improve the operating frequency of the power switch and reduce the devices volume and power consumption, the soft-switch technology was applied to the battery charger, and the charger was designed with maximum power point tracking function. In the design of the inverter, the SPWM modulation techniques were used. Meanwhile, the entire system control chip TMS320LF2407DSP of TI Company was used, and the system functions were merged and the main software programs were designed.

In wind-solar hybrid power generation systems, energy conversion system is the core part of the whole system. It includes aspects of energy storage and energy conversion sectors. Energy storage aspect is to ensure that there is balance between energy supply and the demand of the entire system. The current study is the use of chemical energy storage methods, namely, battery energy storage. Energy transformation refers to the inverter; the DC power was converted into AC power and supplied to the loads in the process of energy storage.

With the development of economy and technology, renewable energy will become an important part of the energy sector in the future, and wind-solar hybrid power generation system with its unique advantages will occupy an important place in the new energy sector. With the development of power electronics technology, the miniaturized device, digital equipment, automation equipment will also become one of the development directions of the wind-solar hybrid power generation system, and the wind-solar system will be widely used in the future.

REFERENCES

Literature

Zhou Yuzhu.2007.Development of wind-solar hybrid power system inverters. China: Anhui University

Zhu Zhao & Zhu Changhan.2005 Chinese solar energy and wind energy resource utilization. China: Meteorological Press

Wang Yu. 2010. Research and development of wind-solar power generation system. China: Tianjin University

Li Shuang.2005. The optimization design of wind-solar hybrid power system. China: Beijing Publishing House

A.N.Celik.Optimization.2002.Techno-economic analysis of autonomous photovoltaic-wind hybrid energy systems in comparison to single photovoltaic and wind systems. Energy Conversion and Management

Xu Daping.2011. The principle of wind power generation. China: Machinery Industry Press

Wang Junyi.2007. Utilization technology of solar energy. China: Golden Shield Press

Zhu Songran.2002. Lead-acid battery technology. China: Machinery Industry Press

Wang Lingxiang.2006. DC-DC converters research of photovoltaic power. China: Hefei University of Technology

Kong Juan. 2008. Research on solar power systems. China: Qingdao University

Xu Pengwei.2007. Several methods of analysis and improvements of PV system MPPT. China: Power Electronics Technology

Yan Yangguang.2010.The soft-switching technology of DC switching power supply. China: Science Press

Qin Ling.2007. The new ZCS-PWM switching unit study. China: Nanjing University of Aeronautics and Astronautics

Guo Chengda.2008. Wind-solar power energy conversion systems research. China: Dalian University of Technology

Zhang Xinglei. 2006. Off-grid households with fully digital inverter wind-solar power generation systems research. China: Nanjing Agricultural College

Liu Jun.2008. Development of DSP inverter. China: Nanchang University

Wang Yaobei.2007. Sine wave inverter control software design. China: Foreign electronic components

Lu Zhiguo.2009. Computer simulation technology of battery. China: Science Press

Internet resource

[W1] Figure 2.4 and Figure 2.5, [Read 08.10.2014].Available:

http://ele-tech.com/html/the-solar-energy-led-street-lamp-control-device-based-on-one-chip-computer-designs.html

[W2] Figure 4.4 Basic schematic of SPWM control, [Read 12.10.2014]. Available: http://pengky.cn/tyn-guangfu/03-spwm-nbq/spwm-nbq.html