VAASAN AMMATTIKORKEAKOULU
VASA YRKESHÖGSKOLA
UNIVERSITY OF APPLIED SCIENCES

Mikko Kaarakainen

SPARE PART OPTIMIZATION FOR W32 FUEL INJECTION EQUIPMENT

Wärtsilä Technical Service W32 Department

School of Technology
2015

VAASAN AMMATTIKORKEAKOULU
Kone –ja tuotantotekniikan koulutusohjelma

TIIVISTELMÄ

Tekijä	Mikko Kaarakainen
Opinnäytetyön nimi	Varaosa optimointi W32 moottorin ruiskutuslaitteistolle
Vuosi	2015
Kieli	Englanti
Sivumäärä	62 + 2 liitettä
Ohjaaja	Lotta Saarikoski

Wärtsilä 32 moottorin ruiskutuslaitteistoa on kehitetty vuosien varrella todella paljon. Kehityksestä on seurannut suuri määrä erilaisia ruiskutuspumppu, - sekä venttiili malleja. Tämän työn tarkoituksena on selvittää onko näiden vanhentuneiden mallejen varaosia mahdollista poistaa käytöstä ja näin optimoida varaosa kantaa.

Tässä työssä käytettiin tutkimustietona Wärtsilän SAP-järjestelmää, teknisen huollon sisäistä dokumentaatiota sekä kollegoiden tietotaitoa. Työ alkoi tietokannan seulonnalla. Tämän jälkeen paneuduttiin ruiskutuslaitteiston kehitykseen ja muutoksiin, jonka perusteella korvausketjut tarkastettiin ja päivitettiin. Tietojen keruun jälkeen laskettiin vanhojen varaosien vuotuiset varastointikustannukset, sekä ruiskutuslaitteiston huoltokustannuksia vertailtiin päivityskustannuksiin. Viimeisenä etsittiin piraattiosien valmistajia/jakelioita internetistä.

Työn tuloksena kehitettiin kolme varaosaoptimointisuunnitelmaa ruiskutuspumpuille, kaksi varaosaoptimointisuunnitelmaa ruiskutusventtiileille, luotiin kaksi uutta korvausketjua, sekä päivitettiin sisäistä dokumentaatiota ruiskutuslaitteistosta.

Osa työstä on Wärtsilän toiveesta julistettu salaiseksi.

Avainsanat ruiskutuslaitteisto, ruiskutuspumppu, ruiskutusventtiili, varaosaoptimointi

VAASAN AMMATTIKORKEAKOULU
UNIVERSITY OF APPLIED SCIENCES
Kone –ja tuotantotekniikan koulutusohjelma

ABSTRACT

Author	Mikko Kaarakainen
Title	Spare Part Optimization for W32 Fuel Injection Equipment
Year	2015
Language	English
Pages	62 + 2 Appendices
Name of Supervisor	Lotta Saarikoski

This thesis was made for the Wärtsilä Technical Services W32 department. The rapid development of injection pumps and injection valves has resulted in numerous models; therefore lots of different spare parts are needed. The purpose of this thesis was to find a way to optimize spare parts for W32 conventional injection equipment.

Information for this thesis was gathered from SAP, internal documentation and from coworkers. The work of this thesis was started by screening the database. After that the design and development of injection equipment were studied. Based on the design and development research, replacement chains were updated. Based on the previous work, service cost calculations were done by comparing overhauling costs and by calculating inventory costs for old spare parts. Finally, the search of the non-OEM part sellers on the Internet was done.

As a result, three different optimization plans for injection pumps and two for injection valves were developed, two new replacement chains were created and internal documentation was updated.

Part of this thesis is declared secret.

Keywords Injection Pump, Injection Valve, Spare Part optimization

CONTENTS

LIST OF FIGURES

LIST OF TABLES

LIST OF ABBREVATIONS

Rpm = Rounds per minute

IMO Tier II = emission standard II

cST = kinematic viscosity

SFOC = specific fuel oil consumption

HFO = heavy fuel oil

LFO = light fuel oil

W32 = Wärtsilä engine type 32

W32GD = Wärtsilä gas diesel engine type 32

W32E = Wärtsilä 32 engine E type (latest design)

MD valve = main delivery valve

CP valve = constant pressure valve

EPN = extended part number

EOL = end of life notice

QTY = quantity

OEM = original equipment manufacturer

Pcs = pieces

Pc = piece

1 INTRODUCTION

1.1 Purpose

This thesis was done for and under supervision of Wärtsilä Technical Services, W32 department. The rapid development of injection pumps and injection valves has resulted in numerous models; therefore lots of different spare parts are needed. The purpose of this thesis was to find a way to optimize spare parts for W32 conventional injection equipment.

This thesis is important for Wärtsilä Technical Services because this subject has not been looked into that deep and there is no accurate knowledge about the real situation in the field. Neither is there accurate knowledge about spare parts sales or need for old injection equipment.

The outcome of this thesis is: a plan according to which spare parts can and should be phased out, an update for replacement chains if necessary, a bulletin proposal if necessary, an analysis of pump overhaul costs and finally updated internal TS documentation.

1.2 Frame and Structure

This thesis is limited to include only conventional injection equipment, priority in injection pumps. The frame, instructions and outcome for this thesis have been defined and specified by Wärtsilä. The deadline for this thesis is set to be at the end of April.

The structure of this thesis is as follows: In the second chapter the company is briefly introduced. The third chapter introduces the W32 engine, its fuel system, main components and their functions. Chapters 4 and 5 are theoretical chapters about obsolescence and inventory costs. Chapters 6 and 7 explain the research, results and proposals for spare part optimization. Chapter 8 is the summary for the thesis.

2 WÄRTSILÄ

2.1 Wärtsilä in General

Wärtsilä is a Finnish engineering industrial company that was established in 1834. It started as a small sawmill but grew over the years to a huge global company. Along the road it has also worked in shipbuilding, paper, machine, lock, ceramic and glass industry. Nowadays Wärtsilä is a world leading company in ship power and power plant business.

Wärtsilä is divided in three core business areas: Ship Power, Power Plants and Services. Ship Power (marine) provides engines and generating sets, reduction gears, propulsion equipment, control systems and sealing solutions for all types of vessels and offshore applications. Wärtsilä Power Plants offers power plants for base load, peaking and industrial self-generation purposes as well as for the oil and gas industry. Services support the client's installations through their whole life cycle. /1/

Wärtsilä key figures in 2013 (2012):

- Net sales EUR 4,654 million (4,725)
- Operating result EUR 552 million (515)
- Order intake EUR 4,872 million (4,940)
- Order book 31 Dec 2013 EUR 4,426 million (4,492)
- Personnel 18,663 (18,887)

2.2 Services

Wärtsilä Services main purpose is to maintain the customer's installations running all the time. It offers service, maintenance and training for Power Plants and Ship Power. Services offer also reconditioning of old products and parts. The Services cover nearly 40% of annual net sales.

"In parallel with its main service operations Wärtsilä has launched innovative new services that support its customers' business operations, such as service for multiple engine brands in key ports, predictive and condition based maintenance, and training/1/".

2.3 Technical Service

Technical Services experts provide technical support for internal and external customers. Technical service is divided into departments/groups according to the engine models and types e.g. W20, W32, W34, W46 and W50. Product groups provide detailed product know-how regarding technical properties, performance, design and design development.

Technical service is responsible for field tests related to product developments, initiator and maker of service bulletins, support network technical service and regional sales on the technical side and it participates in sales promotion work and as lecturers in product related international seminars. /2/

3 FUEL SYSTEM

3.1 Wärtsilä 32 Engine

The predecessor of the Wärtsilä 32 engine was the Vasa 32 engine, which made a long and rewarding career. The production of the W32 engine started in Vaasa in 1995. W32 is used in ships as a main engine or as a back-up engine. It is also used in power plants as an engine-generator set.

W32 is a four stroke medium speed engine 720-750 rpm. Its name comes from the piston diameter which is 320 mm; stroke is 400 mm and displacement 32,2 L/cylinder (Table 1.). W32 is available in a line engine with 6, 7, 8 and 9 cylinders and in a V engine with 12, 16, 18 and 20 cylinders. /3/

Table 1. Technical data of W32 engine D version /3/.

Wärtsilä 32, D version			IMO Tier II
Cylinder bore	320 mm	**Fuel specification:**	
Piston stroke	400 mm	Fuel oil	700 cSt/50oC
Cylinder output	500 kW/cyl		7200 sR1/100oC
Speed	750 rpm	ISO 8217, category ISO-F-RMK 700	
Mean effective pressure	24.9 bar	SFOC 176 g/kWh at ISO condition	
Piston speed	10.0 m/s		

3.2 W32 Fuel System

The W32 fuel system is divided into two parts: internal and external fuel system. The internal fuel system comprises the following equipment: fuel feed pipes, fuel line, fuel injection pumps, shielded injection pipes, injection valves and optional pressure control valves. The external fuel system is mostly auxiliary systems and is not part of this thesis.

The fuel injection equipment and the system piping are located in a hotbox, providing the maximum reliability and safety when using preheated heavy fuels. There is one fuel injection pump per cylinder with shielded high-pressure pipe to

the injector. The injection pumps, which are of the flow-through type, ensure good performance with all types of fuel. The pumps are completely sealed off from the camshaft compartment. The fuel feed pipes are mounted directly to the injection pumps, using a specially designed connecting piece. The return pipe is integrated in the tappet housing.

The W32 fuel system has a regulating mechanism for increasing or decreasing the fuel feed quantity according to the engine load and speed. The pumps are governed by the governor. The governor adjusts the pumps with a control sleeve, which is attached to the fuel rack.

The W32 engine is designed for continuous operation on HFO as well as LFO. A preheated engine can be started directly on HFO provided that the external fuel system has the correct temperature and pressure. The engine can also be stopped on HFO but the external system has to stay in operation i.e. fuel must be circulated through the stopped engine continuously for heating purposes (Table 2.). /5/

Table 2. Main pressures and temperatures for HFO and LFO. /5/

	HFO	LFO
Pressure before injection pumps, nominal [kPa] (FO press, engine inlet, PT101)	700 ± 50	700 ± 50
Viscosity at engine inlet at running conditions [cSt]	16 - 24	2 *
Quantity of clean leak fuel (100% load) [% of SFOC]	~ 0.4	~ 2
Fuel flow / consumption ratio (100%) load, min.	5 : 1	5 : 1
Filtration, Cold side [?m], absolute	34	34
Filtration, Hot side [?m], absolute	34	-
Fuel oil temperature before injection pumps, max. [ºC] (FO temp, engine inlet, TE101)	140	45
Fuel oil temperature before injection pumps, min. [ºC] (FO temp, engine inlet, TE101)	5[1]	5[1]
FO press, engine outlet, PT102 [kPa]	400 ± 100	100 ± 100[2]

*****) LFO min. (An extra external cooler might be necessary to avoid too low viscosity on LFO installations).

[1] Additionally a min. fuel temperature has to be always at least 10 °C above the pour point, cloud and cold filter plugging point of the fuel and the injection viscosity is allowed to be max. 24 cSt.

[2] If the LFO is circulated through an external booster the fuel outlet pressure will be the same as for HFO /5/.

3.3 Injection Pump

The structure and functions of the injection pump are discussed next.

3.3.1 Injection Pump in General

Injection pumps are the soul of the fuel system. Its main task is to pressurize and transport the fuel into the fuel injector on the cylinder head. Conventional W32 engines are equipped with one injection pump per cylinder. Injection pumps are located in the hotbox and are completely sealed from the camshaft (Figure 1.). All injection pumps in the W32 engine are nowadays manufactured by L`Orange.

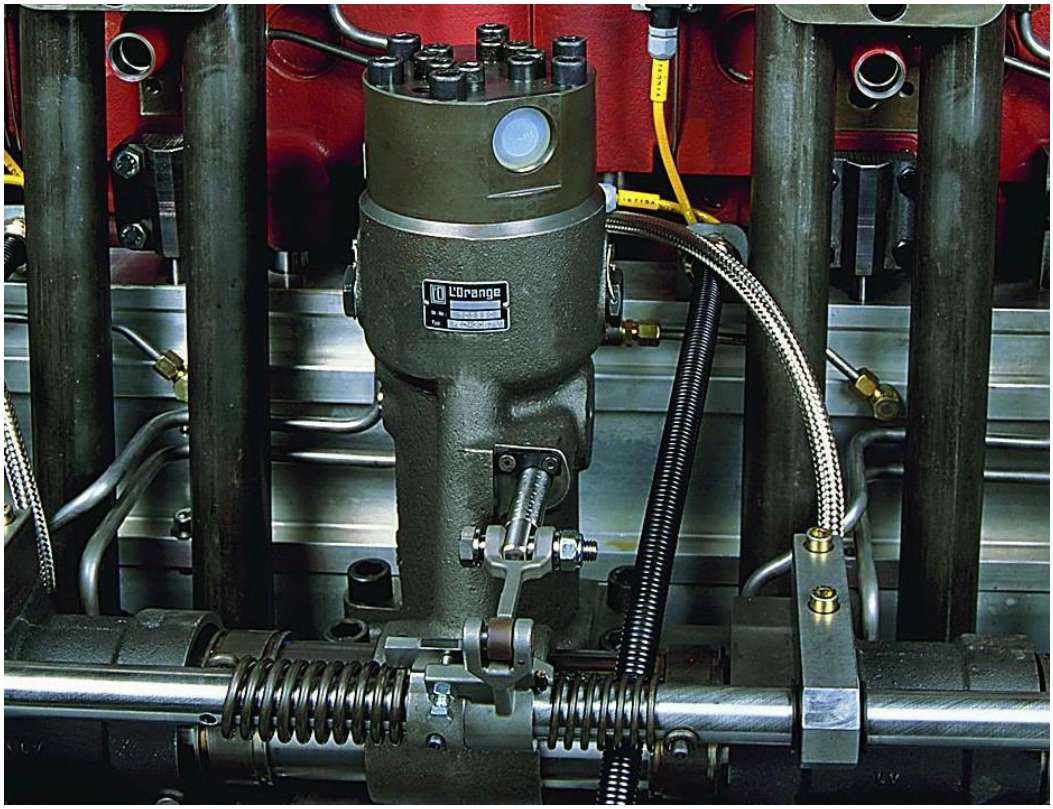

Figure 1. Injection pump in the hotbox.

Injection pumps are one-cylinder pumps with separate roller tappets. The pump element is mono-element type and it is fuel lubricated. The drain fuel is led in an integrated pipe system with atmospheric pressure and back to the low pressure side of the injection pump. /4/

“The plunger, pushed up by the camshaft via the roller tappet and pulled back by the spring acting on the plunger, reciprocate in the element on a predetermined stroke to feed fuel under pressure (Figure 2.) /4/.”

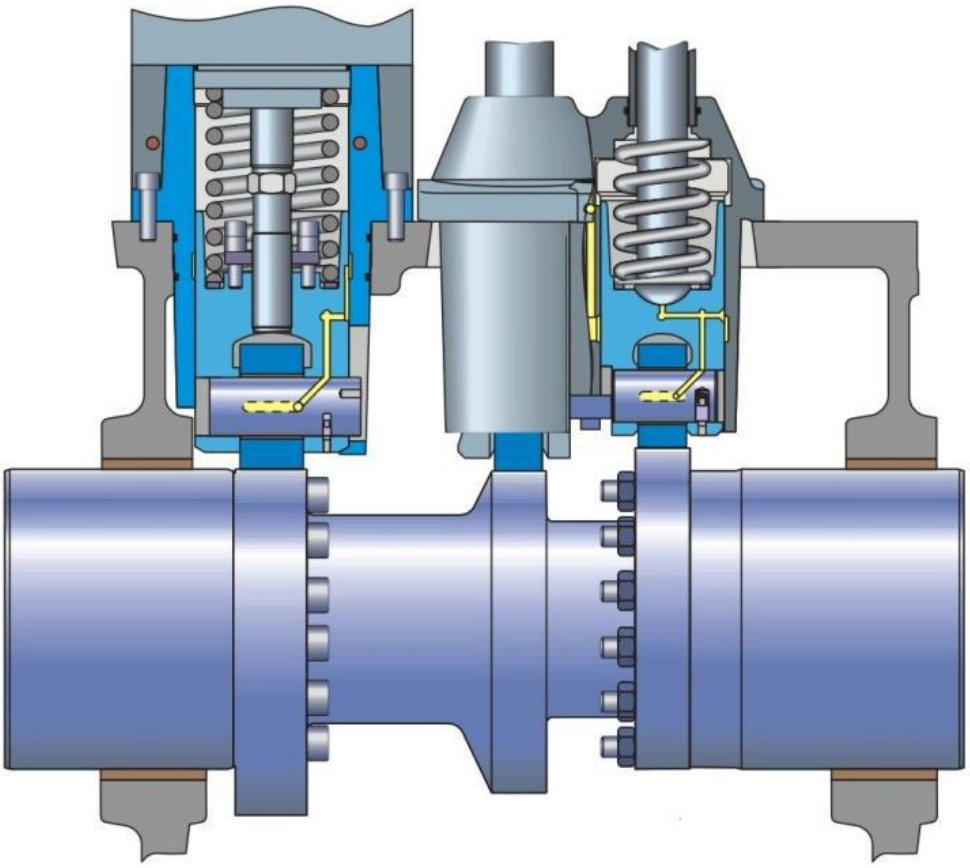

Figure 2. Roller tappet acts on the plunger. /4/

3.3.2 Multihousing

Injection pumps (Figure 3.) consist of many parts: multihousing, pump element, pump head, fuel rack, stop cylinder and pump spring. The multihousing acts as a shell to pump parts. The functions of the multihousing are:

- housing for the injection pump element and other parts
- fuel supply channel along the whole engine
- fuel return channel from each injection pump
- lubricating oil supply to the valve mechanism

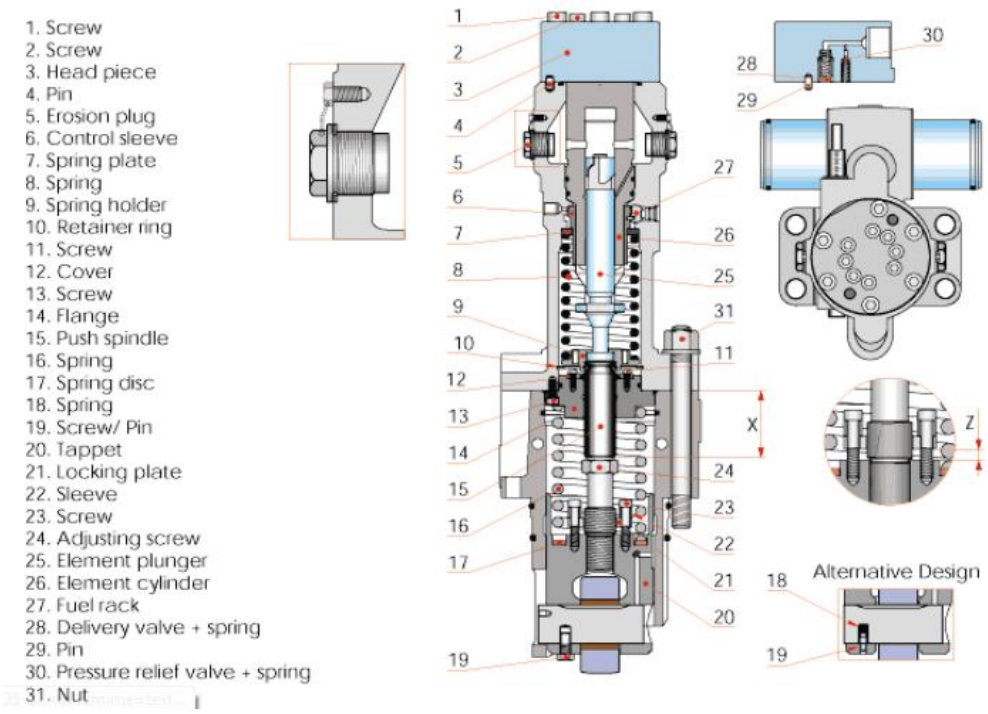

Figure 3. Injection pump. /4/

3.3.3 Pump Element

The pump element consists of two parts, element and plunger (Figure 4.). The element works as a shell for the plunger. Fuel enters through the inlet port of the element bore and to the plunger. The plunger pressurizes the fuel and moves it at high pressure to the delivery valve. The plunger also controls the injected amount of fuel by adjusting the helix edge position relative to the discharge port.

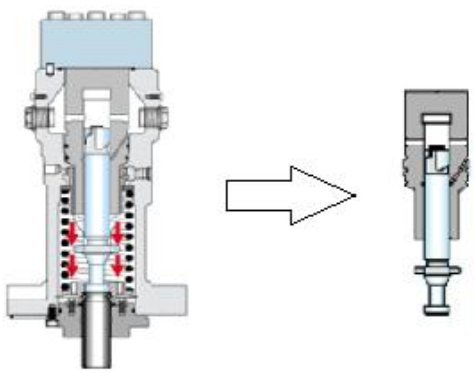

Figure 4. The Pump element. /6/

The pressurization and injection of the fuel takes place when the camshaft lifts the roller tappet, which again lifts the plunger. The plunger has an obliquely cut groove (lead) on its side. When the plunger is at the lowest position or the bottom dead centre, fuel flows through the inlet port into the element bore. The rotation of the camshaft moves the plunger up. When the top edge of the plunger step is lined up with the ports, the application of pressure to fuel begins (Figure 5.). As the plunger moves up further, and the helix of the plunger meets with the ports, the high pressure fuel flows through the lead to the ports and the pressure feed of fuel is completed.

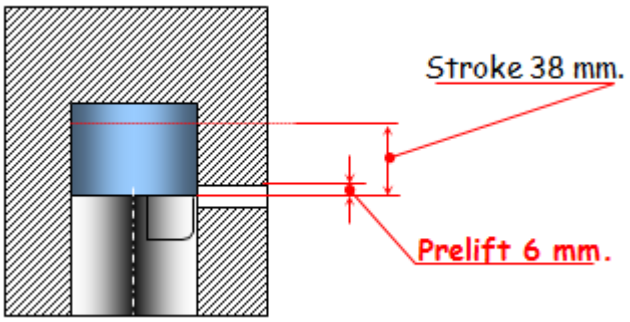

Figure 5. The Plunger stroke. /6/

According to the engine load, the amount of fuel injected is increased or reduced by turning the plunger a certain angle to change the helix position where the ports are closed on the up stroke and hence increasing or reducing the effective stroke. /4/, /5/

3.3.4 Pump Cover

The pump head or pump cover holds in two valves: fuel delivery valve (FD valve) and constant pressure valve (CP valve) (Figure 6.). FD valve transports the fuel into the injection pipe and from there into the injector. Once the effective stroke of the plunger ends, the delivery valve is brought back to its original position by the spring; this blocks the fuel path and prevents the counter flow of the fuel.

After the effective stroke, the fuel is drawn back through the constant pressure valve from the high pressure injection pipe to instantly lower the residual pressure

between the delivery valve and the nozzle. This termination maintains a consistent injection "shot to shot" by maintaining a constant pressure in the pipe line between injections. /4/

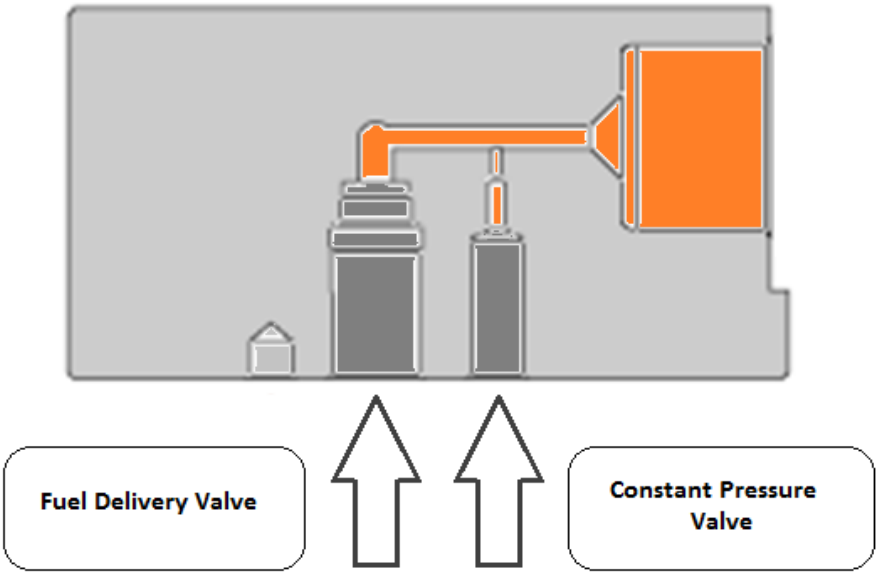

Figure 6. Pump cover and valves.

3.3.5 Fuel Rack and Stop Cylinder

Other important parts of the injection pump are fuel rack and overspeed trip device. Setting the fuel rack to zero position stops the fuel injection. The fuel rack is connected to the regulating mechanism of the governor. If the fuel rack is moved, the control sleeve in mesh with the rack is turned. Since the control sleeve acts on the plunger, the plunger turns with the control sleeve, thus the effective stroke changes and the injected fuel amount increases or decreases.

For emergencies the fuel rack of each injection pump is fitted with a stop cylinder (Figure 7.). The pneumatic overspeed trip device is mounted on the multihousing and acts directly on the fuel rack. If the overspeed trip device is activated, pressurized air acts on a piston in a cylinder attached to the multihousing. The piston

forces the fuel rack to a "no fuel" position. The force of the overspeed trip device is stronger than the torsion spring in the regulating mechanism. /4/, /5/

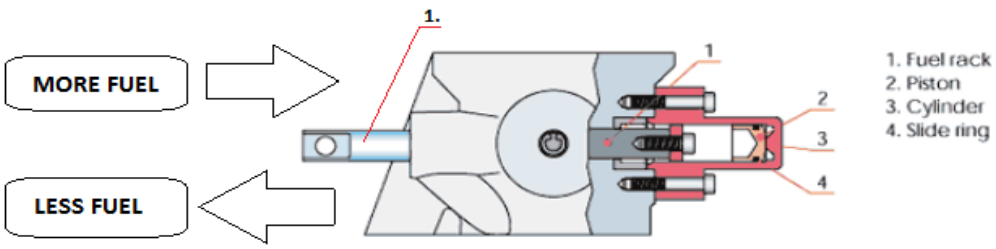

Figure 7. Fuel rack and stop cylinder. /4/

3.3.6 Pump Spring

The pump spring is located in the multihousing and more precise in the spring housing. The purpose of the pump spring is to pull back the plunger, when effective stroke ends (Figure 8.).

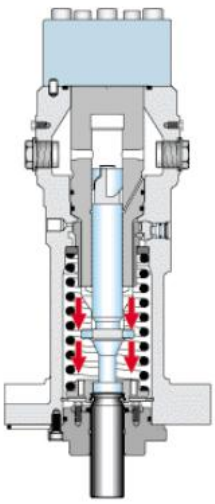

Figure 8. Pump spring pulling plunger back. /5/

3.4 Injection Valve

The injection valve is the last piece of the fuel system. It is located in the cylinder head. The injection valve consists of two main parts, nozzle holder and nozzle element (Figure 9.).

Fuel enters the nozzle holder sideways through a connection piece (2), mounted into the nozzle holder. The nozzle receives high pressure fuel from the injection pipe and injects this fuel into the combustion chamber as a very fine spray. The pressure at which the nozzles open can be adjusted by turning the adjusting screw (7) in the injection valve. /5/

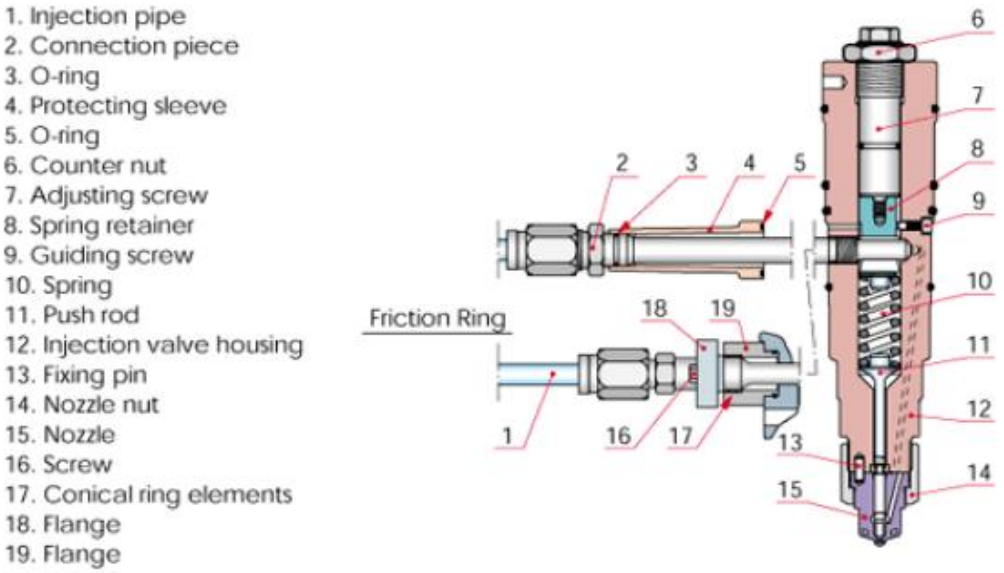

Figure 9. Injection valve and main parts. /4/

4 OBSOLESCENCE MANAGEMENT

4.1 Obsolescence in General

Obsolescence is a state that occurs when a product or service is no longer wanted, manufactured or supplied but it may still work properly. Obsolescence occurs when replacement has become available and old products or services are superseded by the new ones. Typically, obsolescence is preceded by a gradual decline in popularity.

Obsolescence is usually referred to as Diminishing Manufacturing Sources and Material Shortages (DMSMS). Both terms are often used interchangeably, but obsolescence refers to the lack of availability through improved technology and DMSMS to the shortage of manufacturing materials or sources. A third term used with two previous ones is product life cycle (Figure 10). /10/

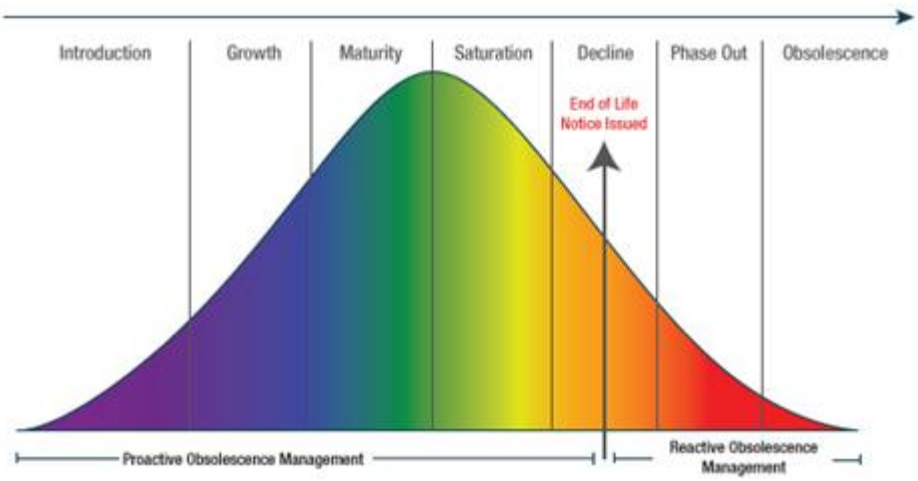

Figure 10. Product life-cycle phases. /10/

The product life cycle phases are: Introduction, Growth, Maturity, Saturation, Decline, and Phase-Out. The last four phases are connected to product obsolescence. **Maturity** is the stage when the sales of the product reach its peak. **Saturation** is the phase when the sales have started to level down. **Decline** is at the end of the Saturation phase, and it gives the first indications of the product's end of life. **Phase-out** is the last phase of the product life cycle and it means that manufacturing of the product is discontinued. /9/, /10/

4.2 Obsolescence Management

Obsolescence management is a sum of many factors. Managers are usually trying to find the most profitable solutions when making decisions about product obsolescence. Factors that affect the decisions are supply and demand, costs, availability, product development, laws and regulations.

Obsolescence Management is needed to mitigate the risk of component obsolescence or to plan when make end of life (EOL) notices. Effective obsolescence management strategies can save a lot of money and time, by avoiding the redesign of end products. Yet, there are no real standards for obsolescence management, only guidelines and law regulations. Organizations usually generate their own policies on how to manage old products or spare parts for older products. For example, if companies are investing a lot of money to product development, older products are often phased out step by step after launching new model to market. /10/

Obsolescence management can be divided in two categories: proactive and reactive obsolescence management. As seen in Figure 10, proactive obsolescence management tries to identify and prevent obsolescence risks, while reactive obsolescence management acts after EOL notice trying to find solutions to obsolescence issue. The following chapters explain differences between proactive and reactive obsolescence management.

4.2.1 Proactive Obsolescence Management

Proactive obsolescence management is a method of creating a strategy to mitigate the risk of component obsolescence in future. It approaches obsolescence in so called Manufacturer's Point of View. Proactive obsolescence management is usually followed from the design phase all the way to the decline phase. While there are no quick or easy solutions, using proactive obsolescence management techniques the problems faced on long life-cycle programs can be minimized.

Proactive obsolescence management techniques can be divided into two categories: design-based techniques and production engineering-based techniques. **De-**

sign-based techniques attempt to minimize the initial problem and alleviate obsolescence management challenges. It is a matter of changing the perspective to save the design.

Production engineering-based strategy attempts to control the existing situation. It uses “silicon road map strategy” to manage obsolescence issue. Road maps sent to customers are used to tell which products are going EOL and new products superseding the old ones. These road maps can be reviewed for new products that can fill the role of the ones that are going EOL, allowing customers to do modifications to certain systems or subsystems with minimal disruption. /10/

4.2.2 Reactive Obsolescence Management

When a product achieves the decline phase of its life-cycle, reactive obsolescence management is taken in action. Reactive obsolescence is more from the customers’ point of view. Reactive obsolescence management is the method of acting upon the end of life of a component, after the EOL notice is released. It tries to mitigate the risk of obsolescence with following solutions:

- Finding alternate replacement from a different manufacturer.
- If there is no alternate replacement, costly last time buys (LTB) can be made. This means that the company buys remaining old parts from the supplier and storages them for future use.
- Finding nearest equivalent alternate part, to reduce the redesign cost.
- Creating a custom component similar to the obsolete one, and having a contract signed with a qualified manufacturer for a certain period.
- Redesign a sub-section or entire product. /10/

4.3 Obsolescence Types

As products evolve into updated versions, they require parts and technology distinct from their predecessors. However, the earlier versions of the product often still need to be maintained throughout their life cycle. As the new product becomes predominant, there are fewer parts available to fix the earlier versions and

the technology becomes outdated. Obsolescence can be divided in four main categories: technical, functional, planned-and postponement obsolescence.

Technical obsolescence occurs when a new product or technology supersedes the old; even if the older product may still be functional, it is preferred to use the newer technology. Another reason for technical obsolescence can be that supporting technologies for producing or repairing the product may no longer be available.

Parts or products can become **functionally obsolete**: when they do not work as they should or the way they were created, if replacements for worn parts are no longer available or the cost of replacing a worn part is higher than a new component. Functional obsolescence can also be result of natural wear or some intervening act. Products would be rendered obsolete due to the inability to access service.

Planned obsolescence can be introduced as a marketing strategy with the objective of generating long-term sales volume by narrowing time between purchases. Products can be designed to wear out, for example four years from its purchase. This kind of design pushes the customer to replace product within four years.

Postponement obsolescence refers to a situation where technological improvements are not introduced to a product, even though they could be. One possible example is when an auto manufacturer develops a new feature for its line of cars, but chooses not to implement that feature in the production of the least expensive car in its product line. /10/

5 INVENTORY COSTS

In general over half of the warehousing costs are caused by the personnel costs, the rest are divided between buildings, machines, equipment, IT equipment - and software. Inventory management involves a number of cost factors that should be identified, so that costs can be reduced. Inventory costs associated with are: price of raw materials and products, holding costs, ordering costs and stock-out costs. /7/

5.1 Holding Cost

Holding cost (or carrying costs) means the total cost of holding the inventory. This includes warehousing costs, such as rent, utilities and salaries and financial costs, opportunity cost, and inventory costs related to perishability, pilferage, shrinkage and insurance. Holding cost depends on the value of inventory and is usually around 10-40% of annual value of inventory. Costs vary depending on the products size and storage requirements.

Holding costs are divided in three classes: cost of capital, storage space cost and risk cost. **Cost of capital** is the opportunity cost for capital or rate of return. It includes the costs of investments, interest on working capital, taxes on inventory paid, insurance costs and other costs associate with legal liabilities. **Storage space costs** are e.g. rent or cost of storage place. Storage space costs depend on the size of the storage place and dimensions and storage requirements of a product. **Risk cost** refers to outlet risk and price risk. Companies usually express holding cost as a percentage of units' value /7/, /8/:

$$C_A = v * r \qquad (1)$$

Where:

C_A = annual storage cost for one unit (€/unit)

v = value (€/unit)

r = percentage of storage cost (%)

5.2 Ordering Cost

Ordering costs are costs of ordering a new batch of raw materials or finished products. These include cost of placing a purchase order, costs of inspection of received batches, documentation costs, etc. For the same item, ordering cost is the same, regardless of the order size.

Ordering costs vary inversely with holding costs. It means that the more orders a business places with its suppliers, the higher will be the ordering costs. However, more orders mean smaller average inventory levels and hence lower holding costs.

Total inventory costs are equal to total ordering cost plus total holding cost. It is important for a business to minimize the sum of these costs, which it does by applying the economic order quantity model. How much to order is determined by arriving at the Economic Order Quantity (EOQ). /7/, /8/

5.3 Stock-out Cost

Stock-out costs are the cost associated with the lost opportunity caused by the exhaustion of the inventory. The exhaustion of inventory could be a result of various factors, e.g. the most notable amongst them is defective shelf replenishment practices.

Stock-outs could prove to be very costly for the companies. The subtle responses could be postponement of purchase. The more disastrous ones are that the consumers may get frustrated and switch stores or even purchase substitute items (brands). Various retailers follow the concept of “Safety Stock” in order to avoid the situation of stock-outs. Stock-outs could occur at any point of the supply chain. /7/, /8/

5.4 Inventory Types

Inventories can be divided in four classes: cycle, safety stock, anticipation and pipeline inventory. The partition of total inventory varies directly with the lot size and is called **cycle inventory**. Determining the order frequency and quantity of items is called lot sizing.

Two principles apply to lot sizing: 1. Lot size Q varies directly with the elapsed time or cycle between orders. If a lot is ordered every 5 weeks, the average lot size must be equal 5 weeks' demand. 2. The longer the time between orders for given item, the greater the cycle inventory must be.

Average cycle inventory = (Q + 0) / 2 = Q / 2 (2)

Total inventory costs for cycle inventory can be calculated with following formula:

$$C = (Q / 2) * C_A + (D / Q) * S \quad (3)$$

Where:

C = total annual inventory cost

Q = Lot size in units

C_A = Annual holding cost for one unit

D = Annual demand, units per year

S = Ordering cost for one lot

Safety stock inventory is the surplus inventory that the company holds to protect against uncertainties in demand, lead time and supply changes. Companies hold safety stocks to avoid service problems or hidden costs. The safety stock ensures that services are not disrupted when problems occur.

To create a safety stock the company places an order for delivery earlier than the item is needed. Therefore, the order arrives earlier than it is needed, creating a safety stock. For example, the lead time for product "x" is six weeks, but the company orders eight weeks in advance just to be safe. This creates a safety stock equal to two weeks.

Anticipation inventory is used to absorb uneven rates of demand or supply. The manufacturer can make products in stock during periods of low demand. This

makes it easier to the manufacturer to control the demand peaks and keep output level steady during the high demand periods.

Pipeline inventory is created when an order for an item is issued but not placed in inventory. Pipeline inventory exists in form of materials or product that moves between two places e.g. from plant to customer. Longer lead times of higher demands create more pipeline inventory. Pipeline inventory between two stocking points can be measured as:

$$D_L = dL \qquad (4)$$

Where:

D_L = average demand during lead time

d = average demand for the item/period

L = the number of periods in the items lead time to move between the two points. /8/, /9/

5.5 Reducing Inventory Costs

Basic tactics for reducing inventory costs are called levers. Levers can be divided in primary level and secondary level. A primary level lever is the one that has to be activated when reducing inventory. The secondary level reduces the penalty cost applying the primary lever and having the inventory at the first place.

In cycle inventory the primary lever is to reduce the quantity of items moving in supply chain. Without the secondary lever this might lead to a huge increase in ordering cost. If this happens, next two secondary levers can be used: Streamline the order methods or increase repeatability. Primary leaver for safety stock is to place an order closer the time that parts must be received. Without secondary levers this can lead to unacceptable customer service. Four secondary leavers can be used: 1. Improve forecasts and information flow between customers, 2. Cut lead times of purchased items, 3. Reduce supply uncertainties by sharing information on production with the supplier, and 4. Rely more on equipment and labor buffers.

Primary leaver for anticipation inventory is to match the demand rate with the supplier production rate. Secondary levers that can be used are: 1. Add new products with different demand cycles to compensate seasonal demand, 2. Provide off-seasonal promotion campaigns and 3. Offer seasonal pricing plans.

For pipeline inventory primary lever is to reduce lead time. Two secondary leavers can be used. 1. Find more responsive suppliers, improve logistics and improve handling in a plant. 2. Make changes in quantity if the lead time depends on a lot size. /8/

6 WÄRTSILÄ CASE

The idea of the whole thesis was to find out the current status in the field, based on guiding from Wärtsilä. The required outcome for the whole process was to screen a possibility to eliminate old injection pumps, injection valves and spare parts for them. The figure below describes the whole process done (Figure 11.).

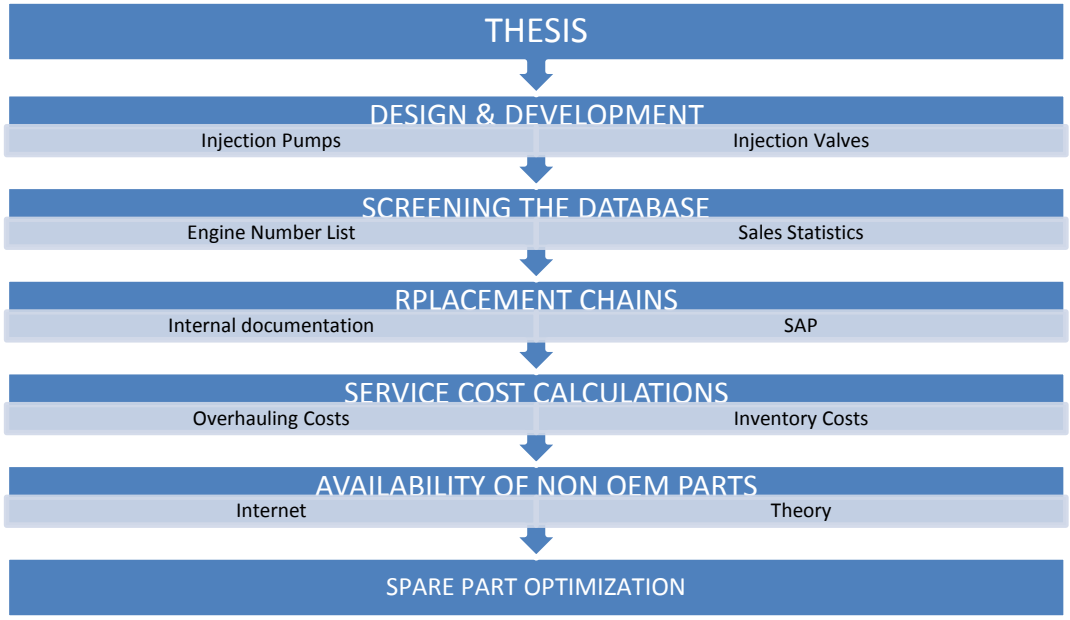

Figure 11. Block diagram of the task done within this thesis.

In this chapter tasks from design & development to availability of non-OEM parts are being described. Chapters are formed as follows: what is needed to be done, how it is done and results. Spare part optimization is explained in Chapter 7.

6.1 Design and Development of the Injection Pumps

The Injection pumps have been developed in several steps in the W32 engine. Continuous development has resulted in the birth of several pump models during the years (Table 3.). This chapter explains the differences and improvements between old and new injection pump models. /6/

Secret, contains information that can`t be published.

6.1.1 PEO-G057 (Original Design)

Secret, contains information that can`t be published.

6.1.2 PEO-G057a

Secret, contains information that can`t be published.

6.1.3 PEO-G057b, c

Secret, contains information that can`t be published.

6.1.4 PEO-G057d

Secret, contains information that can`t be published.

6.1.5 PEO-G057er, e

Secret, contains information that can`t be published.

6.1.6 PEO-G057fv

Secret, contains information that can`t be published.

6.1.7 PEO-G057mv

Secret, contains information that can`t be published.

6.1.8 PEO-G057sv Intermediate

Secret, contains information that can`t be published.

6.1.9 PEO-G057sv

Secret, contains information that can`t be published.

6.1.10 PEO-G057sv, OVAKO

Secret, contains information that can`t be published.

6.1.11 PEO-G057TV

Secret, contains information that can`t be published.

6.1.12 PEO-G057TA

Secret, contains information that can`t be published.

6.1.13 PEO-G089V1

Secret, contains information that can`t be published.

6.2 Design and Development of the Injection Valves

As the injection pumps have developed, so have the injection valves. Over the years new injection valves have been brought to the market. The table below shows all different conventional valve models for W32 engine.

Secret, contains information that can`t be published.

6.2.1 Nozzle Elements

Nozzle elements can be divided in three categories: Type 1 (old), Type 2 (intermediate) and Type 3 (new). Type 1 nozzles are old models those are not available anymore. Old nozzle models can be seen in table 6.

Secret, contains information that can`t be published.

6.2.2 Nozzle Holders

Nozzle holders can be divided into five types. Types are referred to design stages, which again is referred to injection pressure. All five nozzle holder types can be seen in Table 9.

Secret, contains information that can`t be published.

6.3 Screening the Database

The thesis was started by screening the engine database. The task was to investigate which kind of injection pumps, elements and injection valves were still active according to our system. The emphasis was on the situation of old pump models. Some cases needed further investigation because of the upgrades in injection equipment.

In this task the SAP-program was used and more precise the CR Query Report. Searching terms “165001” was used, which is the spare part number (SPN) for injection pump and W32 in the reference field. This search gave a list of 2821 engine numbers. A list was also received from a colleague, which was compared to the list from SAP.

The first task was to exclude the common rail injection pumps from the list. After deleting the common rail pumps engines that were scrapped and/or updated to new pumps were sorted out. Finally, a list of engines active in the field was assembled, 2785 pieces in total (Table 10**.**).

Secret, contains information that can`t be published.

Status means whether pumps are still available as a complete spare part pump, 02 = available and Z3 = obsolete. Engine QTY means the number of engines operating in the field. Pump QTY is the number of pumps operating in the field. Stock QTY means the quantity of injection pumps physically in stock.

The same process was repeated with injection valves. The number of engines found in the CR Query Report was 2810. After sorting and deleting scrapped, updated and gas engine valves, the number was 2749 (Table 11.).

Secret, contains information that can`t be published.

6.4 Screening Sales Statistics

The task was to investigate spare part sales and find out how much old parts are still sold. Due to the lack of rights to this part of the SAP, this data was received

from a colleague from the Business Applications department; that is sales statistic for injection pumps, injection valves and their spare parts that were found active according to SAP. The data was gathered between 2004 and 2014. All the following graphs shown in this chapter use the same form, the vertical axis is the sales quantity in units and the horizontal axis is years.

Because of screening the database the number of old injection pumps was now known. The pump elements were studied first. The following graph demonstrates the difference between old and new element sales.

Secret, contains information that can`t be published.

6.5 Replacement Chains

The task was to find out if the SAP replacement chains were up- to- date. The Technical Services internal documentation was used and an injection expert was consulted to figure out if the chains were right and if there were any possibilities to make any new ones.

All possible replacement chains for injection pumps existed in SAP and there were no new ones to make at the moment. For injection valves and valve parts there were possible chains to be upgraded.

Secret, contains information that can`t be published.

6.6 Service Cost Calculations

There were three different tasks in service cost calculations. The first was to compare the plan overhauling costs to “real field experience”, the second was the comparison of spare part price between overhauls versus new pumps. The final task was to calculate the inventory costs for old spare parts.

6.6.1 Overhauling Cost VS “Real Field Experience”

Wärtsilä makes example calculations to customers with the program Service Calculation Office (SCO). SCO is a web-based calculation application in Wärtsilä's

portal. The purpose of SCO is to aid in the making of service agreements by calculating the maintenance work costs, spare parts cost, personnel cost and operations cost.

SCO calculations are based on statistics, and time consumed to work is calculated for dismounting, over all inspection, element and sealing change and reassembly. Depending on the working conditions, time used is different. SCO offers three different options for working conditions: workshop, normal and difficult conditions. The SCO injection pump overhaul calculation form is found at the end of the thesis in Appendix 1.

Secret, contains information that can`t be published.

6.6.2 Overhauling vs New Pumps

The cost between overhauling the pump vs. upgrading the old pump to the new version was compared. This topic was approached in four different ways:

- Injection pump FV overhaul vs new pump SV OVAKO (cost prices)
- Injection pump SV overhaul vs new pump SV OVAKO (cost prices)
- Injection pump SV overhaul vs new pump SV OVAKO (GLP prices)
- Injection pump SV overhaul vs new pump SV OVAKO (cost prices, GLP prices and work included).

Secret, contains information that can`t be published.

6.6.3 Inventory Costs

The idea was to calculate how much money can be saved when old spare parts can be left out of the inventory. These calculations were done for old spare parts only and parts included were: pump element, three sealing sets and pump cover. The total inventory costs are calculated with two different methods.

The first thing was to calculate the annual holding cost for one unit with formula (1). The percentage of storage cost is xx% (calculated from cost price). The safety stock is found from SAP. The ordering cost per order line is xx€. Savings made in

inventory costs are seen in Table 16. The annual inventory costs are calculated with formula (5), which is a modified version of the formula (3).

$$C_s = Q_s * C_A + O * S \quad (5)$$

Where:

C_s = Annual inventory cost

Q_s = (Safety stock + Reorder quantity) / 2

C_A = annual storage cost for one unit (€/unit)

O = Number of orders

S = Ordering cost for one lot (€/order)

Secret, contains information that can`t be published.

6.7 Availability of Non- OEM Parts

Last of the given tasks was to search sellers of non-OEM parts on the Internet. This task was approached from two perspectives, Internet investigation and theoretical calculations.

Table 3. Some major external spare part suppliers for Wärtsilä engines.

Company	*Own manufact.*	*Reco*	*OEM Resale*
MMS	X		X
DUAP	X	X	
OMN		X	
Malwi Marine		X	
Naval Diesel		X	
SIMPLEX TURBOLO		X	X
Ras-tek			X
Paul Klaren OEM Parts			X
L`ORANGE			X
Fuel mechaninics ltd			X
Bengi BV			X
Seiho Machinery & Electric			X

Suppliers can be divided into three main categories: own manufacturing, reconditioning and OEM resale. Major service suppliers found are seen in the table above.

Secret, contains information that can`t be published.

7 SPARE PART OPTIMIZATION FOR WÄRTSILÄ

7.1 Injection Pumps and Spare Parts

A proposal was to be made on obsoleting and terminating the older injection pump spare parts if possible. This topic was approached with three different proposals. Proposal 1 is the easiest with minor changes on the existing situation, proposal 2 is something in between and proposal 3 is the most effective one.

7.1.1 Proposal 1

Secret, contains information that can`t be published.

7.1.2 Proposal 2

Secret, contains information that can`t be published.

7.1.3 Proposal 3

Secret, contains information that can`t be published.

7.2 Injection Valves

7.2.1 Proposal 1.

Secret, contains information that can`t be published.

7.2.2 Proposal 2.

Secret, contains information that can`t be published.

7.3 Conclusion of Spare Part Optimization

Secret, contains information that can`t be published.

8 CONCLUSION

The thesis was useful for Wärtsilä because accurate knowledge of the number of old injection pumps in the field and amount of sales for old spare parts is now known. The replacement chains are now up-to-date. Work books and internal database has been updated. Big decisions can be made based on the information of this thesis.

As a whole, the process went well. During the research phase some unpredictable cases and challenges appeared but solving these problems went well. Writing the theory part of the report and searching the information could have gone faster.

This has been a very educational process. During the project a huge amount of knowledge about injection equipment has been learned, basic skills of SAP have been developed and documentation skills have improved. It was very pleasant to work with professionals and learn from them.

More accurate calculations should be done for the component holding costs, which are now calculated to be xx% and seem a bit small. Usually component holding costs are around 10%.

If Wärtsilä still determines to keep old spare parts, such as old model pump elements and sealing sets for sale, the price of these components should be increased. And finally pump covers should be evaluated to be included to the injection pump overhaul calculations in SCO.

REFERENCES

/1/ About Us, Company & Management, General Information 2015. Wärtsilä global web pages. Accessed 6.1.2015.
http://www.wartsila.com/en/about/company-management/overview

/2/ Technical Support, Wärtsilä 32 2015. Wärtsilä Intranet web pages. Accessed 6.1.2015.
http://compass.wartsila.com/Operations/Life_cycle_support/Technical_Support/Product_Support/Product_Groups/W32,_Vasa_32/Pages/Default.aspx

/3/ Products, W32 2015. Wärtsilä global web page. Accessed 6.1.2015
http://www.wartsila.com/en/engines/medium-speed-engines/wartsila32

/4/ W32 Instruction Manual, 16: Injection System. Accessed 9.1.2015
http://eldoc.wartsila.com/eldoc/main.jsp?reftype=w32

/5/ Installation manual W32D, 2: Fuel system 2015. Accessed 12.1.2015.
http://infoboard.wartsila.com:8080/infoboard/main.jsp?documentref=103463.xml

/6/ W32 Injection valve Pump element and sealing arrangements RevB August 2014, excel, Wärtsilä internal documentation. Accessed 14.11.2014.

/7/ Logistiikan maailma, Varastointikustannukset 2015. Logistiikan Maailma web pages. Accessed 27.12015.
http://www.logistiikanmaailma.fi/wiki/Varastointikustannukset

/8/ Krajewski L. J., L. P. Ritzman and M. K. Malhotra, 2010. Operations Management, Processes and Supply Chains. 9st. Edition. 9; 345-371, 12; 435-468. New Jersey. Pearson.

/9/ Heizer,J., B. Render. 2014. Operations Management, Sustainability and Supply Chain Management. 11st. Edition. Kendallville. Pearson.

/10/ Bartels, B, U. Ermel, P. Sandborn and M. G. Pecht. 2012. Strategies to the Prediction, Mitigation and Management of Product Obsolescence.1st. Edition. New Jersey. Wiley.

/11/ Carlström K. 2009. Wärtsilä 32 Nozzles and Nozzle Holders. WFI-S Technical Service, Issue 1.

APPENDIX 1. SCO INJECTION PUMP OVERHAUL CALCULATION.

Secret, contains information that can`t be published.

APPENDIX 2. Difference between Sealing Sets.

Secret, contains information that can`t be published.