Ioannis Soultanis

Electric Conversion of a Retro-Era Vehicle

Helsinki Metropolia University of Applied Sciences

Bachelor of Engineering

Automotive Engineering

Bachelor's Thesis

May 30, 2016

Metropolia

Author(s) Title Number of Pages Date	Ioannis Soultanis Electric Conversion of a Retro-Era Vehicle 27 pages + 2 appendices May 30, 2016
Degree	Bachelor of Engineering
Degree Programme	Automotive Engineering
Specialization option	Automotive Electronics Engineering
Instructor(s)	Vesa Linja-aho, Senior Lecturer Ville Eskelinen, Project Manager

The purpose of this Bachelor's thesis was to design and realize a modern vehicle control system in a 1970's vintage car that was converted to an electric vehicle. In addition to the control system, the 12 V low voltage system was completely redone based on the old system, in order to ensure its functionality and that it met all the requirements set for it. This thesis was assigned by e-Drive Retro OÜ, an Estonian based startup company.

During this thesis research was carried out on the engineering, technology and control system behind the Electric RaceAbout – vehicle owned by Helsinki Metropolia University of Applied Sciences and two converted Fiat Doblo – electric vehicles owned by Metropolia. Different source codes were also studied and accessed either openly through the internet or through Metropolia's electric vehicle projects.

The actual electric conversion was carried out using ready-made equipment and devices. The electric powertrain components were acquired from Swiss BRUSA Elektronik. BRUSA also provided a template source code for the main control unit that was freely modifiable. The battery and battery management system is made by South-Korean Kokam. There is also a control unit made by Danish LiTHIUM BALANCE that provides CHAdeMO-fast charging capability for the vehicle.

The thesis begins with a brief introduction to the history of e-Drive Retro and their motivation for assigning this thesis. The thesis also presents some of the history of the original vehicle, its electric system and technical specifications that are then compared to the converted vehicle. Ideas for improvement and challenges are also discussed.

The final result of this thesis was a finished control system and all the confidential documentation related to it.

Keywords	Electric vehicle, EV, electric vehicle conversion, vintage, retro

Metropolia

Tekijä(t) Otsikko Sivumäärä Aika	Ioannis Soultanis Retrohenkisen ajoneuvon muuntaminen sähköiseksi 27 sivua + 2 liitettä 30.5.2016
Tutkinto	Insinööri (AMK)
Koulutusohjelma	Auto- ja kuljetustekniikka
Suuntautumisvaihtoehto	Autosähkötekniikka
Ohjaaja(t)	Lehtori Vesa Linja-aho Projektipäällikkö Ville Eskelinen

Tämän insinöörityön tavoitteena oli suunnitella ja toteuttaa nykyaikainen ajoneuvon hallintajärjestelmä 1970-luvun ajoneuvossa, joka on muunnettu sähköiseksi. Hallintajärjestelmän lisäksi ajoneuvoon tehtiin 12 V:n matalajännitejärjestelmä kokonaan uudestaan vanhaan järjestelmään pohjautuen, jotta matalajännitejärjestelmän toimivuus voitaisiin taata ja räätälöidä käyttöön sopivaksi. Työn tilaajana on toiminut e-Drive Retro OÜ, joka on virolainen startup-yritys.

Työn aikana tutustuttiin muun muassa Metropolia Ammatikorkeakoulun Electric RaceAbout -ajoneuvon tekniikkaan ja hallintajärjestelmiin ja Metropolian omistamiin Fiat Doblo -sähköajoneuvoihin. Lisäksi perehdyttiin erilaisiin lähdekoodeihin, joihin päästiin käsiksi joko avoimesti internetin kautta tai Metropolian sähköautoprojektien kautta.

Itse sähkökonversio tehtiin ajoneuvoon käyttämällä valmiita laitteita. Sähköisen voimalinjan komponentit hankittiin sveitsiläiseltä BRUSA Elektronikilta. BRUSAlta saatiin myös valmis pohja pääohjainlaitteen lähdekoodiin, jota muokattiin omiin tarpeisiin sopivaksi. Ajoneuvon akusto ja akunhallintajärjestelmä on eteläkorealaisen Kokamin valmistama. Lisäksi ajoneuvossa on tanskalaisen LiTHIUM BALANCEn valmistama CHAdeMO-pikalatausstandardia tukeva ohjainlaite, joka mahdollistaa ajoneuvon pikalataamisen.

Työssä käsitellään aluksi e-Drive Retron historiaa lyhyesti ja yrityksen motivaatiota tämän insinöörityön teettämiseen. Lisäksi työssä esitellään alkuperäisen ajoneuvon historiaa, sähköjärjestelmää ja myös teknisiä tietoja, joita verrataan konvertoituun ajoneuvoon. Lisäksi esitetään parannusehdotuksia ja pohditaan työn asettamia haasteita.

Työn lopputuloksena syntyi valmis hallintajärjestelmä ja kaikki siihen liittyvä luottamuksellinen dokumentaatio.

Avainsanat	Retro, sähköauto, sähköautokonversio, konversio, muunnos

Metropolia

Contents

Metropolia

Appendices

Appendix 1. 12V Wiring Diagram After the Conversion

Appendix 2. Control system documentation (Confidential)

List of Abbreviations

AC	alternating current
AGM	Absorbed Glass Mat
ASM	asynchronous motor
BHP	brake horsepower
BMS	Battery management system
BSC	Bidirectional Supply Converter
CAN	Controller area network
CANopen	an open source CAN communication protocol
CC/CV	Constant current / constant voltage
CHAdeMO	Charge de Move, a direct current fast charging standard
DB9	D-subminiature 9-pin connector
DC	Direct current
DMC	Digital Motor Controller
ECU	Engine Control Unit/Electric Control Unit
EV	Electric Vehicle
HMUAS	Helsinki Metropolia University of Applied Sciences
HSM	Hybrid synchronous motor
HV	High voltage
I/O	input/output
ICE	Internal-Combustion Engine
IMS	insulation monitoring system
kBps	kilobyte per second
kW	kilowatt, a unit of power
kWh	kilowatt-hour, a unit of energy
LIN	Local interconnect network
Li-NMC	Lithium nickel manganese cobalt
LV	Low voltage, meaning 12 V
Nm	Newton meter
PM	Permanent magnet
PMARM	Permanent magnet assisted reluctance motor
PMSM	Permanent magnet synchronous motor
PWM	Pulse Width Modulation
RPM	rounds per minute
RS-232	Serial communications standard 232
SOC	State of charge

SynRM	Synchronous reluctance motor
VCU	Vehicle Control Unit

1 Introduction

The objective of this thesis was to design and realize a modern vehicle control system in a converted 1970's vintage electric car. The focus was that the system would be modular, universal and highly customizable, and that the overall visual appearance and characteristics of the vehicle had minimal alterations compared to the original.

This also meant utilizing and repurposing the original dash instruments and controls of the vehicle.

2 Company Overview

2.1 History

E-Drive Retro OÜ is an Estonian based startup company founded in 2015 by Michael M. Richardson. Though a young company, the idea behind it had been brewing for many years, and it was a unison of technological advancements, technological maturity and stumbling upon the projects at Helsinki Metropolia University of Applied Sciences (HMUAS) that helped Michael make a decision to start the company and collaborate with HMUAS to realize the first electric conversion of the company.

2.2 Business Idea and Vision

The vision of the company is to revitalize vintage cars of the 1950's through the 1970's with sustainable electric-vehicle technology while preserving the nostalgic driving experience and appearance for car enthusiasts [1]. The idea is to accomplish the conversion in a way that one couldn't tell the difference between the original vehicle and the converted vehicle with the hood and panels closed.

3 Vehicle Introduction

3.1 1972 Triumph GT6 MK3

The vehicle that was converted and worked on during this thesis was a 1972 Triumph GT6 Mk3 that the customer (Michael Richardson) had first bought from the United States and then shipped to Finland through Estonia. The vehicle was brought to the workshop facility of HMUAS in Hernesaari, Helsinki. One of the reasons this vehicle was chosen was that its so-called sister model, the Triumph Spitfire, was very popular between the 60's and 70's. While the GT6 was not produced in the same numbers, it is still a rather iconic car of that era and shares a lot of mechanical similarities with the Triumph Spitfire, which means that a similar conversion with the same equipment could be carried out with small effort. Not having to worry about interfacing with an existing Engine/Electric Control Unit (ECU) or other onboard systems meant that system design and overhaul were easier.

Figure 1. The Triumph GT6 Mk3 in its original state, before being converted [2]

As seen in Figure 1, the car was already in a good state so only minor rust repairs needed to be done.

3.1.1 Original Technical Specifications

The original GT6 that was converted had an inline 6-cylinder 2.0-liter engine with twin carburetors and a four-speed all-synchromesh manual transmission that produced a maximum power of 98 bhp at 5,300 rpm and a maximum torque of 147 Nm at 3,000 rpm. It had a 44-liter fuel tank and an overall consumption of 10.2 liters/100km, a calculated range of 390-431 kilometers and a top speed of 180 km/h, and was able to accelerate from 0 to 100 km/h in 10.1 seconds. The car was rear-wheel-driven and had a hypoid bevel rear differential with a ratio of 3.27-to-1. Its total curb weight was 918 kilograms and its laden weight was 1,123 kilograms and its weight distribution was 54.6% in the front and 44.4% in the back [3, p. 122-123]. The car cost GBP 1,254.38 [3, p.123] when new, which is approximately GBP 15,850 [4] or 19,989€ [5] in today's currency.

3.1.2 Original Electrical System

As can be seen from Figure 2, the original electrical system was very simple and only relied on three main glass fuses with two separate relays for hazards and indicators.

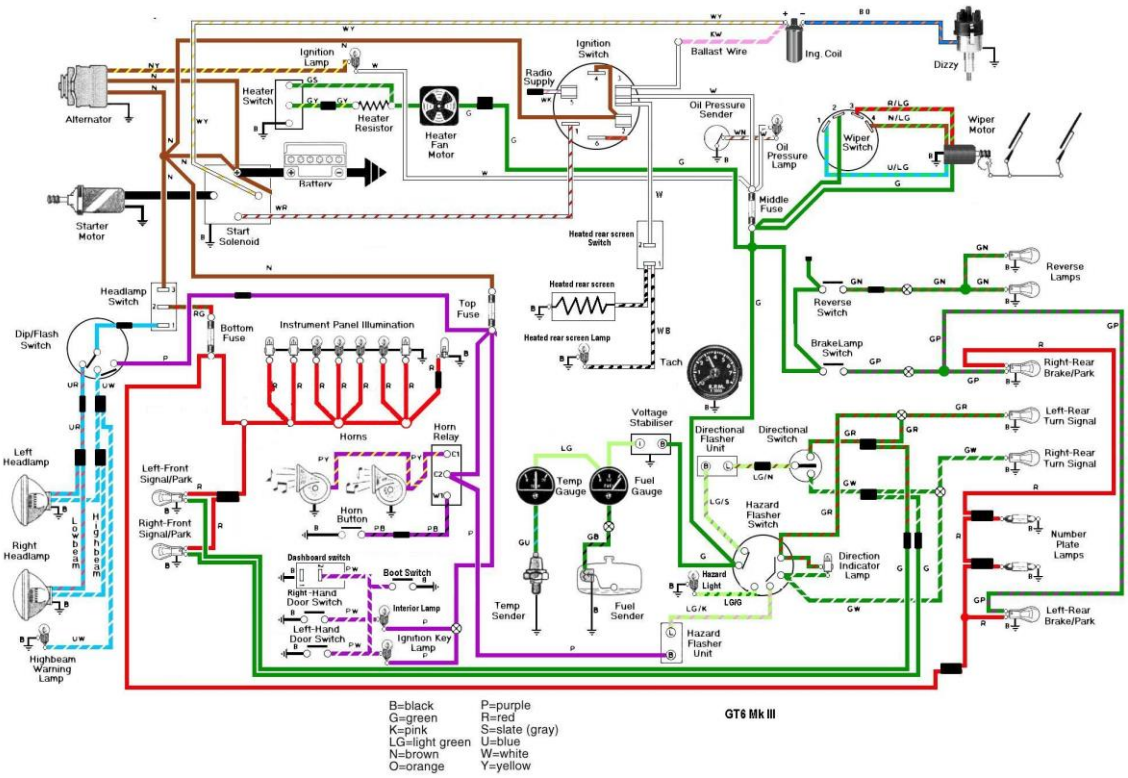

Figure 2. Original wiring diagram of the Triumph GT6 Mk3 [6]

Since the vehicle would still need its regular 12V system to supply power to the main ECU, or rather Vehicle Control Unit (VCU) as it is normally called in an electric vehicle, and all the lights and radio et cetera, it was decided that the electrical system would be completely redone.

3.1.3 Converted Technical Specifications

The original engine and gearbox were replaced with an electric motor and a reduction gear. The old propeller shaft and rear differential were kept intact, but the drive shafts connecting the wheels to the differential unit were replaced with custom drive shafts to handle the additional and constant torque generated by the electric motor. The ratio of the reduction gear was 1.98-to-1 and the rear differential was 3.27-to-1 so the final fixed ratio was 6.48-to-1 meaning that for one rotation of the wheels, the rotor of the motor needed to rotate 6.48 times. The brakes and chassis were kept mostly original apart for an additional reinforced section added to the rear of the chassis, to support the added weight of the rear battery pack that was placed in the trunk. The front shock absorbers and springs were replaced with fully adjustable coil overs so ride-height as well as stiffness could be adjusted. The rear leaf spring was kept original, but the rear shock absorbers were replaced with pneumatic absorbers that had ride-height adjustment through air pressure. As can be seen in Figure 3, the conversion was carried out with respect to the original bodywork. With the hood and panels closed the vehicle remains indistinguishable from the original GT6.

Figure 3. The Triumph GT6 Mk3 now converted to electric [2].

Furthermore, the charging connectors were also cleverly hidden as shown in Figure 4: the slow charging connector was installed under the old fuel cap and the fast charging connector behind the rear license plate with a hinge installed in it as well.

Figure 4. The top left image shows the slow charging connector, which is a Type 2-connector and the top right image shows the Type 2 –plug connected. The image below shows the revealed CHAdeMO-type fast charging connector [2].

The main goal was to try and match the performance specifications of the original car, so that major modifications to the chassis or upgrading of the brakes would not need to be made. The electric motor chosen was a hybrid synchronous alternating current (AC) motor (HSM) HSM1-6.17.12 made by BRUSA, capable of producing 70 kW of continuous power with a 96 kW maximum power output and a continuous torque of 130 Nm and a maximum torque of 220 Nm when coupled with the digital motor controller (DMC) DMC 524 [7]. After 4,000 RPM the motor delivers continuous power as can be seen in Figure 5. The HSM1-6.17.12 is a permanent magnet assisted reluctance motor (PMARM) that brings together the advantages of a permanent magnet synchronous motor (PMSM) and a synchronous reluctance motor (SynRM). The advantages of permanent magnet (PM) motors are high performance at nominal speed, high efficiency, compact size and controlling them is relatively simple. The disadvantage is that permanent magnets are rare and expensive. Also, above nominal speed a demagnetizing current needs to be fed to the motor to combat the resisting electromagnetic field (i.e. back EMF), which grows proportional to the motor rotational speed. This means the torque output of the motor is reduced. A reluctance motor does not include permanent magnet material on its rotor, making it cheaper to manufacture. This also means there is no demagnetization risk. Reluctance motors are also relatively simple to hybridize, meaning adding permanent

magnets in order to combine the best features of both motors. Since the rotor of a reluctance motor does not contain winding, the rotor does not heat in use, which makes the motor easier to cool [11, 12 p. 37-61].

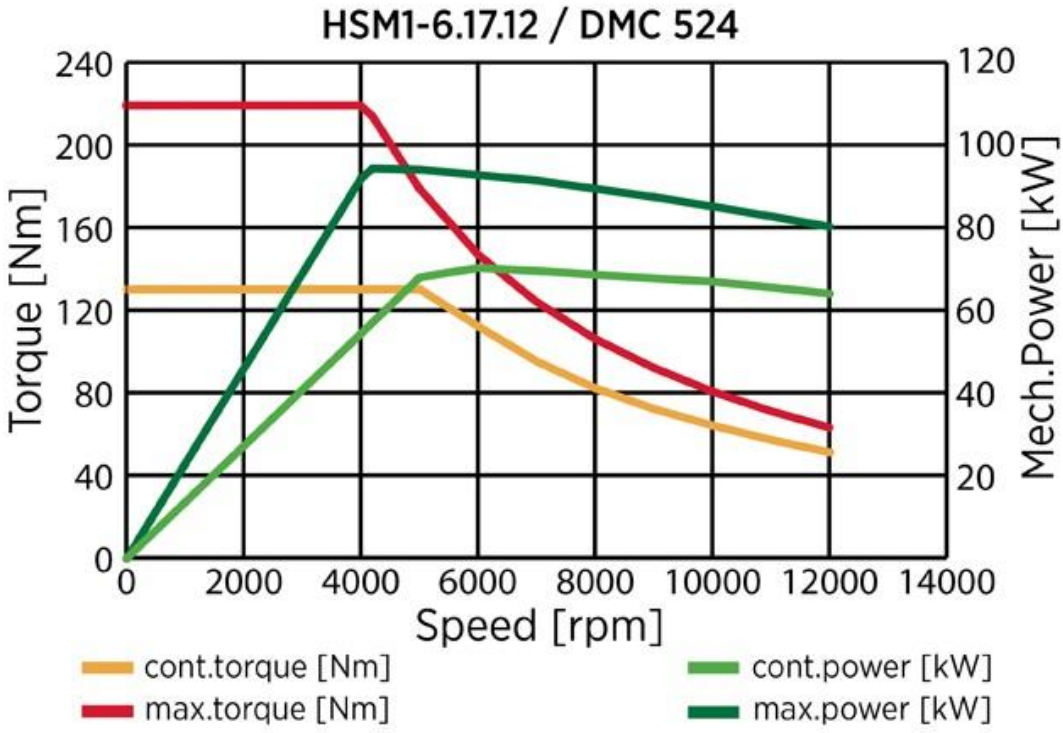

Figure 5. Performance curve showing how after 4,000 RPM the motor, coupled with the DMC 524 inverter operating at 400 V, delivers continuous power and diminishing torque output [7].

After the conversion the curb weight increased to 947 kg with a weight distribution of 47% in the front and 53% in the rear. Thus, the overall increase in weight was kept minimal and the weight distribution was brought closer to a 50-50 balance. The acceleration from 0 to 100 km/h decreased to 9 seconds and in general the car was far more responsive than the original. The car was outfitted with a 19 kWh battery pack made by Kokam. It is divided into two sections, one in the front and the other in the trunk. This brings the total range of the car to 150 kilometers with a charging time of 6 hours from empty to full with the onboard 3.7 kW NLG 513 slow charger. With direct current (DC) fast charging the charging time was brought to 40 minutes from empty to 80% battery capacity. As seen in Figure 6, the front battery pack along with the inverter, DC/DC-converter and electric motor coupled with the reduction gear fill the space left by the original 6-cylinder engine well.

Figure 6. From left to right: the DC/DC-converter, the inverter or motor controller and below the large red metal cover, the front battery pack and high voltage connector box [2].

The HSM coupled with the reduction gear was positioned directly below the DC/DC-converter and in fact, the assembly took up the space formerly taken by the transmission. The high voltage (HV) cables ran below the car parallel to the propeller shaft. Three aluminum plates were installed under the car to protect the HV cables from any external damage or wear.

The batteries and battery management system (BMS) used were manufactured by Ko-kam and the batteries were lithium nickel manganese cobalt (Li-NMC). Due to space constraints, seven battery modules of the type KBM216-14S connected in series were used. Each module consists of 14 cells of the type SLPB120216216 connected in series. The capacity of each cell was 53 Ah and since everything was connected in series that meant the total capacity of the battery pack was also the same. The minimum voltage of each module was 42 V, the nominal voltage 51.8 V and the maximum voltage 58.8 V as seen in Figure 7. This meant the voltage could theoretically go from 294 V up to 411.6 V with the nominal voltage being 362.6 V.

Specification

Item	Value		Remark
Cell Capacity	40 Ah	53 Ah	SLPB100216216H/ 120216216
Energy	2.07 kWh	2.74 kWh	@ C/5 discharge 23± 3℃
Weight (Approx.)	19.0 kg	22.0 kg	
Minimum Voltage	42.0 V		
Nominal Voltage	51.8 V		
Maximum Voltage	58.8 V		
Max. Continuous Charge Current	40A (1C)	53A (1C)	@ 23± 3℃
Max. Continuous Discharge Current	40A (1C)	53A (1C)	
Peak Discharge Current	120A (3C)	159A (3C)	< 10sec, > SOC 50%
Module Dimension	Width	9.64 inch (245 mm)	
	Height	11.22 inch (285 mm)	
	Depth	8.03 inch (204.2 mm)	
Available Operating Temperature	Charge	0 ~ 10 ℃	< 0.3C
		10 ~ 30 ℃	≤ 2.0C
		30 ~ 40 ℃	< 1.0C
	Discharge	-10 ~ 55 ℃	
Available Storage Condition	1 year	-20 ~ 25 ℃	@ 60± 25% R.H. SOC 50± 5%
	3 months	25 ~ 40 ℃	
	<1 week	40 ~ 55 ℃	

Figure 7. Specifications of the KBM216-14S battery modules that were used. The relevant values are on the right side under the 53 Ah value [13].

The specifications in Figure 7 state the maximum and minimum voltage per battery module, but in order to extend battery life and also prevent damage to the battery the maximum and minimum voltages actually used when operating the vehicle were different. The minimum voltage given in the specification is calculated by using a minimum voltage of 3 V per cell, the nominal at 3.7 V per cell and maximum at 4.2 V per cell. The minimum voltage value used was kept the same, since especially at lower state of charge (SOC) a sharp acceleration or otherwise heavy load can cause the cell voltage to momentarily drop sharply. The minimum voltage also means that discharging is prevented from that point on and discharge current is derated even before that to prevent damage to the battery. Discharging below the minimum voltage is called deep-discharging and charging above the maximum voltage is called over-charging. The maximum voltage allowed was

set to 4.12 V per cell which equals 57.68 V per module. The reason for this is due to the characteristics of lithium-ion batteries. Deep-discharge and over-charge cause heavy stress for the batteries, which leads to rise in cell temperature. In the worst case that can even lead to an event called thermal runaway, where a cell's temperature from some point forward begins to rise uncontrollably. The exact temperature is different for cells of different chemistry. Thermal runaway causes the internal pressure of the cell to rise, the cell to expand and even burst into flames or explode [14, 15, 16]. To manage the cell temperatures and cell voltages the discharge current as well as the charge current were derated as temperatures were too low or too high or cell voltages were too low or high or if there was a continuous high current discharge. The specifications mention the allowed continuous discharge and charge currents, as well as the peak discharge current, which are given in both amperes and C-rates. C-rates are related to the capacity of the battery: since the capacity of the battery installed in the vehicle is 53 Ah, that means 1C is 53 A. Furthermore, the 53 Ah rating means that the battery can deliver 53 A for one hour at the discharge rate given by the manufacturer. Raising the discharge current and thus the C-rate to 2C, meaning 106 A, the same battery can theoretically provide that current for half an hour [17]. It is also noteworthy that the peak discharge current is usually limited to a 10 s pulse and is available only when battery SOC is above 50 %.

3.1.4 Electrical System of the Converted Vehicle

As mentioned in chapter 3.1.2, it was decided that the original 12 V system of the vehicle would be taken apart completely and a new more modern and safe electrical system put in place. Failing to find a suitable preconfigured, or universal, "bolt-on" wiring system, the system was designed from ground up and all the wiring was done by hand. The new system was based on the original wiring diagrams and can be seen in Appendix 1. The design was carried out with the assistance of students Sami Tirkkonen and Janne Hulkkonen. Janne Hulkkonen was also part of the team converting the vehicle.

When starting to plan the new system, it was clear that requirements for the system needed to be mapped in advance. Since all the lights, switches and instruments remained the same as the original, there was already a framework for the system. The system used a number of relays to control loads such as the headlights, cooling fan, rear window demister and horn to name a few. One of the main challenges faced was the

placement of the fuse and relay assembly, since there were simply not many conceivable places to install everything. Finally, a decision was made to place the fuse and relay assembly on the right-hand-side of the passenger footwell. As seen in Figure 8, the fuse and relay assembly was quite simple in its design and implementation. The VCU was also placed on the passenger side on the firewall directly behind the 12 V battery. One of the factors considered when choosing the 12 V battery was its dimensions, so it would fit in the designated place and also more importantly the ability to be deep cycled, meaning the voltage of the battery can drop low without drastic results on the battery life, as well as being able to deliver a high discharge and charge current [8, 9, 10]. An absorbed glass mat (AGM) battery manufactured by Haze Batteries was selected to power the 12 V system due to the advantages of using an AGM battery such as being maintenance free, having a low self-discharge level and internal resistance and a long service life.

Figure 8. The fuse and relay assembly with the main relay and vehicle side connectors removed. The two circular metallic objects on the top right are the indicator and hazard relays respectively, used in classic cars.

As is visible from Figure 8, the expandability of the assembly was somewhat limited. The packaging could also have been done better, but especially due to time constraints, an easy and fast solution needed to be executed. The main fuse for the low voltage (LV)

system was connected between the battery terminal and the lead that powers the assembly. The main fuse was 50 A and there was also a fuse between the DC/DC-converter and 12 V battery that was 300 A. One of the problems faced during wiring, was that even though the connections had been planned, the routing was done on the spot. This led to problems when new devices were added to the vehicle because routing had to be rethought every time. Also, the lack of specific planned grounding points meant that ground wires were erratically placed and the end result of the wiring was very chaotic. Later during the development of the vehicle a second rewiring project was undertaken to try and make the routing more sensible. During the second rewiring project, plans were made for future improvements to the LV system in order to further improve on its reliability.

4 The Control System

4.1 Planning the Control System

As stated earlier in the introduction, a key aspect in the control system was for it to be as unobtrusive as possible. The idea was that when a person steps into the car, that person would not be able to distinguish between the converted vehicle and the original. In other words, the original instruments and switches needed to look exactly like the original. The instruments and dash also featured warning and indicator lights that were repurposed to indicate other things, most of which meant that a new type of driver's manual would also need to be written for the driver to know what a static or flashing light was there to indicate. Since the original warning lights were not very extensive in their communication of different types of faults, a single warning light needed to be able to communicate at least two types of faults and with different flashing frequencies, even more could be indicated. However, since deciphering different frequencies of flashing did not seem like an intuitive approach, a static or flashing warning light was used. The vehicle also had a temperature and fuel gauge that were used to indicate the coolant temperature and battery SOC respectively.

4.2 General Overview of the System

At the heart of the control system was the VCU that received all sensor inputs and designated digital inputs as well. It handled communication between devices and controller area network (CAN)-buses as well as performing calculations related to the control system. The layout of the control system and CAN-buses is displayed in Figure 9.

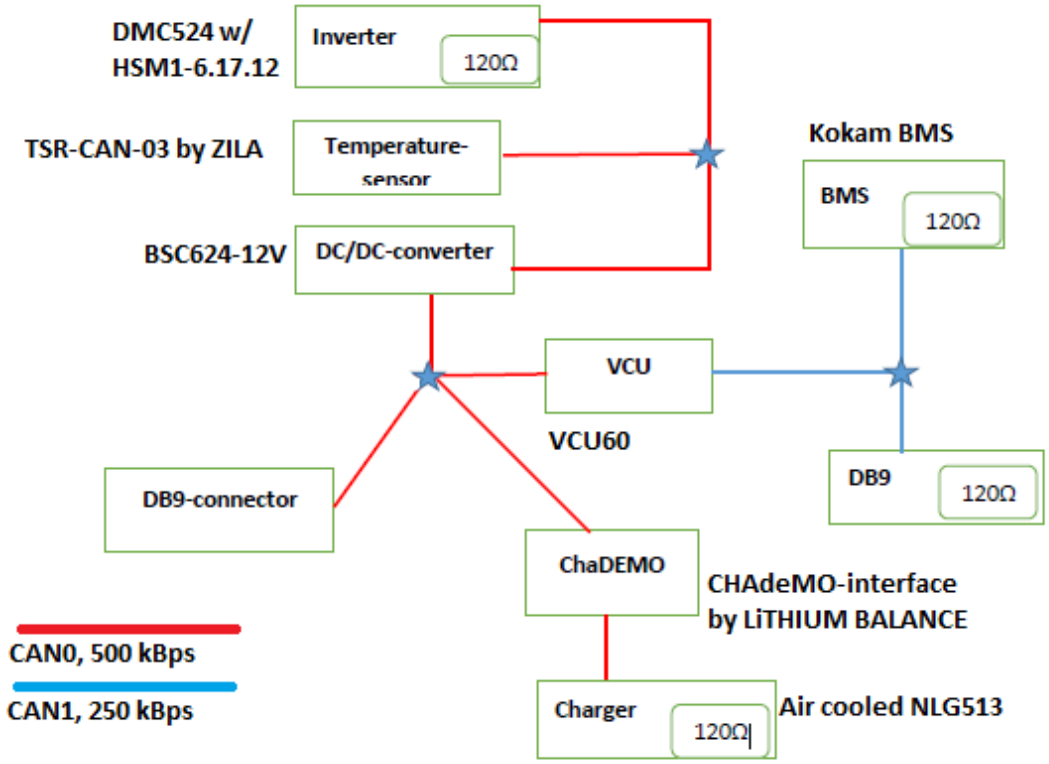

Figure 9. Layout showing how all the devices are connected to each other in the CAN-bus. The stars represent star points, i.e. a point that has multiple CAN-lines diverging from it.

The layout does not show the HSM, since that is not directly connected to the CAN-bus. Instead the motor controller DMC 524, that handles direct communication with the motor, is shown. The DMC relays requests from the VCU and motor information from the motor to the VCU. The DMC also handles derating, limiting and cutting power to the motor in situations that require it. The motor is discussed in more detail in chapter 3.1.3. The VCU, DMC, Bidirectional Supply Converter (BSC) (i.e. DC/DC-converter), BMS, slow charger NLG 513 and CHAdeMO-interface will be discussed in further detail in the coming chapters. The TSR-CAN-03 is a CAN-bus capable coolant temperature sensor made by ZILA that is connected to the coolant outlet of the inverter that leads to the motor. Each CAN-

bus has its own D-subminiature (DB9) connector and the serial connection for BMS communication also has its own DB9 connector. CAN0, depicted in red in Figure 9, represents the traction network and the 120 ohm CAN-bus resistors are located in the inverter and the other one in the charger, so the CAN-bus starts from the inverter and ends at the charger. The BMS has its own slower CAN-bus, depicted in blue in Figure 9, with the resistors located at the BMS and the other one just before the DB9 connector. The weights of the powertrain components are as follows:

- DMC: 9.5 kg
- HSM: 51.5 kg
- BSC: 4.8 kg
- Battery: 133 kg (19 kg per module) plus battery boxes.
- NLG: 6.3 kg

The weight of the powertrain components is thus 205.1 kg excluding the battery boxes, the weight of the HV cables, the liquid cooling system for the powertrain and the HV distribution box, which is roughly 6 to 8 kg. The devices (e.g. VCU, temperature sensor) not mentioned in the list above are negligible in weight and can be rounded to 2 kg in total.

4.2.1 Vehicle Control Unit

The controller used is a VCU60 by BRUSA that is based on a TTC60 controller made by TTControl. It supports the CoDeSys-programming language, which is widely used in industrial and automation applications and is based on the IEC 61131-3 standard [18, 19]. It has support for two CAN connections and more importantly support for the CANopen-standard. It also provides support for a serial connection through the RS-232-standard and local interconnect network (LIN) support but these connections were not used. It also has 40 programmable input / output (I/O) points with 8 points supporting pulse width modulation (PWM) and others supporting digital inputs and outputs and analog inputs. It also has two dedicated 5 V sensor supplies and a variable sensor supply with support for 8.5 V, 10 V and 14.5 V and ground reference pins for analog sensors [20, 21]. The control system uses one CAN-bus for the powertrain components and the other CAN-bus for the Kokam BMS and the VCU acted as an intermediary to pass information from one CAN-bus to the other.

4.2.2 Digital Motor Controller

The DMC 524 coupled with the HSM1-6.17.12 make up the actual motor unit and the motor is driven by the DMC. The torque request, speed limit and rotation direction are passed by the VCU, which reads the accelerator pedal and driving direction switch, to the DMC. The motor communicates its temperature and rotor position to the DMC that relays the information to the CAN-bus. The rotation speed is limited when reversing and the torque is derated when reaching and nearing the speed limit. The DMC 524 is capable of running different types of three-phase motors, be they HSM or asynchronous motors (ASM) [22, 23]. The motor parameters are fed into the DMC through BRUSA's software. The DMC 524 supports continuous power of 79 kW and a maximum power of 105 kW, with a peak current of 300 A_{AC} and continuous current of 225 A_{AC} [22, 23].

4.2.3 Bidirectional Supply Converter

The BSC624-12V DC/DC-converter converts the HV to 12 V in order to charge the 12 V battery and also supply the LV system. In general, there are two systems in EV's: one is the HV system which powers the powertrain components, a converter that converts the HV into LV, and possibly some kind of an HV heater. The HV is always isolated from the grounds of the vehicle to prevent an electric shock from happening since there are always large currents at play as well as a high voltage. An insulation monitoring system (IMS) is usually implemented to constantly measure the insulation between HV and the grounds of the vehicle. The LV system powers the powertrain components, the VCU and other possible electronic controllers as well as all the lights, radio and other things one would find in an ICE vehicle. The reason for this is that most electronics equipment cannot handle higher voltages directly and some cannot handle voltages above 3.3 V or 5 V. In these cases, the higher voltage is regulated to a lower voltage that the device can handle. Also 12 V is almost universal in passenger vehicles as most automotive systems are built for it. The purpose of a converter is that it can supply the entire LV system, so one could actually remove the 12 V battery from the middle when the system is running. Of course, as soon as the system would be powered off, it would cause immediate problems. The BSC624 is capable of operating at input voltages from 220 V to 450 V delivering an output voltage of 8 to 16 V and being able to deliver 200 A of continuous current and 250 A maximum current at the nominal 14 V. It also supports a boost and buck mode as well as a CAN-less mode, although the converter is controlled through CAN in this application [24, 25].

4.2.4 Battery Management System

Kokam's BMS was provided as is. It featured a master BMS and HV-distribution box as well as a slave BMS in each battery module to provide cell voltages and temperatures and overall module voltage. The BMS had support for one CAN-bus and also a RS-232 connection to provide monitoring through their own proprietary software. At first, it was planned to have all the devices on one CAN-bus, since the number of devices and CAN messages on the bus meant its load would not be heavy. However, Kokam's BMS used extended CAN messages with 29-bit identifiers and bit rate of 250 kilobytes per second (kBps) that was not compatible with the rest of the powertrain components that used standard CAN messages with a bit rate of 500 kBps, which forced to use separate CAN-buses for the BMS and powertrain as discussed earlier in chapter 4.2. The purpose of the BMS is to monitor the state of the battery at all times and prevent damage to the battery if preset limits are crossed by ultimately cutting the battery off from the rest of the HV system. The BMS is also responsible for balancing cell voltages whenever the battery current is low enough and the cell voltages are not within limits. If the difference in cell voltages increases too much, the BMS prevents charging and discharging completely and focuses on bringing the cell voltage difference back to within preset limits.

4.2.5 BRUSA Slow Charger NLG

The charger used is a NLG 513 air cooled model from BRUSA. It offers an automatic operation mode, a preprogrammed operation mode and CAN-controlled mode and in this application it was controlled via CAN-bus. It is capable of delivering a maximum power of 3.7 kW with an input voltage range of 100 to 240 V meaning it can be used all over the world. Its maximum input current is 16 A and input voltage frequency range is 48 to 62 Hz. It can output 200 to 520 V and supply a maximum charging current of 12.5 A [26, 27]. It is also possible to connect multiple chargers in parallel to increase the charging power. The charger was installed next to the rear battery pack in the trunk. A wooden lid, covered with embroidered cloth was installed on top of the trunk area to make it more aesthetically pleasing. The charger had two fans that pulled in cool air and exhausted the hot air from the back. Since the charger was effectively in a closed space that meant it would start to circulate the same hot air in the confined space. To resolve this problem, an existing hole on the bottom left side of the trunk, which was earlier used to provide venting for the gas tank, was made larger and an air filter was installed below it. A custom made aluminum sleeve was installed in front of the fans of the charger to create a

stronger vacuum effect and a flexible air tube leading to the hole on the bottom so the charger could pull in cold air from under the car and expel it to the trunk area. During wintertime, this can provide heating for the cabin.

4.2.6 CHAdeMO Fast Charging Interface

The CHAdeMO fast charging interface provided by LiTHIUM BALANCE featured two CAN-buses, one dedicated to CHAdeMO CAN-bus interaction and the other to connect to the vehicles CAN-bus. The interface is fully compliant with the CHAdeMO standard v1.0.1. The vehicle side CAN-bus provides the interface with limits to charging current, charging voltage and the target SOC. The interface is designed to be compatible with any battery pack and enables easy integration into an existing EV system [28, 29]. As discussed earlier in chapter 3.1.3, lithium-ion batteries can be severely damaged and become dangerous when overcharged or discharged too deep. For that reason, most battery systems scale the shown SOC so the entire capacity and voltage range of the battery is not actually used. When an EV reports its SOC to be 100 %, it can actually be 90 % of the capacity of the battery. This is done to prolong the battery life and also protect the battery. When looking at a constant current / constant voltage (CC/CV) charging curve shown in Figure 10, a charging method most used when charging especially single cell lithium batteries, one can see that the capacity of the battery rises rapidly when charging the battery from empty to around 83 % SOC.

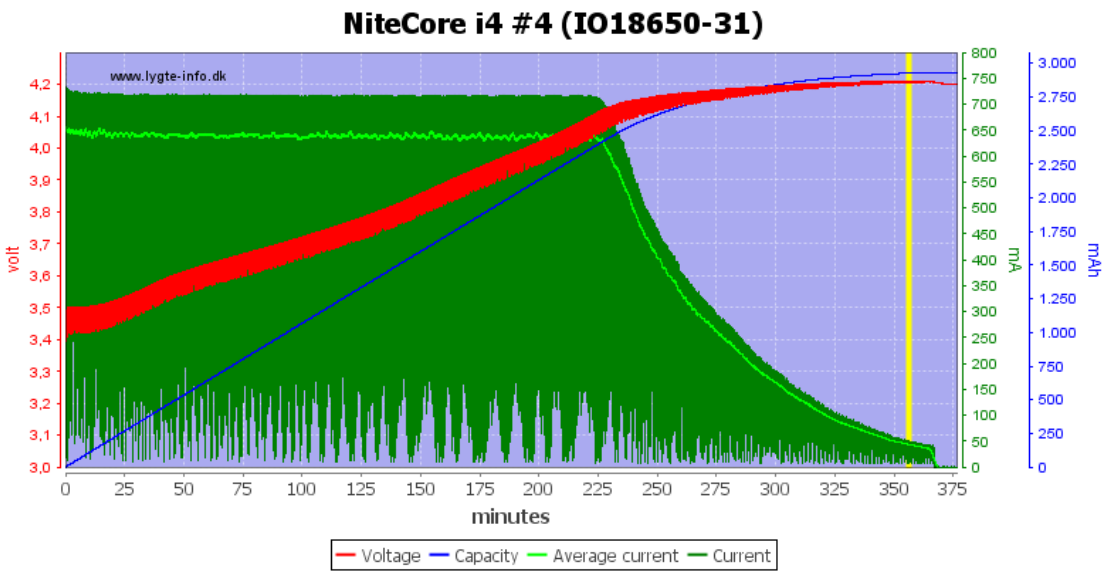

Figure 10. CC/CV charging curve for an 18650 lithium ion battery cell [30].

The charging process starts with a constant current that allows the voltage to rise until a certain voltage is reached. After the voltage of the battery cell reaches a certain level defined by the chemistry of the cell, the charging proceeds by setting a constant voltage and letting the current drop. When the current drops to zero or close to it, the charging process is stopped. Because charging after a certain voltage level takes a considerable amount of time, fast chargers are usually either preset to stop at 80 % (i.e. the voltage level when charging current begins to drop considerably) or allow the user to set a target SOC. If the charging current is not lowered after the voltage is near the full voltage of the battery, the battery begins to heat faster due to the internal resistance growing which shortens the battery life. Battery systems with multiple cells also have to consider the difference in cell voltages and temperatures.

4.3 Functions of the Control System

As with all modern vehicles, there are multiple control systems that have independent functions from each other. Typically, there is also a master level control system that is capable of turning off other non-vital control systems in case a fault is detected or the power supply system becomes jeopardized for instance in an ICE by the engine driven charger breaking or in an EV if the DC/DC-converter fails. The general rule is that the vehicle needs to be able to be driven to a service center if some type of failure is detected unless the failure is directly related to the driving capability (i.e. engine or motor failure). During this thesis, the function of all control systems needed to be designed and conceptualized. The electrical system of the vehicle could also be thought of as a low level control system (in control systems, high level means a more visible type of control relying on the low level system, while low level control infers the essential things to make something work) since it supplies electricity to all controllers and devices, in essence making it possible for them to work. That meant that the electrical system needed to be as reliable as possible.

On the other hand, the control system consisted of the electrical system which passed electricity from the LV supply to devices needing it either through the use of switches or having certain devices such as the VCU directly connected to the supply. Switches either transferred the electricity directly to a device or through the use of a relay. Relays controlled heavier loads such as the rear window demister, horn, lights, hazard and indicator lights etc. Thus, at its core the electrical system was very simple and had no ability to

communicate faults on its own apart from something simply not functioning. The VCU was tasked with having a fully functioning EV. As stated before, it acted as a gateway between the BMS and traction network (powertrain components), read important CAN-messages from each device, sent control messages to devices needing them, read digital inputs, analog inputs by sensors, supplied a regulated voltage for sensors and supplied digital outputs as well. Figure 11 depicts the startup procedure of the vehicle when the driver turns the ignition key.

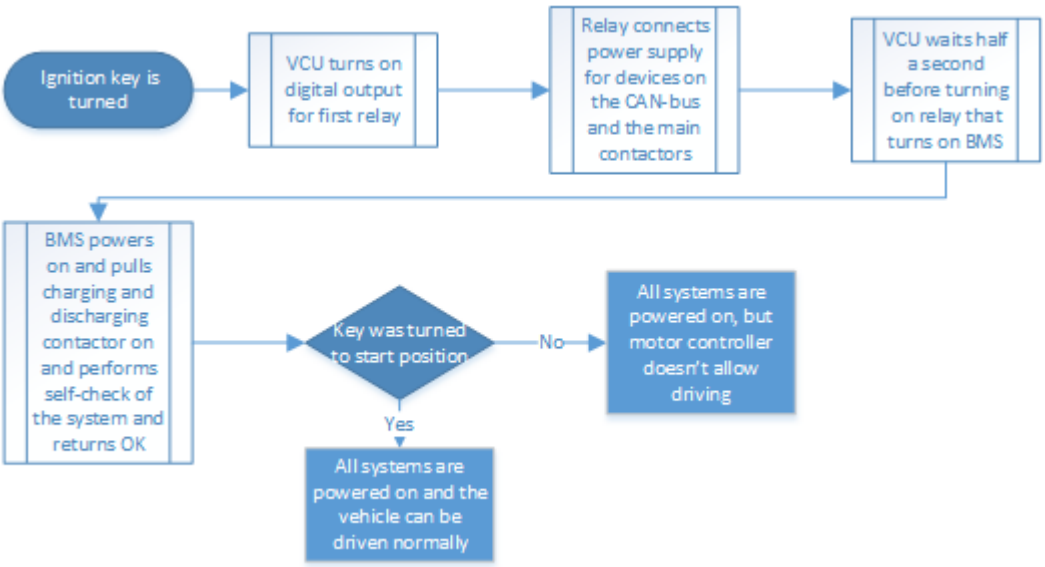

Figure 11. Flow chart showing the different steps needed to take to drive the vehicle and the process performed by the VCU.

As discussed earlier in the introduction and chapter 4.1, different warning lights needed to be repurposed to indicate faults relevant to the vehicle. All the devices connected to the CAN-bus were capable of performing self-diagnostics and then relaying status messages through their respective CAN-messages. This meant it was easier to simply read the different statuses of the devices and then act upon that information. The dashboard only featured seven lights in total, as shown in Figure 12.

Figure 12. The top left instrument is the speedometer that has a light for the main beam, oil and ignition. The gauge in the middle is the tachometer that has the turn indicator light and a demist light. The picture below with the fuel and temperature gauges also feature two lights beneath both gauges.

Since there was no engine oil at use in the system, even though the reduction gear and rear differential both used gear oil for lubrication, the oil warning light was used to indicate a ground fault. The ignition light would flash when starting the car up and would show a static light if there was a problem indicated by the motor controller. The lights in the tachometer were kept the same, since those were still used in the normal fashion. Originally, the light under the fuel gauge indicated empty fuel and flashed when the hazard lights were on. It was repurposed to flash when the LV supply was under 12 V, the DC/DC-converter was not running, or if there was a fault or warning indication of over current, over voltage or under voltage from the BMS. A static light was kept to indicate low SOC. The light under the temperature gauge was used to indicate coolant overheating under normal driving conditions and also to indicate the slow charger overheating when charging when the light was constantly on. When the light flashed, it was used to indicate a warning or fault of cell over temperature or under temperature signaled by the BMS. A proprietary system was developed to control the gauges, although their function remained the same as before.

The original accelerator pedal used a throttle cable connecting the pedal to the two carburetors on the engine and moving the throttle valves within the throttle bodies. This was replaced with a modern electronic throttle pedal that had two pedal position sensors. The pedal was connected to the 5 V sensor supply of the VCU, the vehicle ground and the sensor signals were read through the analog inputs of the VCU. The signals have a different range but the same linearity, in order to enable the detection of a fault or a failure of the throttle pedal. The signals are constantly read and checked against one another to determine if there is a problem. If the signal values are too far apart then the status of the pedal is read as “not ok” and driving is effectively disabled. Only one of these signals is used for driving. The signal value was scaled and the accelerator output was exponential instead of linear since an exponential throttle response provides a more natural feeling driving experience. In contrast, a linear scale would make the car feel touchy. The exponential accelerator value, a value between zero and one, was multiplied with the maximum allowed torque output of the motor (220 Nm). After that, it was integrated to prevent the value going from zero to 220 Nm instantly to prevent damage to the powertrain. After that, the value was processed through a limiting function, which used data from the BMS and powertrain to limit the requested torque and that torque was then sent to the DMC as a torque request, which it then processed internally to achieve the maximum possible torque output requested. The accelerator also had a twofold operation where the very beginning of the pedal motion was reserved for use with regenerative braking. After that portion, there was a small window with zero output to enable coasting before the accelerator began to accumulate positive values. In other words, when depressing the pedal very slowly there was a portion of the motion where nothing happened and after that the car began to accelerate. When raising the pedal beyond the coasting portion, the pedal begins to accumulate negative values that act as a multiplier for negative, or regenerative, torque. Even if there are no battery limitations for achieving a certain discharge current and torque, the DMC can still limit the request based on its internal parameters and the rotation speed of the motor. The DMC is capable of two modes of operation:

- Torque mode
- Speed mode

In torque mode, the DMC is provided a speed request parameter in its control message that acts as a speed limit for the motor. That means the DMC will limit torque when nearing the set rotation speed to prevent exceeding it. The driver uses the accelerator

pedal to request torque from 0 to 100 %. In speed mode the torque request parameter of the control message acts as a torque limit, meaning the DMC will prevent exceeding the set torque. The driver then uses the accelerator pedal to request a motor rotation speed. Scaling of the accelerator pedal would be trickier since the maximum speed of the motor is 12.000 RPM. With the fixed 6.48-to-1 ratio, a rotation speed of 1000 RPM is approximately 16 km/h calculated from the formula:

$$v = \frac{2\pi R_d \cdot RPM \cdot 60}{1000 \cdot i_p} \tag{1}$$

where v means speed in km/h, R_d stands for the dynamic radius of the wheel, RPM stands for the rotational speed of the motor in rotations per minute and i_p stands for the ratio of the powertrain. The dynamic radius is, as the name implies, a constantly shifting value affected by the temperature, friction and rotational speed, among other things, of the wheel. An estimation can be calculated from the formula:

$$R_d = \frac{\frac{D}{3}}{2} \tag{2}$$

where D stands for the rolling diameter of the wheel. A speed controlled motor is often found in circular saws for example where it is important for the speed to remain constant but the required torque may vary depending on the load placed on the motor. In automotive applications a torque controlled motor is what most drivers are accustomed to and what, although subjectively, provides a more natural feeling experience. The DMC was set to function in direct torque control mode in the converted vehicle.

A sensor was also installed on the brake pedal to enable reading the brake pedal position with the VCU. The sensor used was a chassis level sensor that is normally used in modern cars with xenon lights for instance. The lights are automatically adjusted with the help of multiple level sensors underneath the car to determine if the lights are pointing too high or too low and to provide optimum visibility for the driver. A modern level sensor as well as the sensors within the electronic accelerator pedal typically use a Hall Effect sensor which means the sensor virtually never has wear related failures since there is no physical contact. The original brake pedal had a lot of travel, which meant there was a significant portion of the pedal motion where the brakes were not actuated but instead the pedal had to be pushed fairly deep for the brakes to engage. The entire motion of the brake pedal was used to act as a multiplier to intensify regenerative braking. Because

an electric motor is capable of using the same maximum torque for output and regeneration, limiting the maximum torque allowed for regeneration is necessary to avoid dangerous situations, especially when the motor is driving the rear wheels of the car as in this case.

4.4 Future Improvements to the System

As discussed earlier in chapters 3.1.4 and 4.3, the basic electrical system of the vehicle needed to be as reliable as possible. For that reason, the original wiring was removed and a new system designed and put in its place. However, due to time constraints and lack of experience leading to poor planning, the wiring of the system was chaotic and led to a second rewiring project later on. The routing of the wires was then made more consistent, excess wires were cut down to proper sizes and grounding points were utilized better. It became evident that the second rewiring project was simply not enough to make the LV system consistently reliable and especially less chaotic, and that additions to the system such as new devices would require significant effort. Also, issues with interference to the I/O-signals of the VCU were detected, further pushing for the need for more improvements. Therefore, the use of CAN-bus controlled I/O-modules was conceptualized. Instead of having wires run back and forth, from switches to the supply system to the controlled system, an I/O-device could use the switches as digital inputs and run low loads such as lamps directly and higher loads through relays. Having CAN-bus capability would also mean that diagnostics of the LV system could easily be implemented. This would also mean that the LV system would have to be redesigned once more and most of the wiring would have to be redone even though small parts of it could still be used.

5 Summary

5.1 Challenges Faced

The biggest challenge that was faced during this thesis was lack of experience in designing electrical systems and also having no proper prior experience with programming. Another challenge was the mechanical integrity of the original vintage parts: multiple switches needed to be replaced because the mechanisms quite simply failed under normal usage. Most parts were also clearly not designed to be repaired. A common electrical

problem with vintage vehicles was also poor grounding that required assistant grounding to be installed in certain places. Even though there were severe time constraints especially during the end-period of the thesis, the experience in itself was extremely rewarding and helped accumulate much needed experience and knowledge.

5.2 Conclusion

The end result of the thesis was a successfully working control system that enabled simple and easy driving of the vehicle, protection of the vital battery system and the communication of warnings and fault to the driver to the extent made possible by utilizing the existing instruments. While the LV system was not perfect in its implementation, it still served its function. Multiple development ideas were conceived and new iterations will be worked on in the future.

References

1 e-Drive Retro crowdfunder site [WWW-document]. https://www.crowd-funder.com/e-drive-retro (read on the 22nd of March 2016)

2 Image courtesy of e-Drive Retro OÜ

3 Triumph GT6 Gold Portfolio 1966-1974, Compiled by R.M. Clarke, Brooklands Books Ltd October 21, 1994 ISBN 1 85520 2441 (read on the 23rd of March 2016)

4 This is MONEY. *Historic inflation calculator: how the value of money has changed since 1900.* [WWW-document] http://www.thisis-money.co.uk/money/bills/article-1633409/Historic-inflation-calculator-value-money-changed-1900.html (read and used on the 24th of March 2016)

5 XE Currency Converter [WWW-document] http://www.xe.com/currencycon-verter/convert/?Amount=15850&From=GBP&To=EUR (read and used on the 24th of March 2016)

6 Spitfire & GT6 Magazine. *Wiring Diagrams, GT6 Mk III modified by Tom O'Malley* [WWW-document] http://www.triumphspitfire.com/images/wiring/GT6MkIIIwir-ing.jpg (read on the 4th of May 2016)

7 BRUSA product page for HSM1-6.17.12 electric motor [WWW-document]. http://www.brusa.biz/en/products/drive/motor-400-v/hsm1-61712.html (read on the 29th of April 2016)

8 BU-201a: Absorbent Glass Mat (AGM) *Learn what differentiate AGM from other lead acid battery types* [WWW-document] http://batteryuniversity.com/learn/arti-cle/absorbent_glass_mat_agm (read on the 9th of May 2016)

9 AGM – ABSORBED GLASS MAT BATTERY TECHNOLOGY. *ABSORBED GLASS MAT BATTERIES* [WWW-document] http://www.solar-electric.com/agm-battery-technology.html (read on the 9th of May 2016)

10 AGM Batteries product page [WWW-document] http://www.optimabatter-ies.com/en-us/technology/agm-batteries/ (read on the 9th of May 2016)

11 Esra Kandemir Beser, Sabri Camur, Birol Arifoglu and Ersoy Beser (2012), *Anal-ysis and Application of a Hybrid Motor Structure Convenient to Modify the Magnet and Reluctance Torques on the Rotor*, Journal of Electrical Engineering & Tech-nology Vol. 7, No. 3, page. 349-357, 2012. (Read on the 9th of May 2016)

12 Lauri Hietalahti, *Sähkökäyttö- ja hybriditekniikka ajoneuvo- ja työkonekäyttöön.* Tampere: Tammertekniikka, 2001. ISBN 978-952-5491-71-5 (read on the 29th of May 2016)

13 Kokam Battery Module brochure and datasheet [WWW-document] http://kokam.com/wp-content/uploads/2016/03/Kokam-Battery-Module-216-Series-Brochure1.pdf, page 2 (read on the 10th of May 2016)

14 BU-409: Charging Lithium-ion. *Find out how to prolong battery life by using correct charge methods.* [WWW-document] http://batteryuniversity.com/learn/article/charging_lithium_ion_batteries (read on the 14th of May 2016)

15 BU-501a: Discharge Characteristics of Li-ion. *Learn about the difference of energy and power requirements in a battery.* [WWW-document] http://batteryuniversity.com/learn/article/discharge_characteristics_li (read on the 14th of May 2016)

16 Maxim integrated application note 3958. *Battery Fuel Gauges: Accurately Measuring Charge Level by Reinhardt Wagner.* [WWW-document] https://www.maximintegrated.com/en/app-notes/index.mvp/id/3958 (read on the 14th of May 2016)

17 BU-402: What Is C-rate? *Charles-Augustin de Coulomb's C-rate for batteries* [WWW-document] http://batteryuniversity.com/learn/article/what_is_the_c_rate (read on the 14th of May 2016)

18 CODESYS Development System. Product page [WWW-document] https://www.codesys.com/products/codesys-engineering/development-system.html (read on the 22nd of March 2016)

19 CoDeSys system. Product page. *General Overview, Why CoDeSys?* [WWW-document] https://www.codesys.com/the-system.html (read on the 22nd of March 2016)

20 VCU60 product page [WWW-document] http://www.brusa.biz/en/products/system/vehicle-control-unit/vcu60.html (read on the 29th of April 2016)

21 VCU60 datasheet provided by BRUSA [WWW-document] http://www.brusa.biz/_files/drive/05_Sales/Datasheets/TTControl-TTC_60-Datasheet.pdf (read on the 29th of April 2016)

22 DMC 524 product page. [WWW-document] http://www.brusa.biz/en/products/drive/controller-400-v/dmc524.html (read on the 29th of April 2016)

23 DMC 524 datasheet. [WWW-document] http://www.brusa.biz/_files/drive/05_Sales/Datasheets/BRUSA_DB_EN_DMC5.pdf (read on the 29th of April 2016)

24 BSC624-12V product page [WWW-document] http://www.brusa.biz/en/products/dcdc-converter/hvlv-400-v/bsc624.html (read on the 29th of April 2016)

25 BSC624-12V datasheet [WWW-document] http://www.brusa.biz/_files/bsc/BSC6/Customer_data/1_Manuals/BSC6_Datasheet_EN.pdf (read on the 29th of April 2016)

26 NLG513 air-cooled charger product page [WWW-document] http://www.brusa.biz/en/products/charger/charger-400-v/nlg513-air.html (read on the 29th of April 2016)

27 NLG513 datasheet [WWW-document] http://www.brusa.biz/_files/drive/05_Sales/Datasheets/BRUSA_DB_EN_NLG513.pdf (read on the 29th of April 2016)

28 LiBAL Fast charge interface product page [WWW-document] http://www.lithium-balance.com/en/component/product/categories/20?sid=46 (read on the 29th of April 2016)

29 LiBAL Fast charge interface datasheet [WWW-document] http://www.lithiumbalance.com/attachments/product/5_Datasheet_FastChargeInterface%20CHAdeMO.pdf (read on the 29th of April 2016)

30 Charger SysMax/NiteCore Intellicharger i4 V2 review [WWW-document] http://lygte-info.dk/review/Review%20Charger%20SysMax%20i4%20V2%20UK.html (read on the 18th of May 2016)

12V Wiring diagram after the conversion

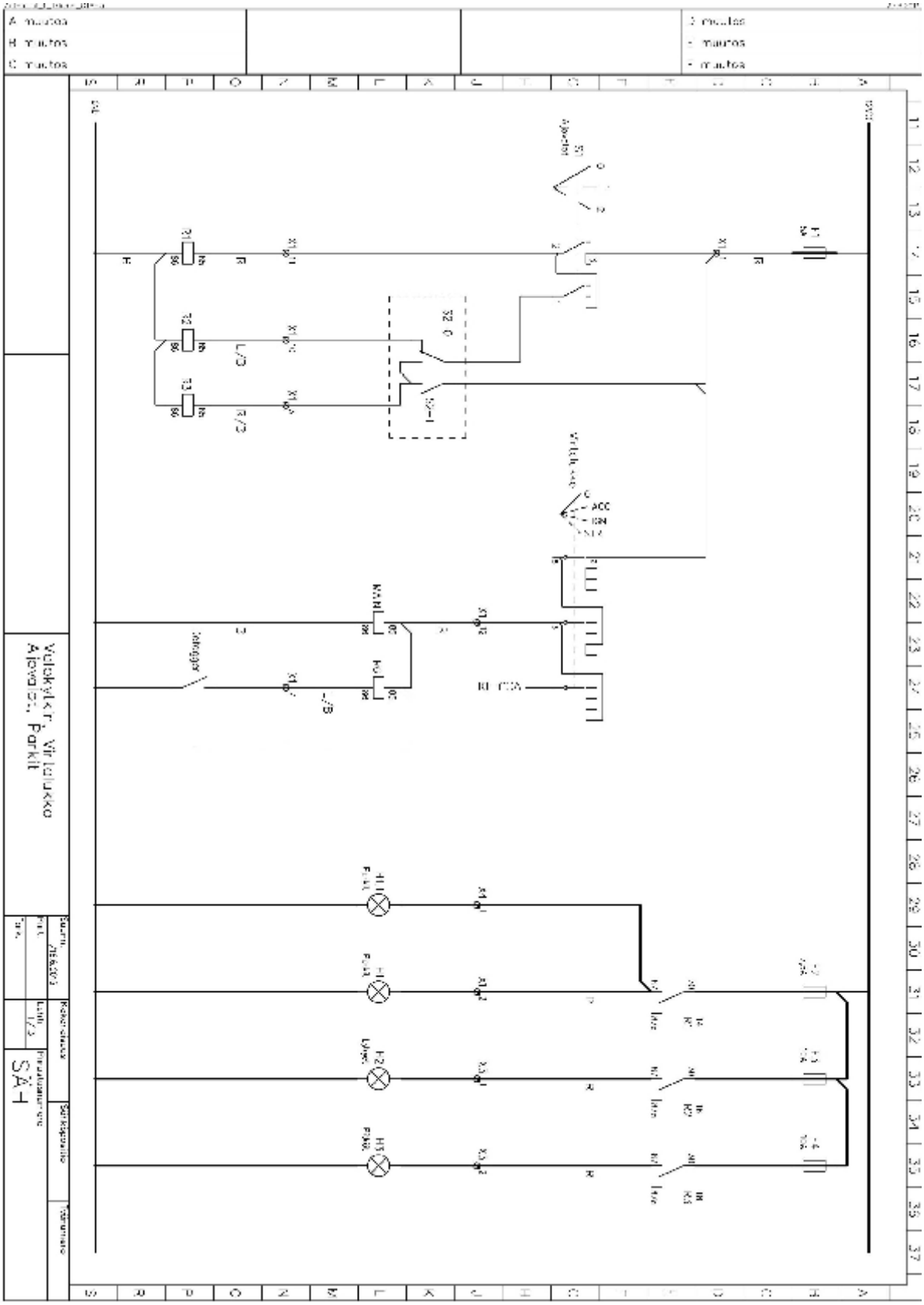

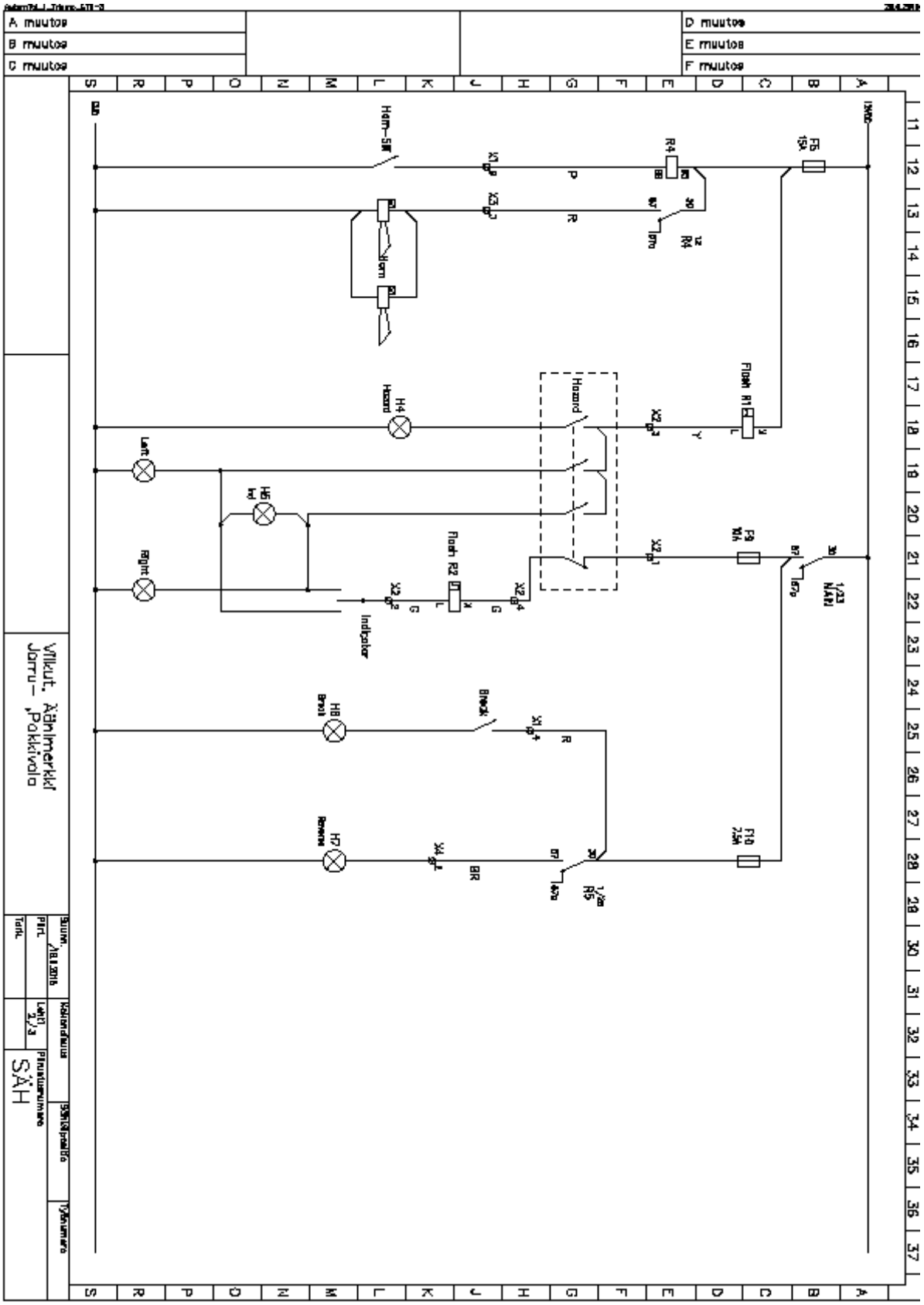
A muutos
B muutos
C muutos
D muutos
E muutos
F muutos
Horn-SW
Horn
R4
F5
15A
Flash R1
H4
Hazard
Left
Right
H5
Flash R2
Indicator
F9
10A
1/23
NAR
H8
Break
H7
Reverse
F10
7.5A
1/28
R5
Vilkut, Äänimerkit
Jarru- ,Pakkivalo
SÄH

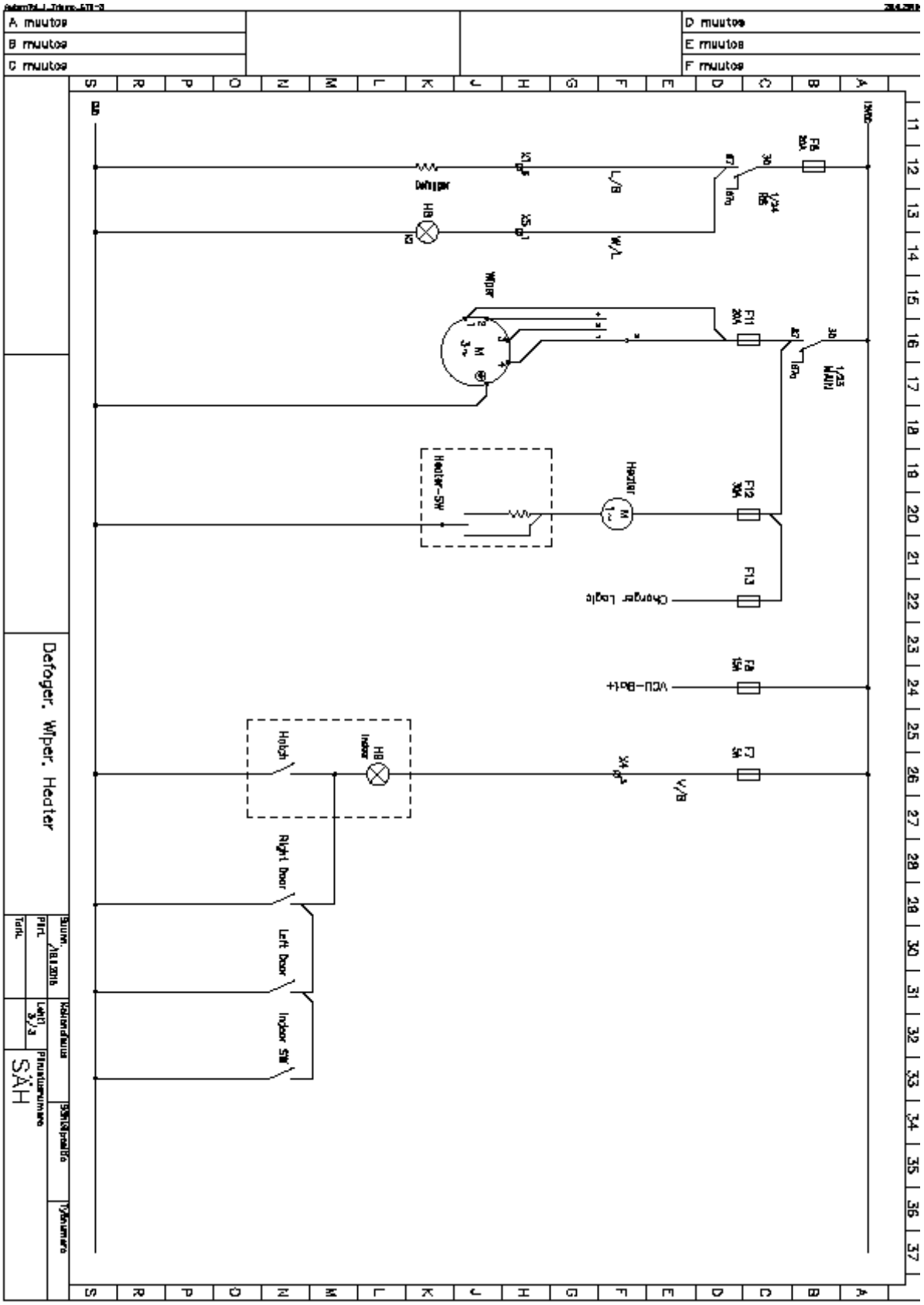
A muutos
B muutos
C muutos
D muutos
E muutos
F muutos
Defoger, Wiper, Heater
SÄH
Wiper
Heater
Heater-SW
Hatch
Right Door
Left Door
Indoor SW
Charger Logic
VCU-Bat+
Defoger