COMMISSIONING A FATIGUE TESTING UNIT

HAMK
HÄMEEN AMMATTIKORKEAKOULU
HÄME UNIVERSITY OF APPLIED SCIENCES

Bachelor’s thesis

Riihimäki
Mechanical Engineering and Production Technology

May 2017
Nikita Dementyev

HAMK
HÄMEEN AMMATTIKORKEAKOULU
HÄME UNIVERSITY OF APPLIED SCIENCES

Mechanical Engineering and Production Technology
Riihimäki

Author Nikita Dementyev **Year** 2017

Subject Commissioning a Fatigue Testing Unit

Supervisor Timo Karppinen

ABSTRACT

Fatigue testing is a crucial aspect in the process of the engineering design. To acquire the information on the fatigue strength and life, testing equipment have been developed. With the help of such devices, the data on the component or material in-service behaviour is gathered.

For the past years, student of HAMK Riihimäki were developing the fatigue testing unit in the laboratory of Automation engineering. The principle of the machine is based on the servo-hydraulic components operated by the programmable logic controller.

The thesis contains the information on commissioning this fatigue testing unit and process of its development. The work has started in February 2017 and has lasted until the end of May. Primary modifications had been done on the gripping mechanisms, servo-hydraulic and direction control hydraulic valves, PLC unit and its programming.

As the result of the thesis, the testing unit was commissioned and was capable of doing high-cycle axial fatigue tests of thin plate parts. The thesis also provides the information on the possible future system modifications in order to collect test data.

Keywords Hydraulics, PLC programming, Fatigue Test, PC WorX

Pages 41 pages including appendices 2 pages

CONTENTS

1 INTRODUCTION 1

2 BACKGROUND INFORMATION 3

2.1 What is fatigue testing? 3
2.1.1 Definition of the fatigue testing 3
2.1.2 Fatigue test objectives 3
2.1.3 Types of fatigue testing 3
2.2 Test performance 5
2.2.1 Test specimens and alignment 5
2.2.2 S-N curves as the objective of fatigue test 6
2.3 Hydraulic layout 8
2.3.1 Main objective 8
2.3.2 Hydraulic cylinders 8
2.3.3 Electro-hydraulic pumps and oil reservoirs 9
2.3.4 Hydro-pneumatic accumulators 10
2.3.5 Direction control valves 11
2.3.6 Servo-hydraulic valves 11
2.3.7 Check valves 12
2.4 Programmable Logic Controller 13
2.4.1 Description of a programmable logic controller 13
2.4.2 Additional units 14
2.4.3 Configuration software 15

3 HAMK RIIHIMÄKI TESTING UNIT 16

3.1 Working principle 16
3.2 Initial operations 17
3.3 Inspection of the servo hydraulic valves 18
3.3.1 Explanation of the problem 18
3.3.2 Testing circuit 18
3.3.3 Inspection of the valves 19
3.3.4 Inspection results 22
3.4 Direction control valve 23
3.5 Developing the gripping mechanism 26
3.5.1 Description of the whole system 26
3.5.2 Upper part of the gripping mechanism 27
3.5.3 Bottom part of the gripping mechanism 28
3.5.4 Load cell instalment 30
3.6 PLC Programming 32
3.6.1 Unit control panel 32
3.6.2 Proximity switch setup 33
3.6.3 Programming the hydraulic cylinder movement 34
3.6.4 Programming of the strain gauge unit 35
3.7 Test performance 38
3.8 Future improvements 40

4 CONCLUSION 41

REFERENCES..... 42

Appendices

Appendix 1 TECHNICAL DRAWING OF THE THREAD REDUCER
Appendix 2 FUNCTION BLOCK DIAGRAMS OF CYLINDER MOTION CONTROL

1 INTRODUCTION

Failure of material, which is subjected to cyclic loading and unloading, is called with a term “fatigue”. It is widely known to be the most common failure with many industrial products, and especially metals (Aeronavlabs 2014). Therefore, it is very important to learn the effects of fatigue and to know how to prevent them in any given case.

Scientists and engineers have studied mechanical failures, caused by fatigue for more than 150 years. Since then, fatigue failure continues to be one of the key aspect in engineering design. Nowadays the annual cost of material fatigue may reach up to three percent of industrial country’s (e.g. USA) gross domestic product. These costs derive from the happening or preventing of fatigue failure for vehicles, aircrafts, bridges, cranes, oil platforms, different machinery and equipment and even household devices we use every day. (Dowling 2013, 417.)

There are lots of engineering applications, where materials or structures are subjected to vibrations or oscillations. In this case, materials behave in a different way, than under static load. Thus, one of the most crucial aspects in the engineering design in terms of fatigue is to be able to determine the lifespan of the material, the amount of time it will sustain under loading conditions.

Today, special machines have been developed in order to arrange fatigue tests. These devices are capable of applying cyclic stress to the test specimen in order to find its endurance. Then the results of the testing can be collected using special software. The cost of such an apparatus is quite high, and may reach hundreds of thousands of euros.

During the past years, students of HAMK Riihimäki had been developing a fatigue-testing unit in the Automation laboratory, made of commonly available industrial items (Fig. 1). The unit consists of a servo-hydraulic system controlled by a programmable logic controller (PLC). All the equipment is attached to a welded metal structure, placed on a layer of concrete. The unit ought to have a user interface, which is capable of collecting test data on a personal computer.

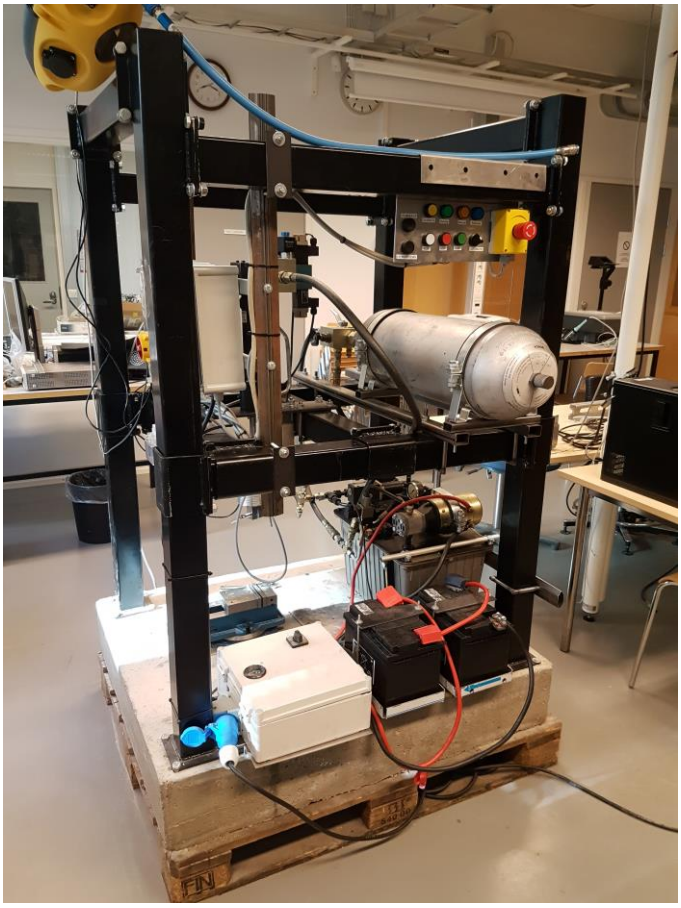

Figure 1. HAMK Riihimäki fatigue testing unit

The aim of this project was to describe the commissioning process of the unit for axial fatigue testing from February 2017, as before that time, the unit was nearly fully assembled, but needed a lot of modifications and additions, because it was not functioning at all. The primary modifications in this projects were done on the hydraulic valves, the PLC unit and the gripping mechanism.

2 BACKGROUND INFORMATION

2.1 What is fatigue testing?

2.1.1 Definition of the fatigue testing

Taking its roots from the Latin word ''Fatigare'', meaning to tire, fatigue in the engineering terminology is the damage or failure of the material under cyclic loading. Fatigue testing can be understood as applying cyclic loading and unloading to a test specimen in order to comprehend the material performance in the in-service conditions as part of an actual design or component (Vaisanen 2013).

Usually, there are two types of loadings, which are put on the test specimen: mass loading, which is calibrated to zero and cyclic loading, as one of the test parameters. Measuring these loadings until complete material failure provides information on the two main properties of fatigue: ''fatigue life'' and ''fatigue strength''. The term "fatigue life" represents the number of cycles a specimen can withstand under repeated loading. Contrary to this the term '' fatigue strength'' means the level of stress the material handles under a certain number of loading cycles.

2.1.2 Fatigue test objectives

According to the international standard (SFS-ISO 1099:en 2006), a few objectives are determined before the procedure of the test:

- fatigue life at a specified stress amplitude
- fatigue strength at specified endurance
- a full Wöhler or S-N curve

2.1.3 Types of fatigue testing

Fatigue tests are divided into two main parts depending on the frequency of the loading: low cycle and high cycle tests. Figure 2 illustrates the typical servo-hydraulic fatigue testing unit.

High cycle fatigue tests are typically executed in a way that the test specimen is cycled between an upper and a lower load level, by controlling the level of the load. The direction of the stress can be matching, e.g. tension-to-tension fatigue tests, or may go through the zero stress point from the tension to compression in a reverse stress loading. Normally, the number of cycles of such tests is above 10^4 to 10^8. To achieve these high frequencies of the test servo hydraulic machines are operated. In this case, there are few crucial aspects in the test. First, specimen must be properly aligned to neglect any probability of bending occurrence. Secondly, due to

the effect of inertia at these high frequencies, precise loading measurement might cause issues. In order to abandon that effect, special designed load cells with the in-built inertia compensators are used.

Figure 2. Servo hydraulic fatigue testing system (Zwick Roell)

In the event of low cycle fatigue, the test frequency is normally lower than in the high cycle, in the range from 10^2 to 10^4 times. Low cycle tests are usually made to simulate the behavior of material in its operating environment. The test setup is quite similar to the high cycle, but the extensometer is attached to specimen, in order to control the strain, due to the higher level of plastic deformation. Moreover, there is a need to keep isothermal conditions, to ensure the close-to-operating temperature. That is why high temperature furnaces and gripping systems are necessary for the test. (Vaisanen 2013.)

2.2 **Test performance**

2.2.1 Test specimens and alignment

Typically, there are two basic specimen types used in the fatigue testing apparatus. The simplest ones are unnotched or smooth, as they have no stress raisers in the failure region.

Different kinds of specimens, containing stress raisers are termed notched. In the in-service components, fatigue failure usually occurs at the notches, such as grooves and holes, because of higher stress concentration in these points. It is almost impossible to eliminate the emergence of notches in the real metal parts, thus the fatigue testing of the notched specimen gives a closer look on the in-service component behavior.

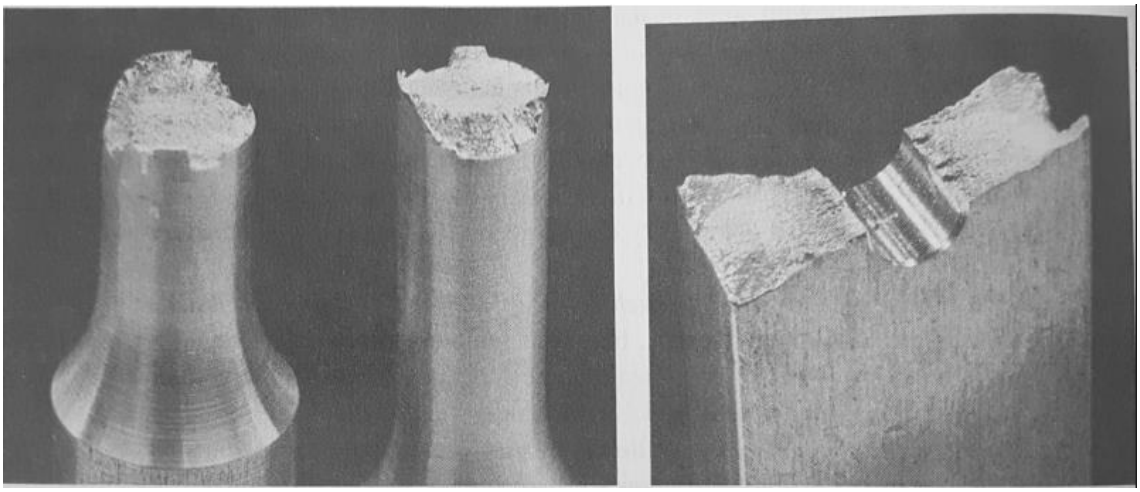

Figure 3. Photograph of broken aluminum fatigue test specimens: unnotched axial specimen (left); and plate with round hole (right). In the unnotched specimen, the cracked began in the flat region with a little lighter color, and cracks in the notched specimen started on each side of the hole (Dowling 2013)

Real structural elements, especially joined with fasteners or welded, are also tested on using fatigue testing. Whole structures or assemblies may also be analyzed in terms of fatigue. A good example of such a test are aircraft wings (Fig. 3) and complete car bodies, which are tested on the special multifunctional apparatus. (Dowling 2013, 435.)

Figure 4. Fatigue test of an aircraft wing (Interfaceforce)

Specimen alignment has very critical effect on the test performance. It prevents bending of the specimen and any unnecessary stresses that can take place during the test. Normally, in order to check the misalignment due to angular and lateral offsets, a special calibration specimen is used. It usually has the same geometry as the tested component. The alignment specimen is loaded in tension and compression to examine the probable bending occurrence. If the bending exceeds 5%, then adjustments to the gripping mechanism should be made. (SFS-ISO 1099:en 2006.)

2.2.2 S-N curves as the objective of fatigue test

When the engineering component is subjected to cyclic loading and unloading conditions, a fatigue crack will appear and keep developing until the component's failure. By increasing the stress level on a specimen, the number of cycles for it to fail will respectively decrease. Reducing the stress level, will increase the number cycles, and for some material, like most steels, will reach the material's endurance limit (fatigue limit), or an infinite number of cycles at some definite stress level. (Dowling 2013, 421-422.)

By gathering the results from the tests of a certain specimen under a variety of stress levels, the data can be represented in a graphical way, stress versus life, also termed as an S-N curves, as illustrated on Figure 5. In this graph the nominal stress level σ is usually plotted against the number of cycles to fail on a logarithmic scale.

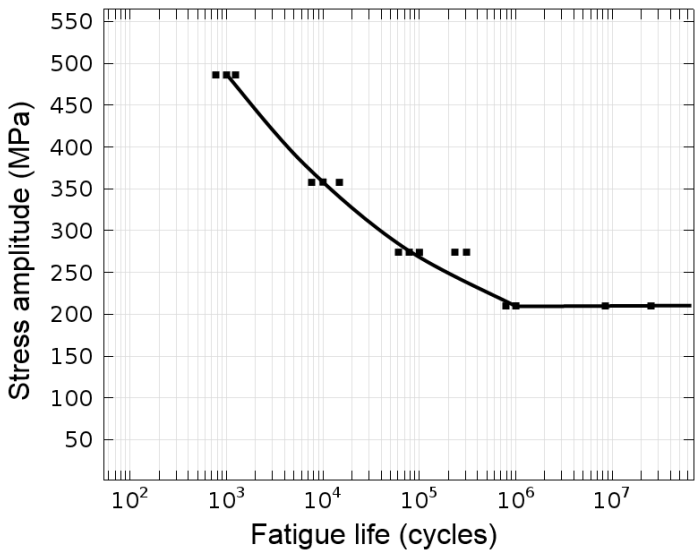

Figure 5. An S-N curve. The black squares represent individual fatigue tests (Comsol, 2014)

S-N curves, are the general way to present fatigue test results, in order to estimate the lifespan of the specimen under cyclic or alternating loading. Nowadays, these curves are usually produced using the fatigue testing equipment, capable of subjecting the test specimen to the cyclic loading/unloading conditions. (Hiatt 2016.)

2.3 Hydraulic layout

2.3.1 Main objective

The core responsibility of the hydraulic components in our project was to carry out the cyclic movement during the test. Because of safety issues, the maximum pressure in the hydraulic system had to be 100 bars. At this pressure, the test frequency can reach up to 10 Hz with small working stroke length.

Most of the hydraulic components came from the project of “Active suspension” and had been already installed by previous students, working on the fatigue test unit.

Various components like servo-hydraulic valves, servo-hydraulic valve control cards, direction control valves, etc. were tested and evaluated for the purpose of the project.

2.3.2 Hydraulic cylinders

Being the most common hydraulic component, a hydraulic cylinder performs its function of turning hydraulic energy into mechanical energy of linear motion. The working principle of a cylinder is as follows: the pressurized hydraulic oil is brought through the inlets to the piston area; then the pressurized oil leads the movement of the piston rod, by applying the force on the piston area. (Götz 1998, 12.)

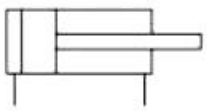

Figure 6. Symbol of a double acting differential cylinder

In our case, the hydraulic cylinder performed its two main functions. Firstly, it implemented the cyclic movement in order to carry out the test. Moreover, the piston rod end was used to fix the upper part of the gripping mechanism. This was possible because of the thread, located at the tip of the stroke.

For this purposes the Hydoring HD 6025 TKP 32/18-250 hydraulic cylinder was used. The main disadvantage of current cylinder is the absence of end cushioning, causing a strong impact on the head and bottom part of the cylinder during the calibration.

Knowing the maximum possible system pressure (p) and the dimensions of the piston, the force of the cylinder stroke could be calculated using the law of Pascal:

$$F = p * A \tag{1}$$

Area (A) for both piston and piston rod can be determined using the expression:

$$A = \frac{\pi}{4} \cdot d^2 \tag{2}$$

Calculating the stroke backward movement force, there is a need to notice, that the area of the pressure is the annular area of the piston:

$$A_R = A_K - A_S \tag{3}$$

Where:
- A_R = annular area
- A_K = piston area
- A_s = piston rod area

The expressions above are to estimate the force of the piston rod knowing the pressure in the system.

2.3.3 Electro-hydraulic pumps and oil reservoirs

Normally, a hydraulic pump takes the working fluid from a tank and moves it to the outlet of the pump, so that it will reach the working modules of the system. Two gears inside the pump do this job; their movement generates a vacuum, drawing the fluid from the tank. (Götz 1998, 34.)

An electro-hydraulic pump, symbol of which is illustrated on Figure 7, is a combination of an electrical motor and a hydraulic pump, assembled together. A motor is used for transferring electrical energy into mechanical, in order to start up the movement of the pump gears.

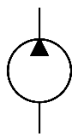

Figure 7. Symbol of a hydraulic pump

A hydraulic system cannot exist without an oil reservoir (Fig.8). Tanks, as they are often named, maintain a variety of functions for the system:

- Storage of the hydraulic liquid

- Heat removal from the hydraulic liquid
- Removal of air bubbles
- Settling the non-filtered oil contaminants
- Separation of condensed wet
- Pump and motor mounting

Figure 8. Symbol of a hydraulic reservoir

In our project, certain components were used:

- Hydoring HDK 100-55-8-3-24/24 electro-hydraulic pump 24 v, 2 Kw
- Hydoring HDK K100 -25- hydraulic reservoir of 25 litres

2.3.4 Hydro-pneumatic accumulators

Hydro-pneumatic accumulators (Fig. 9) store the hydraulic energy delivered by the pump and then release it to in case of need (Götz 1998, 126). Accumulator is a reservoir containing pressurized gas that can take some amount of hydraulic oil to provide it to the system when the pressure drops too low. During the intervals of idleness, capacity of the electro-hydraulic pump will be sufficient to recharge the accumulator.

Figure 9. Symbol of a hydraulic accumulator

In accordance with the international safety regulations, suitable pressure gauge (Fig. 10) is always used when installing the accumulator.

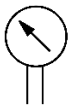

Figure 10. Symbol of a pressure gauge

Accumulator charging valve is also installed in the layout, as it charging the accumulator by in taking the pressure from the pump in the intervals, when the accumulator is inactive.

Project components responsible for these functions are as follows:

- Bosch FD 965 015 Hydro-pneumatic accumulators with the nominal volume of 20 litres, accumulator shell is RT 142-20 manufactured by Roth
- Bosch 0 532 015 135 pressure gauge
- Bosch 0 811 106 034 accumulator charging valve

2.3.5 Direction control valves

In order to arrange links between different components of the hydraulic layout by means of closing, opening or changing the direction of the flow, direction control valves are used (Götz 1998, 70). In the current project, we used basic a Bosch Rexroth 4/3 direction control valve, which was available at the HAMK Riihimäki hydraulic laboratory.

The position of the control valves can be changed using external control mechanisms. The most common types of such controls are mechanical or electrical. Valve mentioned in the previous paragraph had been already assembled with solenoid and spring centering control mechanisms.

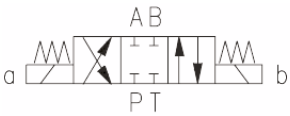

Figure 11. 4/3 direction control valve with spring centering and solenoid (Bosch Rexroth)

As direction control valves cannot control the speed of the flow, they are often installed along with the flow control valves. However, in our case there was no possibility of installing these.

2.3.6 Servo-hydraulic valves

A servo-hydraulic valve is an electrically operated valve, which controls the direction and the speed of the flow, by means of converting incoming analogue or digital signal to smooth cylinder movement. Usually, by controlling the voltage (±10 V) applied on the valves electronics, a valve can precisely adjust the position of the inlets to control position, velocity and pressure. (MOOG Inc. n.d.).

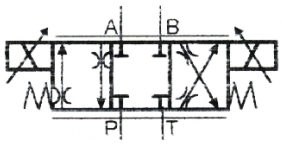

Figure 12. 4/3 Servo-Hydraulic valve (Bosch Rexroth)

HAMK Riihimäki possessed two servo-hydraulic proportional valves 4WRPEH 6 C4B40L –2X/G24K0 / A1M by Bosch Rexroth. An inspection of these two valves is described in the chapter 3.

2.3.7 Check valves

Check valves are typically used in order to block the flow in one direction, however allow the flow in the opposite one. To ensure the total leakage absence those valves are always poppet-type. In our case, the electrically controlled Bosch Rexroth check valve was allowing the flow in all direction only when the valve's solenoid was supplied with 24 V.

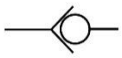

Figure 13. Symbol of a check valve

2.4 Programmable Logic Controller

2.4.1 Description of a programmable logic controller

A programmable logic controller (PLC) is one of the most common devices used nowadays in industrial automation. The designation of a PLC is to handle logic functions, depending on the state of input and output circuits.

Programmable logic control was developed in the late 1960s, as a replacement for the relay logic systems. Those day relay systems were causing a lot of trouble, since the failure of one relay induced the diagnostic of the whole relay walls. (Gonzalez 2015.)

On the Figure 14, the working principle of a PLC is described. Encoding the input values, PLC's central processing unit uses the programmed commands, given by the operator through an external computer during the configuration, to operate the output values in the units, connected to the system.

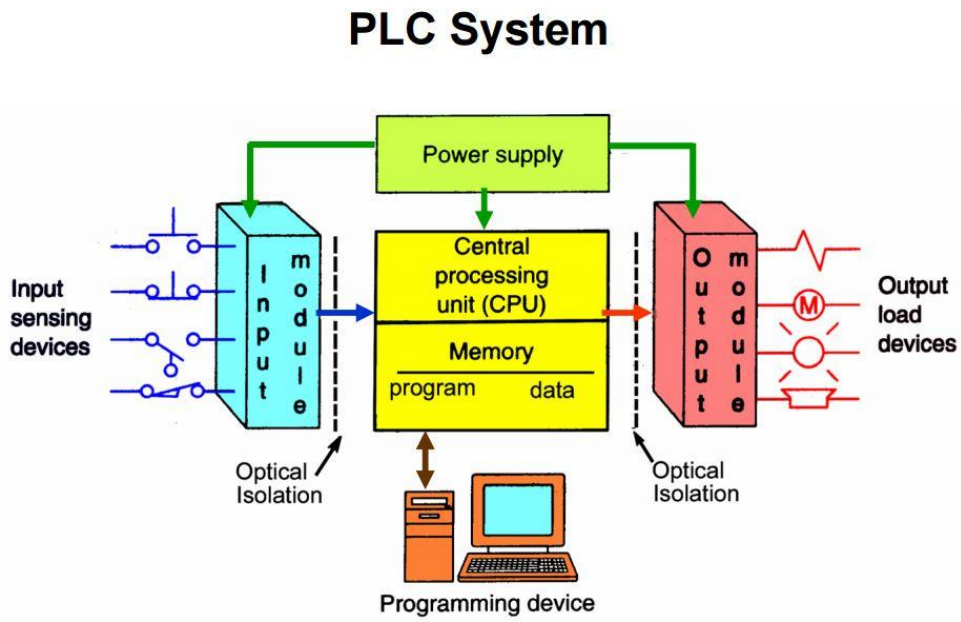

Figure 14. Principles of PLC operation (Machine Design)

One of the main advantages of the PLC is that it does not require a constant connection to the programming device, as the program may be saved on the PLC memory and then processed, even if the computer is disconnected. PLC can sustain well harsh weather conditions, which makes it a very good choice for industrial automation.

Normally, when there is a need for more than 16 inputs and 10 outputs, a modular PLC is used. A modular PLC allows various system expansions by adding input and output units, when required. (Karppinen 2014.)

In the current project, we used Phoenix Contact ILC 131 ETH. This PLC has 8 digital inputs and 4 digital outputs, an Ethernet port and it can be configured with Phoenix Contact PC WorX software.

2.4.2 Additional units

In most programmable control units, there is an option of adding more input and output units to extend the number of input and output circuits in the system by installing a distributed I/O (Input/output).

This IO can be situated close to the PLC or at a distance using a field bus for the connection. Covering a wide area, e.g. traffic lights control, or the water level in the rivers, is possible using the PLC and the distributed I/O.

In order to maintain all the project operations for the fatigue testing we used additional I/O in combinations with the PLC listed above.

In the Figure 15, the PLC with the I/O units, used in the project, is shown.

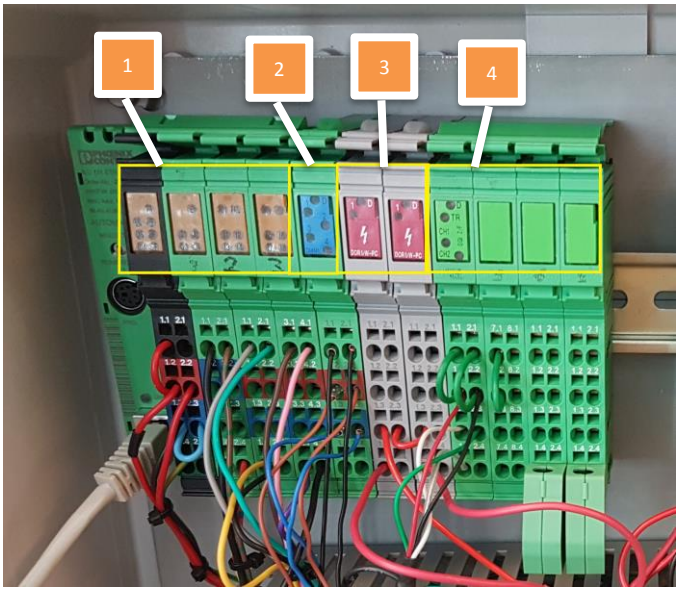

Figure 15. PLC with additional units

In the Figure 15 item ‘’1’’ comes from ILC 131 ETH. It is connected to the power supply and provides power for most of the installed units. Input and output units are connected to the fatigue testing machine operational panel. Next to the PLC there is label ‘’2’’ in the Figure 15, which is the Phoenix Contact Inline terminal - IB IL 24 DI 4-ME. It provides four inputs,

which are used for controlling the sensors. Labeled with ''3'' in the figure there are two identical IB IL 24/230 DOR1/W-PC-PAC relay terminals. With the help of these, the hydraulic valve control is operated. Last in the figure, label ''4'', is the IB IL SGI 2/F-PAC strain gauge unit. It is capable of maintaining all the necessary functions for the load cell used in the project.

2.4.3 Configuration software

Before the PLC can start maintaining its functions, it must be properly configured. For most of the Phoenix Contact controllers, PC WorX software is used. This software combines programming, field bus configuration and diagnostics.

The programming system works on the 32-bit Windows technology and has a simple user interface, e.g. zooming, drag & drop, and dockable windows. Configuration of elements and libraries for any given unit, easily accessible from the Phoenix Contact website, can be integrated into PC WorX. Moreover, the programming system includes a decent debugging tool. All the functions can be found in the program menu and creating a new project requires only a few dialog windows. (Phoenix Contact GmbH & Co. KG 2011, 1-1.)

Most of the questions related to the configuration software can be found answered in the PC WorX Quickstart guide, which is usually installed along with the software itself, or can be downloaded from the Phoenix Contact web pages.

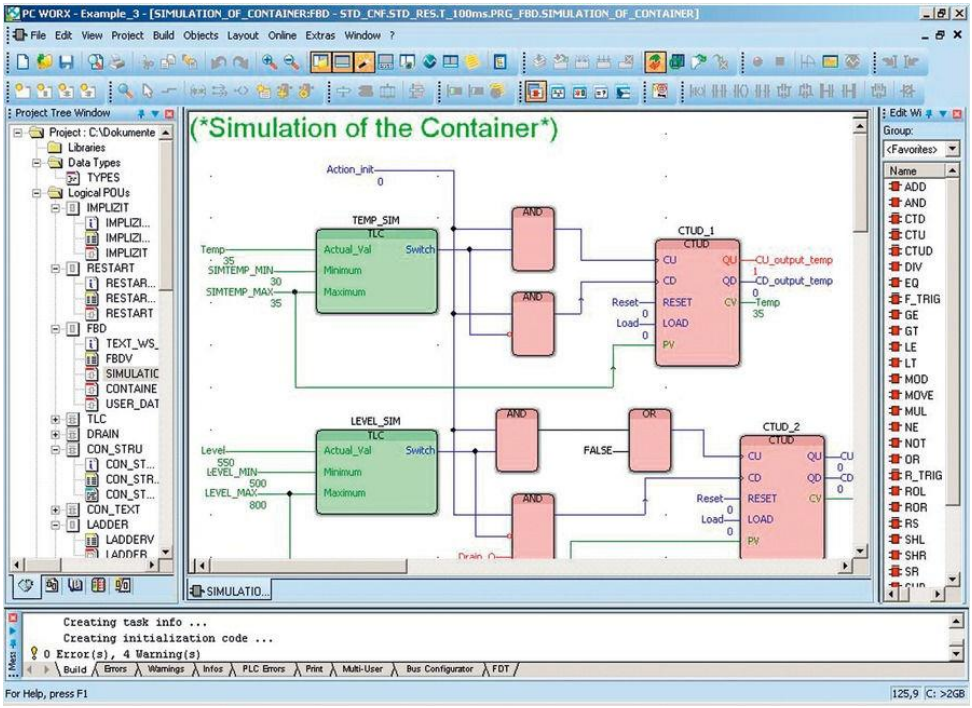

Figure 16. Typical PC WorX user interface (Phoenix Contact)

3 HAMK RIIHIMÄKI TESTING UNIT

The following chapter will describe the manipulations done on the HAMK Riihimäki axial fatigue-testing unit. The work started on in February 2017 under the supervision of Mr. Timo Karppinen.

3.1 Working principle

In order to obtain information on the unit modifications, the working principle must be explained first. Figure 17 illustrates the testing unit, with the main components marked, in the beginning of the project.

The main operating principle begins with two 12 V batteries (1), which are used to start the electro-hydraulic pump (2). The pump then drives the hydraulic oil from the reservoir (3) to the operating components: hydro-pneumatic accumulator (4) and hydraulic valve (5). Hydraulic valve, controlled by the PLC, distributes pressurized oil to the hydraulic cylinder (7), which is performing the cyclic movement. The test piece then should be fixed to the base of the machine from one end and to the piston rod of the cylinder to the other end. The load cell must be also inserted in the gripping system in order to measure the force of the movement. The operator using the control panel (6) controls the whole test process.

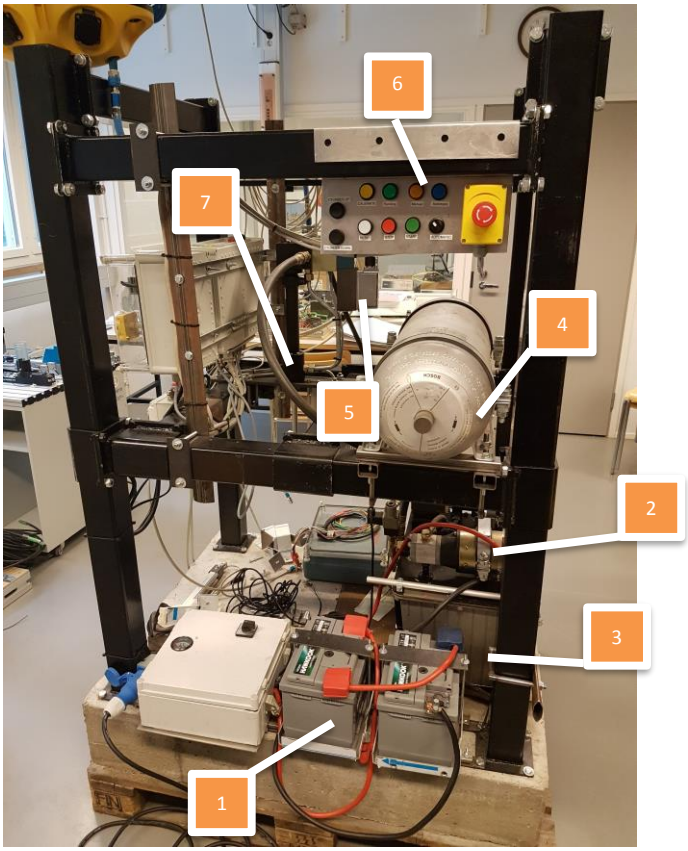

Figure 17. Fatigue testing unit in February 2017

3.2 Initial operations

Firstly, the batteries were replaced with new ones. Then, by developing simple program using the PC WorX, we tried to start up the system, to see, if the hydraulic cylinder was moving. At that time the servo-hydraulic valve was installed into the system.

This attempt was not successful, as we could not make the cylinder to move. Measuring system voltage on the power supply and the PLC, we decided to replace the current power to supply (5 A, 24 V) to the more powerful one (10 A, 24 V).

Installing the new power supply made no difference, the hydraulic cylinder did not move at all. As we had two identical servo-hydraulic valves, one valve was replaced with another. This procedure also made no difference; therefore, we determined that the problem must be in the servo-hydraulic valves. The following chapter explains the process of problem analysis of these valves.

3.3 Inspection of the servo hydraulic valves

3.3.1 Explanation of the problem

During the work on commissioning the fatigue testing unit at the HAMK Riihimäki Automation Laboratory, we encountered a problem with two servo-hydraulic proportional valves 4WRPEH 6 C4B40L –2X/G24K0 / A1M material no. 0 811 404 613. These valves were bought in September 1999, and they have been at HAMK since then. When testing the machine, these valves did not provide any motion to the hydraulic cylinder.

The purpose of the valves is to control the movement of the Hydoring HD 6025 32/18 cylinder in order to run the fatigue test of specimens. The hydraulic system was operated at 100 bars. With both 4WRPEH 6 proportional valves, there was no rod displacement. From the test of the same system layout with the directional valve, we established, that there was a failure in both of the Bosch Rexroth 4WRPEH 6 C4B40L –2X/G24K0 / A1M Valves

3.3.2 Testing circuit

The following circuit from the valve's manual was used in our test.

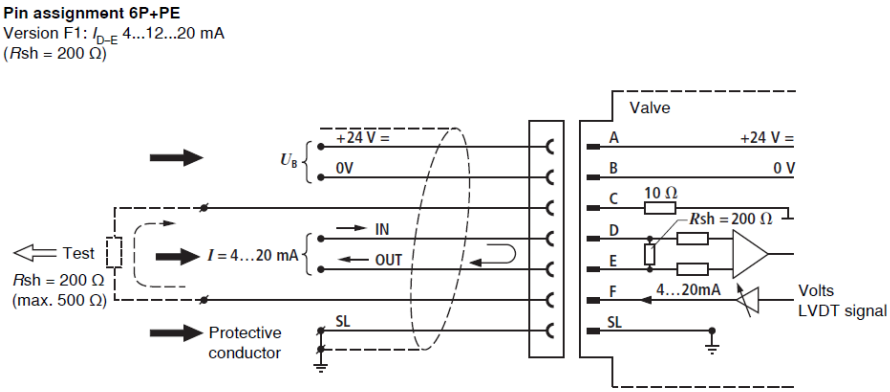

Figure 18. 4WRPEH 6 C4B40L valve testing circuit (Bosch Rexroth)

Two power supplies were used for supplying voltage (24 V) and controlling voltage (±10 V) on the valve. The picture of the real system is shown on Figure 19. The valve was disassembled to be able to disconnect the coil solenoid from the on-board electronics (Fig. 20).

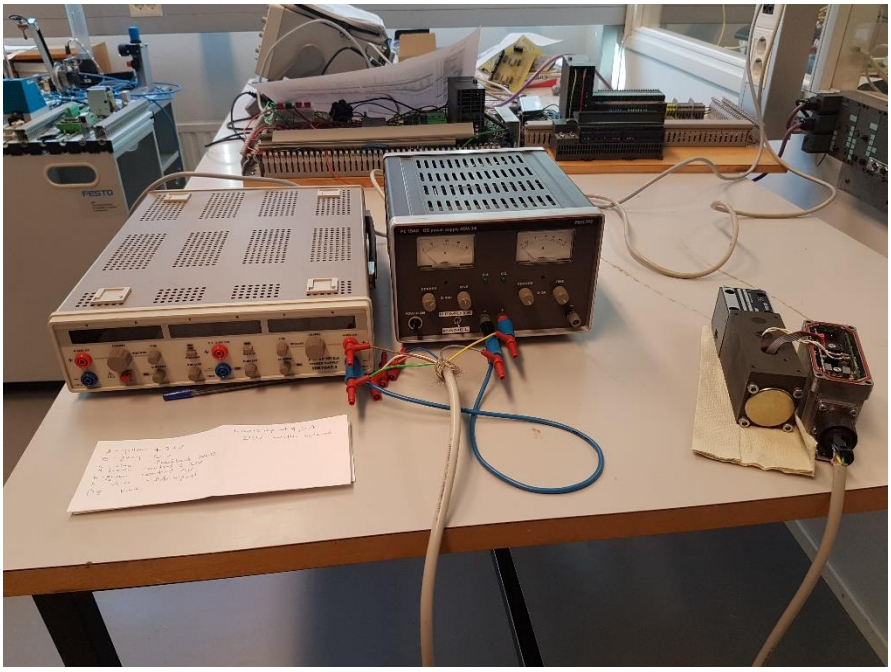

Figure 19. Valve testing system

3.3.3 Inspection of the valves

The following figure shows current 4WRPEH 6 C4B40L –2X/G24K0 / A1M valve. On-board electronics (OBE) is marked with label 1. Control solenoid is marked with label 2, and valve body is marked with label 3.

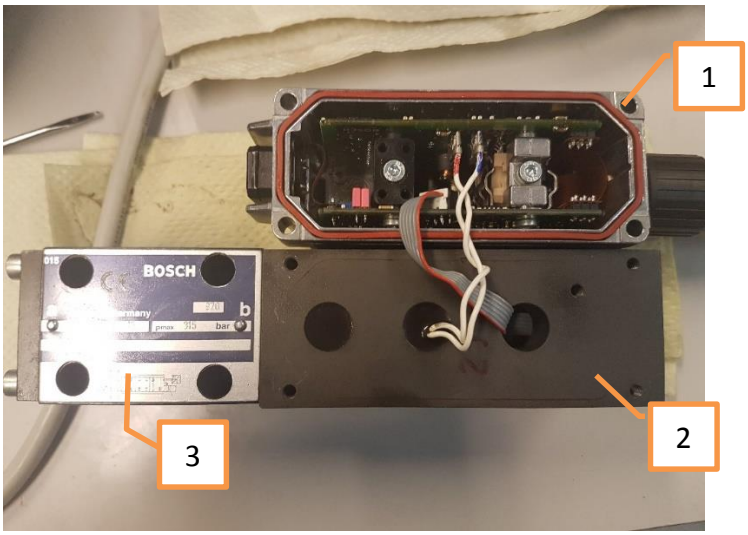

Figure 20. 4WRPEH 6 C4B40L –2X/G24K0 / A1M valve disassembled

During the inspection of the first valve, coil resistance was measured to be 3 Ohm. Then the valve was connected to the testing system. By gradually

increasing the voltage on the power supply, the valve started to take more than 3 A, at the very low voltage of about 5 V. Disconnecting the on-board electronics from the rest of the valve parts, and testing to supply voltage only on the on board electronics, it, still, was taking more than 3 A, at the same low voltage. Therefore, it was decided not to do any operations with current valve, as the problem must be in the OBE of this valve.

Therefore, the second servo hydraulic valve was taken up for an inspection. This valve had the same coil resistance, as the previous one (3 Ohm). Then the valve was connected to the testing system. By gradually increasing the power supply voltage, the amount of 1.6 A current appeared first at 20 V voltage, and then it decreased to stable 1.3 A at the operating 24 V.

Then the whole valve was operated by controlling the voltage (±10 V). In this procedure the control, voltage, displayed on the power supply, should be the same as the feedback voltage, measured with the multimeter. However, no matter what control voltage supplied on the valve, the feedback voltage always stayed at 12.7 V. Taking this fact into account, we proposed that the rod in the valve body (Fig. 20) is stuck, and the feedback voltage always displayed its position. Therefore, we disassembled the valve body from the OBE and the control solenoid to see, if the control solenoid changed the displacement of its controlling rod (Fig. 21), when the control voltage was adjusted.

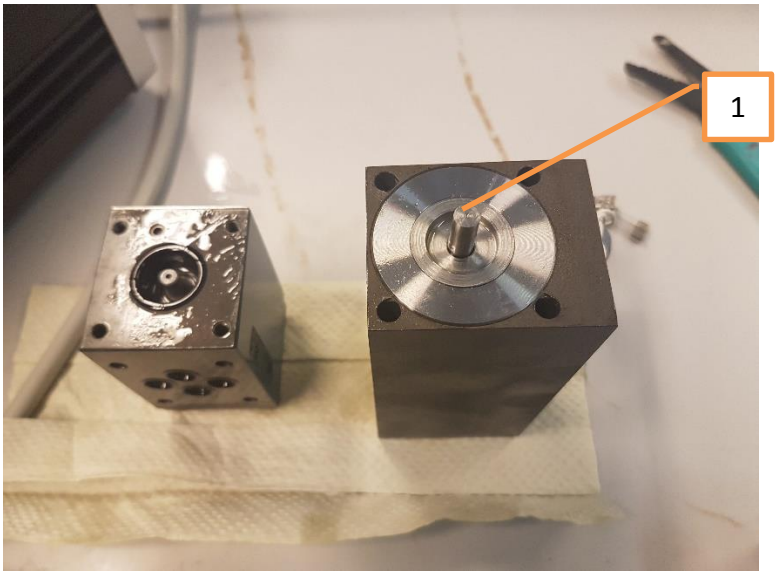

Figure 21. Valve body and control solenoid disassembled from each other. The solenoid rod is on the body (1)

At a voltage of 20 V, the solenoid started to hold its rod, so it could not be easily manually moved. When manually moving the solenoid control rod, displacement could be seen in the feedback. If holding the rod in the zero position (seen in the feedback), and then adjusting the control voltage, the rod actually moved and the control voltage was respectively the same as

the feedback voltage on the multimeter display. In the Fig. 22 and Fig. 23 this operation is shown.

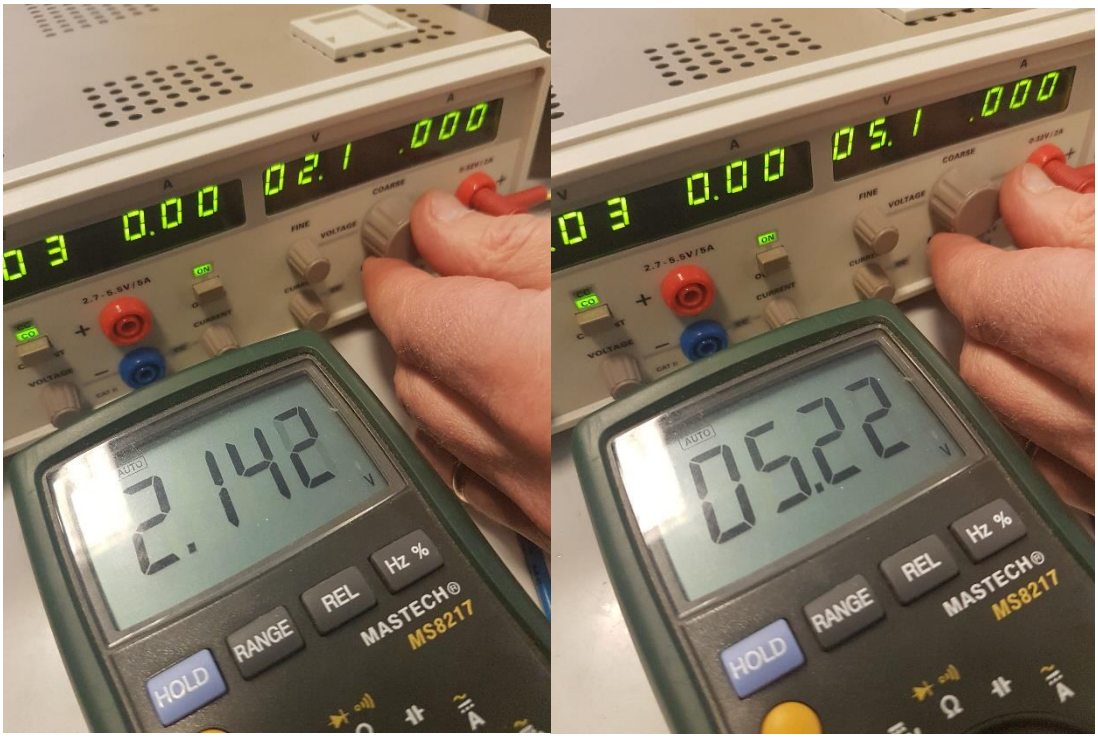

Figure 22. Respective voltage when manually controlling the solenoid's rod

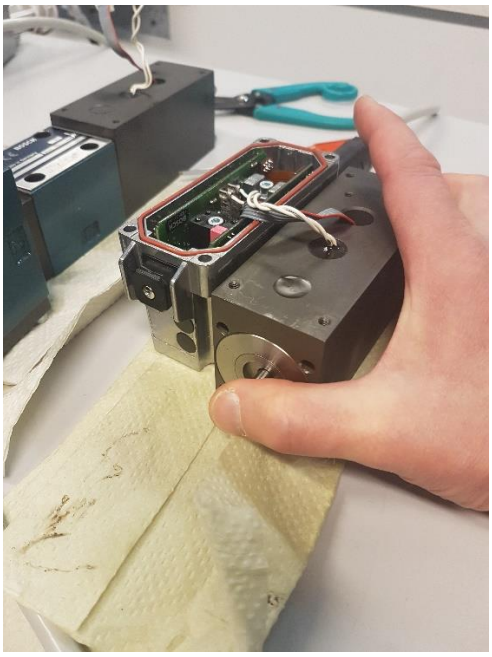

Figure 23. Process of the manual rod test

3.3.4 Inspection results

This operation showed, that the control solenoid and OBE worked, as they should. By doing the test circuit assignment, assembled valves showed no performance, in terms of switching valve position, and no corresponding output signal to the developed test system.

By the processes, described in this chapter, we established that the problem of the first valve had to be connected with its on-board electronics, and the second one had to have an issue with the valve body. For further maintenance, valves must be delivered to Bosch Rexroth.

3.4 Direction control valve

With the intention to replace the non-functioning servo-hydraulic valve, we obtained the simple 4/3 direction control valve. As this valve had absolutely the same ports, there were no difficulties in the replacement process.

A separate wiring connection with two push buttons was designed, so that it would be connected to direction control valve, to adjust the up and down cylinder movement. By pushing one of the buttons, the electrical circuit was closed, to activate one of the valve's solenoids. This experiment showed that the system was capable of handling the cyclic cylinder movement, as the valve was controlling the flow direction.

After the procedure of testing the valve with the separate circuit, direction control valve was connected to the PLC, and using the program, illustrated on Figure 24, the same cylinder movement was performed, but now controlled with the program.

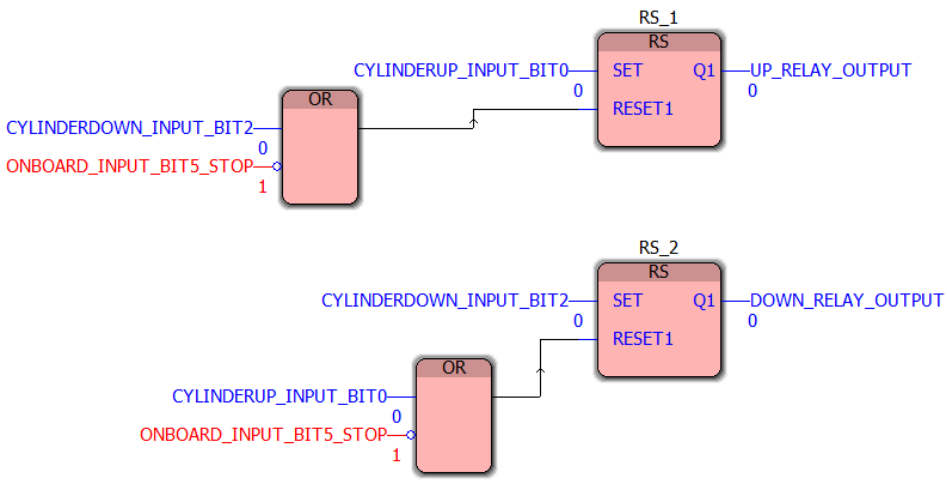

Figure 24. Initial control of the direction control valve. Two circuits are made to set the Up/Down cylinder movement. Stop button on the control panel is used for interrupting the movement

The PLC was well operating the cylinder movement, so we decided to persist with the direction control valve in the project.

One of the main disadvantages of this decision was that the direction control valve was unable to control the velocity of cylinder movement. Usually, when there is a need of the speed adjustment with the direction control valve, the flow control valve is introduced to the system. The flow control valve is able of limiting the flow, determining the speed of the movement. However, there was no physical possibility of installing the flow control valve to our system, due to its connection type and lack of free space of the unit. Therefore, we decided to limit the flow from the oil

reservoir manually, as the tank had the regulator and the pressure meter in its system. Since then, we were unable to control the speed of the cylinder movement. However, we could limit the system pressure and then could calculate the force of the cylinder movement at any given pressure.

On the Figure 25, final hydraulic layout, containing direction control valve, can be seen.

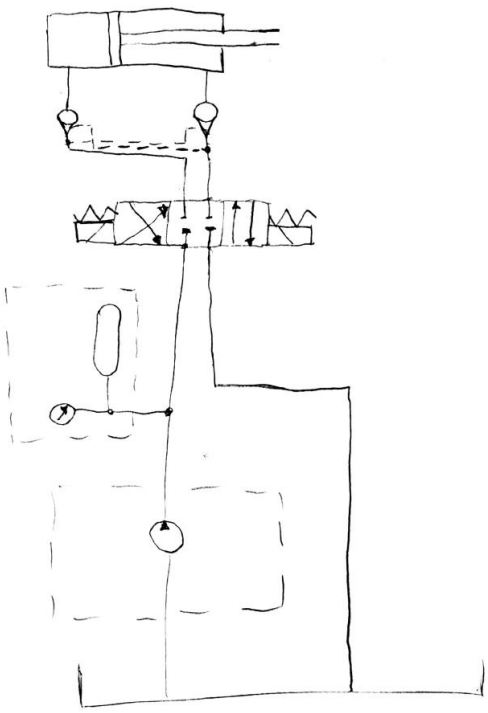

Figure 25. Final hydraulic layout of the system

In order to obtain the force of the cylinder movement, we had to use formulas, mentioned in the chapter 2.3.2. The maximum operational pressure is 100 bar. Cylinder dimensions were 32 mm for the piston diameter and 18 mm for the rod diameter. Therefore:

$$A_S = \frac{\pi}{4} \cdot d^2 = \frac{\pi}{4} \cdot 18^2 = 254.47\, mm^2$$

, was the area of piston rod.

$$A_K = \frac{\pi}{4} \cdot d^2 = \frac{\pi}{4} \cdot 32^2 = 804.25\, mm^2$$

, was the area of the piston or the outside movement area.

$$A_R = A_K - A_S = 804.25 - 254.47 = 556.78\, mm^2$$

, was the annular area, or the area of the inside rod movement.

Knowing the areas and the nominal pressure we able to determine the maximum force in both direction:

$$F_K = 804.25\ mm^2 \cdot 100\ bar \approx 8\ kN$$

, for the outside movement, and

$$F_R = 556.78\ mm^2 \cdot 100\ bar \approx 5.6\ kN$$

, for the rod inside movement.

Collecting all the obtained data, we got that the force range is 0-8 kN for the rod outside movement, and 0-5.6 kN for the inside movement.

3.5 Developing the gripping mechanism

With the intention of subjecting loading to run the test, specimen had to be tightly fixed to the piston rod from one side, and to the concrete bottom from another side. To accomplish this task, suitable parts were bought, after browsing the market for a few days. The following chapters describe the process of choosing, installment and performance of the gripping system used in this project.

3.5.1 Description of the whole system

Firstly, after selecting the necessary parts to be ordered, a sketch of the whole gripping system was made, according to the installment possibilities of the testing unit. Figure 26 illustrates the sketch, which contains all the proposed parts. Jaw clamp (3) is used for joining the piston rod and the specimen. Small milling table (1) was intended to be attached to the concrete base. The table contains extruded t-slots, which allow mounting of the next gripping system stage. Large milling vice (2), fastened to the milling table, is used for gripping the lower part of the specimen. Overall, the system was designed to be stiff and adjustable, in order to conduct fatigue tests.

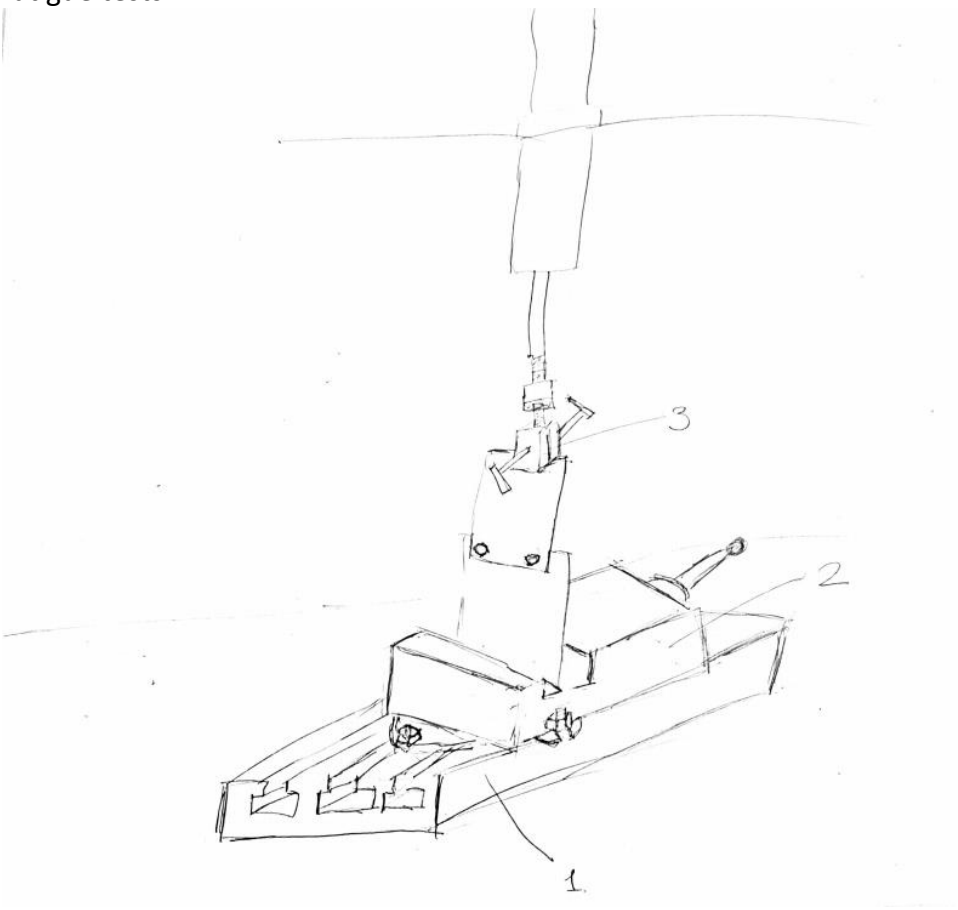

Figure 26. Sketch of the gripping mechanism

3.5.2 Upper part of the gripping mechanism

A specimen's upper part was intended to be attached to the piston rod end, which would be the source of the cyclic loading for the specimen. As the Hydoring HD 6025 TKP 32/18-250 cylinder's piston rod contained the M14 male thread on its end, we decided that the upper gripper must also contain a thread for easy and adjustable connection of parts.

As the result of browsing the internet markets and thinking of possible connection ideas, we decided that the part must be axial tensile test gripper. The prices of those grippers may reach up to a thousand euro. However, we found a relatively inexpensive and simple jaw type gripper on amazon.de.

The choice was the AC 12 jaw clamp by Sauter, illustrated on Figure 27. This simple gripper is usually used in the connection with strain gauges, which made joining the whole gripper system way easier. The jaw clamp is capable holding tension and compression of 5 kN and has moderately compact sizes. The connection to the strain gauge was possible because of male M10 thread situated on top of the gripper. The Zemic load cell that we used in the project, contained compatible M12 female thread, which made a stable connection joint of these two parts, by joining these using the simple nut.

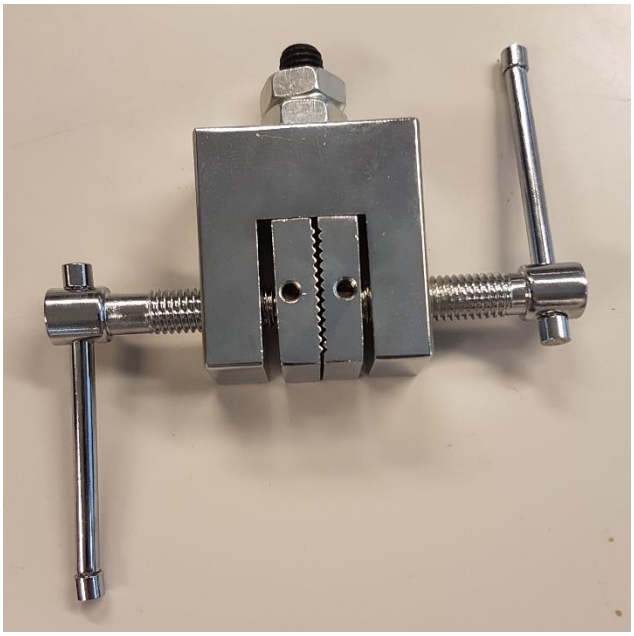

Figure 27. Sauter AC 12 jaw clamp

One of the problems that we encountered during the installment of the upper gripper, was that piston rod contained M14 male thread, and the connection joint of the jaw clamp and strain gauge had the female M12 thread. In order to solve this connection problem a female M14 to male M12 thread reducer was designed and manufactured at the mechanical

engineering laboratory of HAMK Riihimäki. The technical drawing of the thread reducer was attached to the thesis appendix.
Overall, upper part of the gripping mechanism consisted of: female M14 to male M12 thread reducer, strain gauge and jaw clamp, which was fixing the specimen itself.

3.5.3 Bottom part of the gripping mechanism

The whole gripping mechanism was designed so, that the lower part of the specimen would be always completely fixed, as the load will be only applied to the upper part. That means, that the lower gripper mechanism had to be fixed to the concrete bottom and had to be heavy enough to minimize the vibration effect during the test.

Considering these points, we decided that the specimen should be fixed with the mechanical vice of a great size. After looking for an affordable and suitable choice, 100 mm milling vice with swivel base (Fig. 28) was bought from arceurotrade.co.uk.

Figure 28. ARC Versatile Milling Vice (arceurotrade.co.uk)

One of the advantages of this vice was that the swivel base allows rotation of the vice and slight horizontal adjustment of the vice positioning, which was very crucial point in the specimen alignment.

In order to setup the milling vice to the system, it had to be fixed to the concrete bottom. Because of this, small t-slot milling table was ordered from the same merchandiser. The table has three 12mm wide T-slots, allowing arrangement of the milling vice or the milling vice swivel base.

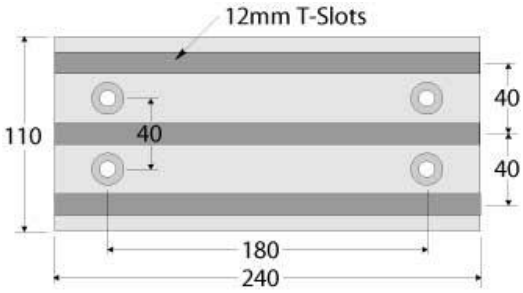

Figure 29. Milling Table (arceurotrade.co.uk)

The table was fixed down using four counter bored holes. In order to install the table to the concrete bottom, four brass anchor were used in combination with M8 bolts (Fig. 30).

Figure 30. Brass anchors used for installing the milling table (talotarvike.com)

The combination of anchors and bolt allowed secure installment of the whole system and stable specimen clenching.

Figure 31 illustrates the final version of the bottom gripping mechanism, containing mechanical milling vice with the swivel base, installed on the milling table. Fixing the specimen using the milling vice did not allow any movement of the specimen. Relatively big weight of the whole system reduced the effect of vibration during the test.

Figure 31. Overall look on the bottom gripping mechanism

3.5.4 Load cell instalment

To establish the force applied on the specimen a load cell (strain gauge) for a tension/compression load must be used. In our project we used Type H3 Load Cell by Zemic. It is a nickel plated alloy steel IP67 “S” type load cell used in tension and compression applications. The model we operated is H3-C3/C4-200kg-3B and it was capable of measuring force up to 200 kg.

Figure 32. Zemic Type H3 Load Cell (Zemic Europe B.V)

In order to operate the load cell, first of all, its wiring to the strain gauge PLC unit had to be done. Wiring, illustrated on the Figure 33, is a typical 4-wire strain gauge connection. Input and output wires were connected to the corresponding inputs/outputs on the strain gauge unit.

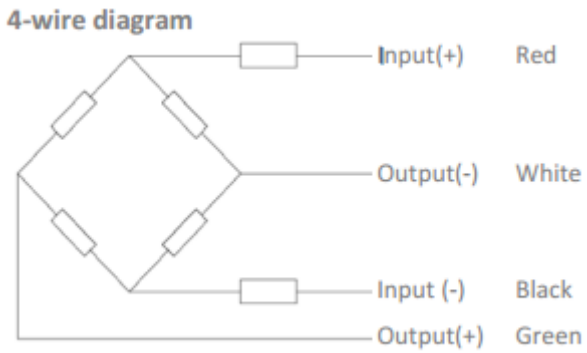

Figure 33. Strain gauge wiring

To obtain the force applied to the strain gauge, special function block for Phoenix Contact PC WorX (described in chapter 3.6) was used. In order to calibrate the strain gauge and get the actual results of the force on it, we conducted a tension test. By applying weight of 15 kg to the strain gauge, the function block displayed exactly 15 kg of corresponding load.

Right after the calibration the strain gauge was ready to be installed next to the gripping mechanism. One of the load cell’s function in the project,

mentioned in the chapter 3.5.2, was the hub for the gripper and piston rod end. Two M12 threads on both strain gauge's end allowed flexible installment of the gripping mechanism.

3.6 PLC Programming

PLC programming was one of the most important part of the project. PLC unit organized almost every action of the hydraulic system, shut down the test in case of some failure, allowed step-by-step monitoring of hydraulic cylinder motion and managed all the strain gauge operations.

The whole process of PLC programming was made using Phoenix Contact PC WorX software, which was described in chapter 2.4.3. Phoenix Contact PC WorX mostly demands basic programming skills from its user, as the process of PLC configuration is made using the function blocks by the principle of drag and drop. These blocks are ready made functions, which are connected to the input/output system units.

The process of PLC programming used in the project could be roughly separated into two main subjects. The first one was the control of the hydraulic cylinder motion during the processes of calibration and fatigue testing. The second subject was the strain gauge unit programming. All of the strain gauge operations were related to this subject.

The following chapters will consider most of the issue connected to the programming the PLC unit and using it in order to perform axial fatigue test.

3.6.1 Unit control panel

With the intention to manually control hydraulic cylinder, switch testing modes and stop the system in case of emergency, the unit control panel, illustrated on the Figure 34, was introduced

Figure 34. Unit control panel

The panel consisted of push buttons, a switch, three light indicators and a typical emergency stop switch. All of the below were connected to the PLC units and were assigned to the program using the PC WorX software.

The functions of the panel components:

- “Cylinder Up” and “Cylinder Down” buttons were to manually control the cylinder movement
- “Calibrate” button set the strain gauge output value to zero, in order to calibrate it
- “Reset” reset the value of minimum/maximum force obtained by the strain gauge unit
- “Start” and “Stop” were for starting and stopping the test performance
- “Running” indicator lighted up, when starting the test
- “Automatic” switch worked with “Manual” and “Automatic” indicators and was used for determining the operating mode of the test unit
- Emergency stop button was used for stopping the whole test process, as it shut down the hydraulic check valve

3.6.2 Proximity switch setup

To limit the movement of the hydraulic cylinder, sensors or limit switches had to be installed to the system. Student, who previously had worked on the project, tried to use the mechanical switch to control the movement. However, we decided to use two proximity switches instead. These are sensors, which react on a close contact to a metal.

For our project, we used two Omron E2A-M18KN16-WP-B1 2M proximity switches. It has sensing distance of 12.8 mm and reacts on ferrous metals. In order to, fix the sensors close to the hydraulic cylinder, thin metal plate with mounting holes, was installed.

To activate the sensor, it had to detect metal within its sensing distance. With that purpose, an approximately 100mm metal cup of ferrous metal was installed to the gripping mechanism this way, so that the strain gauge would be covered inside the cup. A cup made of sheet metal, was installed in between the thread reducer and the load cell and tightly pressed in there. The whole system of movement limiting is illustrated on the Figure 35.

The logic behind this system, was that the cylinder was moving in either upward or downward direction. Program logic controller was operated so, that, when one of the proximity switches was out of range the cylinder stroke was forced to move in the opposite direction. That means, that the

proximity switches limited the cylinder movement and made up/down movement loop, which created the cyclic motion.

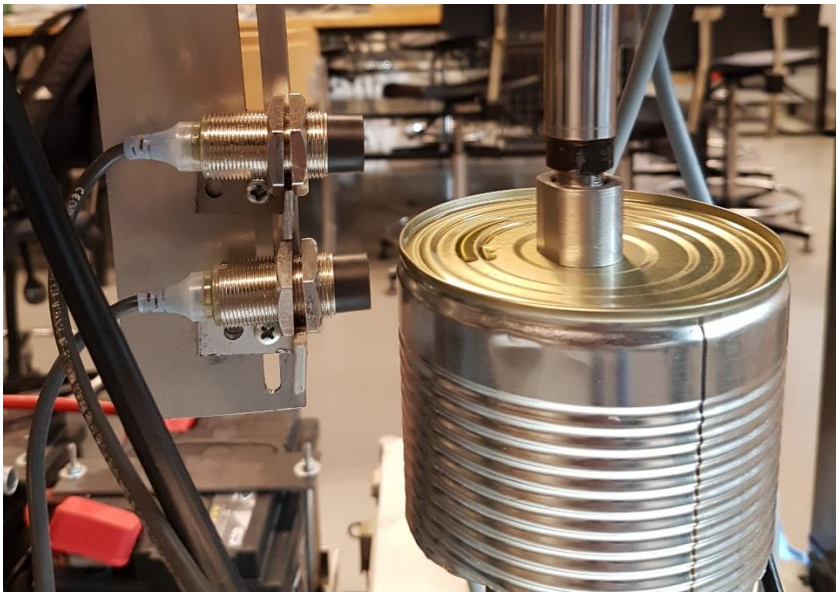

Figure 35. Proximity switches are placed closed to the metal cup, to limit the movement of the hydraulic cylinder

3.6.3 Programming the hydraulic cylinder movement

To operate the hydraulic cylinder movement, system had to be programmed to work in two modes: manual and automatic. These modes could be changed using the “Automatic” switch (Fig. 34).

Manual mode was made to manually control the cylinder movement in both directions in order to calibrate the initial gripper position during the process of specimen instalment.

By turning the switch to the automatic mode, the PLC set the program to operate the cylinder movement in the loop between two proximity switches (chapter 3.6.2). This mode was the main mode for the performing the fatigue test, as it was operating the hydraulic cylinder to apply cyclic motion to the installed specimen.

Figure 36 illustrates the function block related to cylinder upper movement and the indicator control blocks. The main function block, “RS_1” was operating the relay unit, which enabled the upper movement hydraulic valve connector. In the manual mode the stroke could be moved, by simply pressing the up/down buttons on the control panel. When switching to the automatic mode, system required to press the “Start” button to start the test. This would enable cylinder upper movement first. Then, depending on the signal of the proximity switches, the system would establish the following movement direction. When the metal cup was leaving the sensing area of one of the proximity switches,

the program stopped the movement in one direction and started the opposite one.

There were few options, when the cylinder movement is completely stopped:

- When the emergency stop button was pressed, the check valve disabled the flow to the cylinder
- When the control panel “Stop” button was pressed, in case of manual test prevention
- When the metal cup was out of the proximity switches sensing area, meaning that the cup with the gripper was either below or above the sensors. It was because the specimen most probably failed and needed to be removed from grippers

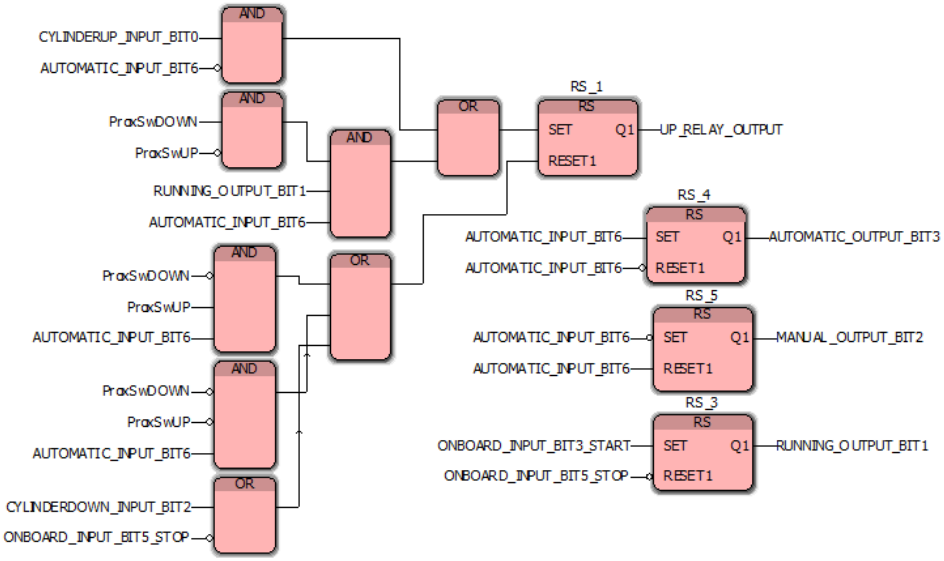

Figure 36. Function block tree controlling the upper cylinder movement (left) and control panel indicator lights (right)

The function blocks, operating the downward cylinder movement can be found in the appendix 2. Their principle was the same to the upper movement, only the functions worked in order to set up the opposite movement.

3.6.4 Programming of the strain gauge unit

To operate the IB IL SGI 2/F-PAC strain gauge unit, a special function block library was downloaded from the Phoenix Contact website. There were four function blocks used in controlling the unit. The figure 37 illustrates these function blocks.

The first unit, “IL_SGI_2F_Offset_V1_00_1”, was used to calibrate the offset of the strain gauge before the start of the test. After fixing the strain

gauge and the specimen, calibration using this function block, would set the output load cell value to zero.

The next function block, “IL_SGI_2F_Para_V1_00_1”, allowed decoding the bit values coming from the load cell into kilograms. The “CharacteristicsCh1” line is to choose the range of operating voltage. In our case the value had to be “3”, as it showed the load value in both tension and compression motion. “NominalWeightCh1” was to set the value of the strain gauge nominal weight in kilograms (200.00 in our case).

The main function block among all the strain gauge unit blocks was the “IL_SGI_2F_V1_00_1”. In here, the user defines inputs and outputs used for the strain gauge, activates or resets the strain gauge, gives command to read or reset minimum and maximum values. In case of any error during the setup the “xError” line will provide the corresponding error code, which are listed in the function block description. The most important function of this block was, that it showed the current load value in the “rValCh” lines.

In our case function blocks were used with only one strain gauge, but there is a possibility of connecting the second one to the channel 2.

“IL_SGI_2F_AddVal_V1_00_1” function block was used for displaying the minimum/maximum values of the force. The number would be read, once the user commands to do so, using the “READ_MIN_MAX” line on the “IL_SGI_2F_V1_00_1”. Resetting of these values could also be done in this function block.

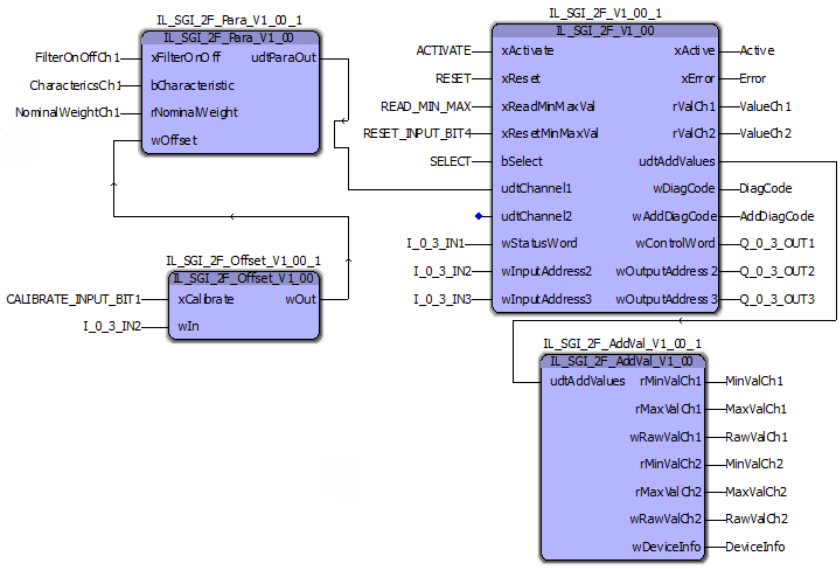

Figure 37. Strain gauge unit function blocks

The main routine for using IB IL SGI 2/F-PAC function block units was as follows:

- Set the characteristics and the nominal weight of the strain gauge in the “IL_SGI_2F_Para_V1_00_1”
- Activate the strain gauge in the “IL_SGI_2F_V1_00_1”
- Filter the values using the “IL_SGI_2F_Para_V1_00_1”.
- Calibrate the strain gauge value to 0 using the “IL_SGI_2F_Offset_V1_00_1”.
- Read maximum/minimum values during the test using the “IL_SGI_2F_AddVal_V1_00_1”.

3.7 Test performance

After installing the hydraulic components, gripping mechanism and finishing the PLC programming, the fatigue test unit was ready for commissioning.

At first, the machine, was run without the specimen at relatively low pressure of 30-50 bars. In these runs, the unit was performing absolutely correct, making the cyclic movement in distance, limited by the proximity switches.

Therefore, we decided to conduct the fatigue test of riveted metal plates at the pressure of 30 bar, in order to check the alignment of the gripping mechanism, as it was one the most important test issues.

Two 200x40x3 mm aluminium plates were riveted with the rivet of 4.9 mm diameter. This specimen was fixed using the grippers and the proximity switches were set according to the specimen length.

On the first run, the specimen's rivet broke almost immediately, after making few cycles. Thus, the number of rivets was increased to five, on the same type of specimen.

Figure 38. Installed alignment specimen of two riveted metal plates

Running the test with the new specimen, demonstrated, that the fatigue testing unit was capable of conducting the test. This specimen failed only after a higher number of cycles, because of the grippers misalignment.

As a result of the test runs, we discovered the fact, that the work on the gripper misalignment must be done, in order to perform the future fatigue testing.

3.8 Future improvements

The forthcoming operations with the fatigue testing unit are to be decided by the management of HAMK Riihimäki. If the work on the unit is going to be continued by the student, there are few factors that could be improved in the machine of current state.

First of all, there should be done an improvement on the grippers alignment in order to eliminate the specimen bending due to that. An alignment run must always be done, before conducting the test with any of the specimen.

Secondly, instalment of the servo-hydraulic valve allows more control and variety in the test performance. There are two servo-hydraulic valves at HAMK Riihimäki, which have to be maintained by Bosch Rexroth. After that they may be used for the aims of the project.

There are also some small improvements that could be done in the future:

- Adding the cycle counter to the PLC software
- Improving the attachment of the proximity switches
- Establishing the way, the sensors exactly are limiting the movement of the hydraulic cylinder. How the distance between the sensors or the length of the metal cup influence the cylinder movement?
- Finding a way of making the S-N curves, to gather the test results. The system now is only capable of taking the force values once the operator commands it to do so. Automation of this process would allow the making of the S-N curves.

4 CONCLUSION

As the result of the work on the project, a fatigue testing of HAMK Riihimäki was developed and commissioned. Future unit improvements were established, so that the unit may be used for making axial fatigue tests and researching the effect of the fatigue on metal or any other material components. The unit may be useful for the future mechanical or automation engineering students, as an example of the fatigue testing machine.

Myself, I gained valuable experience in the field of project engineering. The work on the unit involved using the knowledge the different engineering subjects, such as hydraulics, PLC programming, electrical engineering, mechanical engineering measurements. I was able to apply my knowledge, obtained in the process of studying at HAMK, on practice, by doing a real engineering job. During the project, I have developed the skills of critical thinking, time management and reporting.

REFERENCES

Aeronavlabs (2014, April 8). *Failures of Materials*. Retrieved 2 March from: http://www.aeronavlabs.com/failures_of_metals.htm

Dowling, N. E. (2013). *Mechanical Behavior of Materials.* Harlow: Pearson Education Limited.

Gonzalez, C. (2015). *Engineering Essentials: What Is a Programmable Logic Controller?* Retrieved 1 May 2017 from:
http://www.machinedesign.com/engineering-essentials/engineering-essentials-what-programmable-logic-controller

Götz, W. (1998). *Hydraulics. Theory and Applications.* Ditzingen: Bosch Rexroth AG Service Automation didactic.

Hiatt, J. (2016, June 17). *What is a SN-Curve?* Retrieved 3 May 2017 from:
https://community.plm.automation.siemens.com/t5/Testing-Knowledge-Base/What-is-a-SN-Curve/ta-p/355935

Karppinen, T. (2014, January 29). *Controllers in Automation*. Retrieved 1 February 2017 from:
https://moodle.hamk.fi/

MOOG Inc. (n.d.). *Electrohydraulic Valves...A Technical look.* Retrieved 24 April 2017 from:
http://www.moog.com/content/dam/moog/literature/ICD/Valves-Introduction.pdf

Phoenix Contact GmbH & Co. KG. (2011, July 07). *PC WorX Quickstart Guide.* Blomberg, Germany.

SFS-ISO 1099:en. (2006). *Metallic materials -- Fatigue testing -- Axial force-controlled method*.

Vaisanen, T. (2013). *Fatigue Testing*. Retrieved 23 February 2017 from:
https://moodle.hamk.fi/

Westmoreland Mechanical Testing & Research, Inc. (n.d.). *What is Fatigue Testing?* Retrieved 25 March 2017 from:
http://wmtr.com/What_Is_Fatigue_Testing.html?utm_source=read%20more%20links&utm_medium=banner&utm_campaign=links

Appendix 1

TECHNICAL DRAWING OF THE THREAD REDUCER

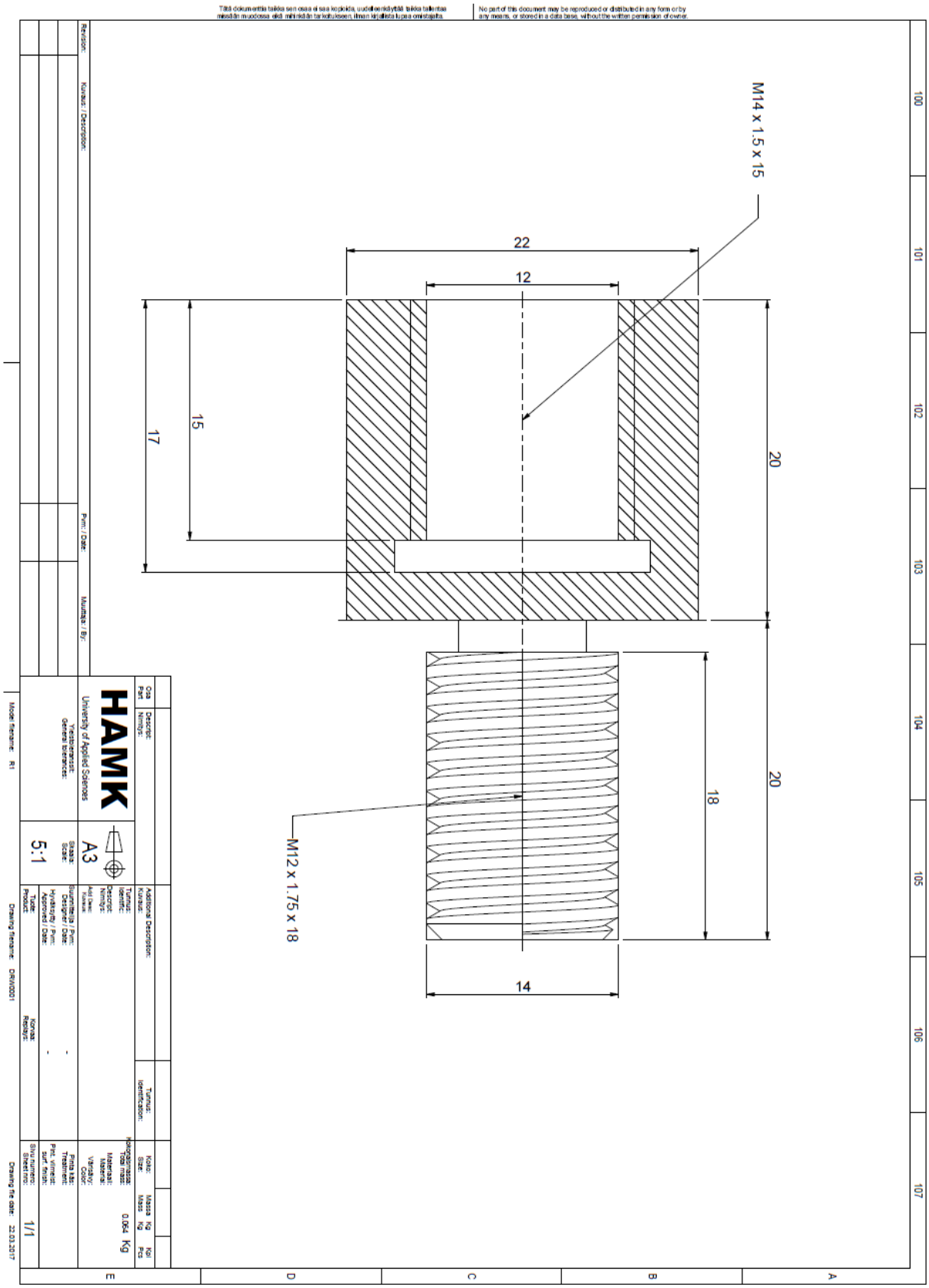

Appendix 2
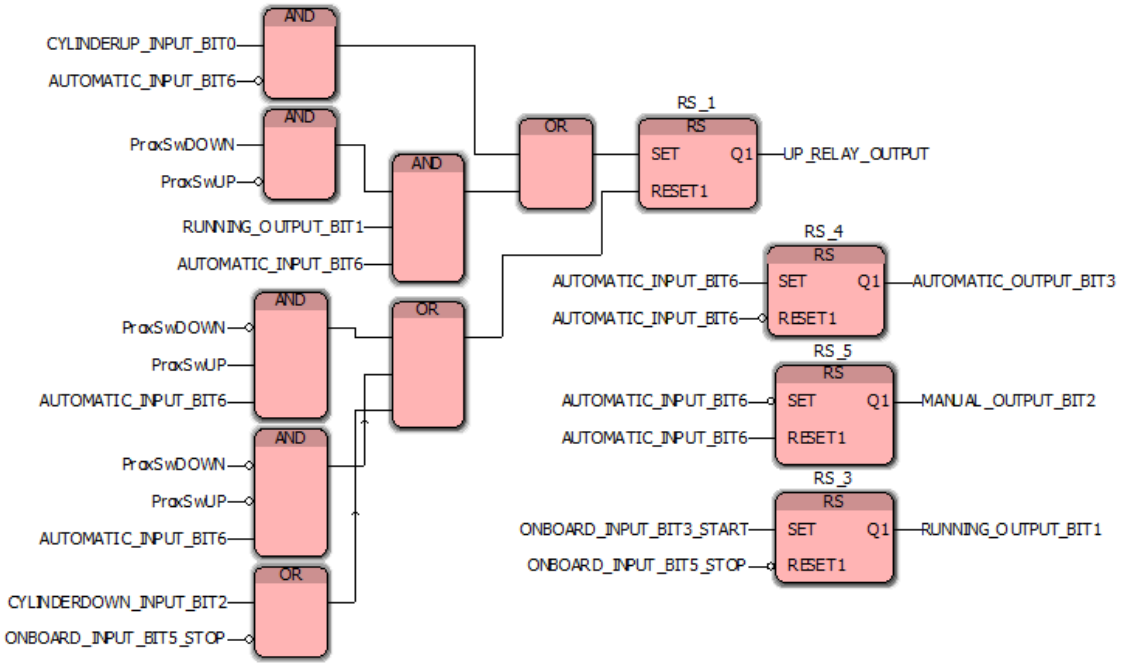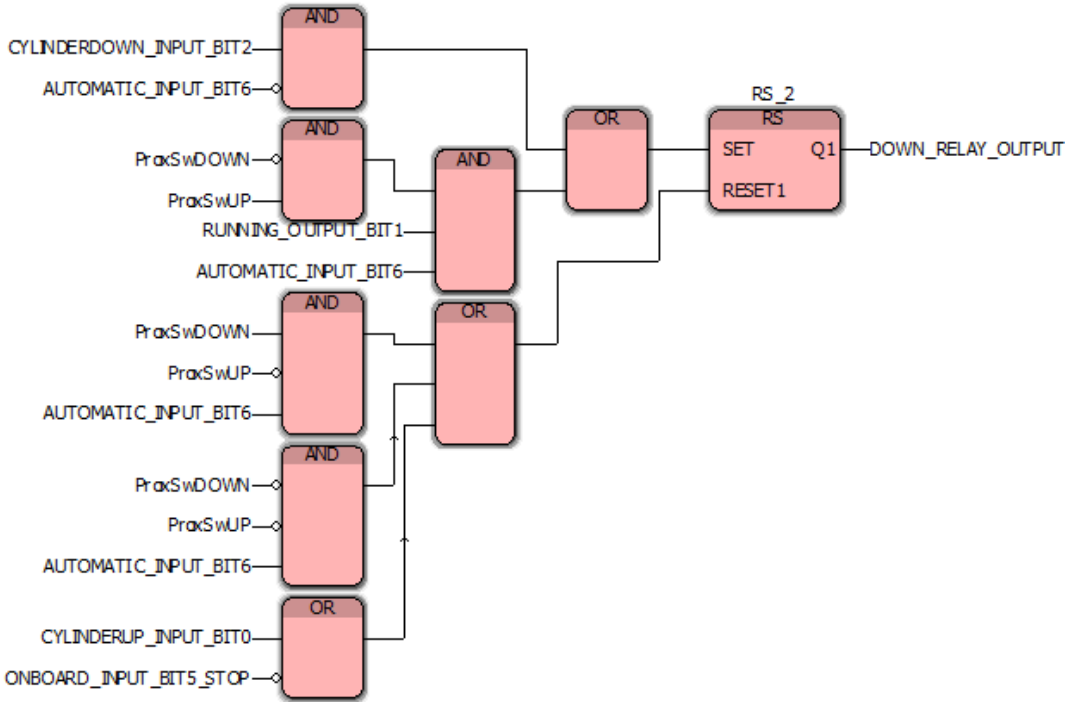
FUNCTION BLOCK DIAGRAMS OF CYLINDER MOTION CONTROL