YRKESHÖGSKOLAN NOVIA

Advanced Self-Aligning Mounting System

André Törnqvist

Bachelor's thesis

Mechanical and Production Engineering

Vasa 2018

BACHELOR'S THESIS

Author:	André Törnqvist
Degree Programme:	Mechanical and Production Engineering, Vaasa
Specialization:	Mechanical Construction
Supervisors:	Kaj Rintanen & Tomas Södö

Title: Advanced Self-Aligning Mounting System

Date: March 9, 2018 Number of pages: 39 Appendices:

Abstract

This thesis has been made for Wärtsilä Marine Solutions. The thesis explores the potential for an advanced self-aligning mounting system within the existing marine market, along with conceptual design of such a system. The system uses air springs for an improved degree of isolation of vibrations and structural noise.

The study builds upon three previously conducted theses within the same subject. The previous studies have focused on the calculation of forces, which the system is subjected to, and the mechanical design of the mounting system.

This thesis includes market research in which the focus has been on the degree of noise isolation needed in vessels today. The results have given light to which applications could see the most use of the mounting system. From the findings in the market research and an investigation of the functionalities and requirements needed, three different conceptual designs have been developed.

Language: English Key words: mounting system, market research, concept generation

EXAMENSARBETE

Författare:	André Törnqvist
Utbildning och ort:	Maskin- och produktionsteknik, Vasa
Inriktningsalternativ:	Maskinkonstruktion
Handledare:	Kaj Rintanen & Tomas Södö

Titel: Avancerad självlinjerande uppställning

Datum: 9.3.2018 Sidantal: 39 Bilagor:

Abstrakt

Detta examensarbete har gjorts för Wärtsilä Marine Solutions. Examensarbetet utforskar potentialen för en avancerad självlinjerande uppställnning inom den existerande marina marknaden, tillsammans med en konceptuell design av systemet. Uppställningen använder sig av luftfjädrar för att uppnå en förbättrad isoleringsgrad av vibrationer och strukturljud.

Arbetet bygger på tre tidigare utförda examnesarbeten inom samma ämne. De tidigare arbetena har fokuserat på beräkning av krafterna uppställningen utsätts för, samt mekanisk konstruering av motoruppställningen.

Detta examensarbete inhåller en marknadsundersökning med fokus på behovet av ljudisolering i fartyg i användning idag. Resultaten har gett en inblick i vilka tillämpningar som kunde ha störst användning av motoruppställningen. Baserat på undersökningsresultatet och en undersökning i vilka funktionaliteter och krav som behövs har tre olika konceptuella designer tagits fram.

Språk: engelska Nyckelord: motoruppställning, marknadsundersökning, konceptgenerering

OPINNÄYTETYÖ

Tekijä:	André Törnqvist
Koulutus ja paikkakunta:	Kone- ja tuotantotekniikka, Vaasa
Suuntautumisvaihtoehto:	Koneensuunittelu
Ohjaajat:	Kaj Rintanen & Tomas Södö

Nimike: Kehittynyt itseasettuva kiinnitysjärjestelmä

Päivämäärä: 9.3.2018 Sivumäärä: 39 Liitteet:

Tiivistelmä

Tämä opinnäytetyö tehtiin Wärtsilä Marine Solutionsille. Opinnäytetyö tutkii kehittyneen itseasettuvan kiinnitysjärjestälmän potentiaalia olemassa olevilla merimarkkinoilla, sekä järjestelmän käsitteellistä suunittelua. Kiinnitysjärjestelmä käyttää ilmajousia tärinän ja rakennemelun eristysasteen parantamiseksi.

Opinnäytetyö perustuu kolmeen aiempaan tehtyyn tutkimukseen samasta aiheesta. Edellisissä tutkimuksissa on keskitytty niiden voimien laskemiseen, joihin järjestelmä altistuu, sekä kiinnitysjärjestelmän mekaaniseen suunitteluun.

Tähän opinnäytetyöhön kuuluu markkinatutkimus, jossa keskitytään nykyään käytössä olevien alusten äänieristykseen. Tulokset ovat antaneet käsityksen siitä, millä sovelluksilla voisi olla eniten hyötyä kiinnitysjärjestelmästä. Tutkimustulosten ja tarvittavien toimintojen ja vaatimusten tutkimuksen perusteella on kehitetty kolme erilaista käsitteellistä mallia.

Kieli: englanti Avainsanat: kiinnitysjärjestelmä, markkinatutkimus, konseptointi

Table of contents

1 Introduction 1
1.1 Background 1
1.2 Problem definition 1
1.3 Goal 2
1.4 Limitations 2
1.5 Engine dimensions and data 2
1.5.1 Wärtsilä 8V31 2
1.5.2 Wärtsilä Genset 10V31 4
2 Theoretical background 4
2.1 Market research 4
2.2 Concept generation 7
2.3 Earlier research 8
3 Method 12
3.1 Market research 12
3.1.1 Market segments 13
3.1.2 Shipyard benefits 19
3.1.3 Benefits and drawbacks of an advanced self-aligning system 19
3.2 Concept generation 20
3.2.1 Mapping of the functionality and requirements 20
4 Results 23
4.1 Results of the market research 23
4.2 Results of the concept generation 33
4.2.1 Wärtsilä 31 Main engine concept 33
4.2.2 Wärtsilä 31 Genset concept 34
4.2.3 Wärtsilä 31 Double resilient genset concept with advanced self-aligning mounting system 35
5 Conclusion 36
6 List of sources 37

1 Introduction

1.1 Background

This thesis has been conducted for and in cooperation with Wärtsilä Finland Oy, within the division Marine Solutions. Marine Solutions is in charge of providing Wärtsilä's costumers with marine products, the main product being their medium speed four-stroke engines. The thesis is part of a project for a new flexible mounting system for ship engines. The purpose of the project is to develop a new type of resilient mounting system. Resilient mounting is used in most marine engine installations to reduce vibrations and noise, the new system should further reduce these, which can be a demand of high importance for certain vessel types.

1.2 Problem definition

Due to increasing demands from customers and shipyards, vibrations caused by the engine and other driving equipment, good noise isolating mounting is required.

This is commonly solved by using some form of resilient mounts between the engine and the ship foundation. The most common type is using mounts made with rubber compound, as rubber has good isolating qualities and the compound can be made stiffer or softer depending on the needs of the installation. One of the problems with rubber is that it is subjected to creep. This means that the height of the mount decreases and causes the engine and connected external systems to be misaligned, which in turn leads to re-alignment being required. Re-alignment is typically done by inserting shims between the mounts and the ship foundation and or the engine. The process of re-alignment is both time-consuming and costly.

An alternative to using rubber mounts is using air springs. Air springs work as good isolators as they have low natural frequencies and are not subjected to the problem of creeping rubber as the height can be adjusted by increasing or decreasing the air volume inside the springs. In combination with the air springs, an automatic self-leveling system can be used in order to always have the engine in line with the connected external system. Possibly also reducing time for initial alignment and thereby reducing commissioning times.

Previous studies within the subject have been conducted for Wärtsilä, focusing on the vibrational aspect, the design of the system, and the structural strength of the designed system with considerations to the demands made by classification societies. However, the market research remains undeveloped. Investigation of the potential applications, functionalities, and requirements needs to be mapped out.

1.3 Goal

The goal of this thesis is to investigate the potential usage of an advanced self-aligning mounting system. This will be done through a market research, in which the potential applications will come to light. The market research might also reveal applications not considered previously and bring forward benefits and drawbacks previously unknown. Based on the result of the market research, requirements and functionalities needed for the system will be mapped out. Along with the requirements brought to light from the research, internal requirements and demands made by marine classification societies will be considered. Based on the requirements conceptual 3D designs of the engine mounting system will be made. This should create a strong business case with which further development of the system can proceed.

1.4 Limitations

This thesis will focus mainly on the potential for the system from a business standpoint, therefore it has been decided that the design will be limited to a conceptual stage, no detailed design will be made which in turn means no stress, nor vibrational calculations, will be necessary at this stage. For the concept generation it was decided that the Wärtsilä 31-engine would be used, as it is the latest engine from Wärtsilä, the idea was to use newer technologies together.

1.5 Engine dimensions and data

1.5.1 Wärtsilä 8V31

"The Wärtsilä 31 is the first of a new generation of medium speed engines, designed to set a new benchmark in efficiency and overall emissions performance. The Wärtsilä 31 is available in 8 to 16 cylinder configurations and has a power output ranging from 4.2 to 9.8 MW, at 720 and 750 pm." (Wärtsilä Finland Oy, 2017)

The engine features a modular design and is available as Diesel-, Dual fuel- and gas-engine.

Main data and output:

- Cylinder bore 310 mm
- Stroke 430 mm
- Speed 720, 750 rpm
- Maximum continuous output 4880 kW (750 rpm), 4720 kW (720 rpm)

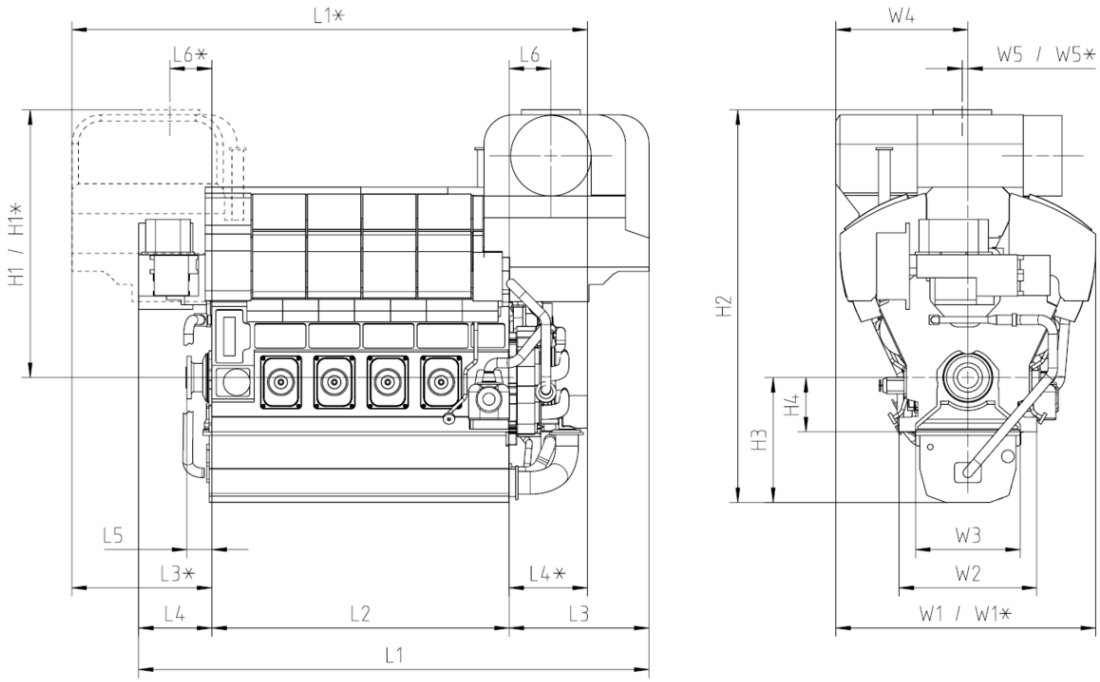

Figure 1. Wärtsilä 8V31 (Wärtsilä Finland Oy, 2017)

Table 1. Dimensions and weight

Engine	L1	L1*	L2	L3	L3*	L4	L4*	L5	L6	L6*	H1
W8V31	6087	6196	3560	1650	1650	877	986	300	500	500	3205
Weight ton**	H1*	H2	H3	H4	W1	W1*	W2	W3	W4	W5	W5*
56.7	3205	4701	1496	650	3115	3115	1600	1153	1585	67	-67

* Turbocharger at flywheel end. All dimension are in mm.

** Weight with liquids (normal wet sump), but without flywheel

1.5.2 Wärtsilä Genset 10V31

Generating sets comprises a generator and diesel engine mounted on a common base frame. They can be used for service power and diesel-electric propulsion. Gensets are resiliently mounted and offer a selection of generator voltage. (Wärtsilä, 2018)

Main data and output:

- Cylinder bore 310 mm
- Stroke 430 mm
- Speed 720, 750 rpm
- Rated engine power 6100 kW (750 rpm), 5900 kW (720 rpm)
- Rated generator power 5855 kW (60 Hz), 5665 kW (50 Hz)

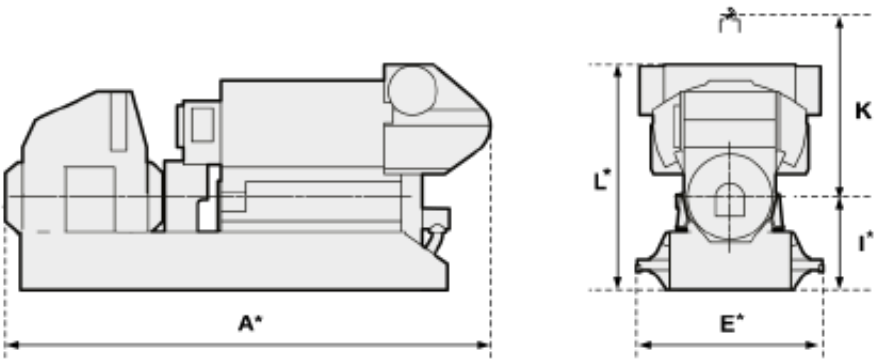

Figure 2. Wärtsilä Genset 31 (Wärtsilä, 2018)

Table 2. Dimensions and weight

Engine type	A*	E*	I*	K	L*	Weight*
10V31	9 750	3 110	1 700	2 390	4 880	101.0

*Dependent on generator type and size.

2 Theoretical background

2.1 Market research

Generally, research can be divided into two types, quantitative research and qualitative research. Quantitative research is based on a high number of input data where statistical patterns can be determined, whereas qualitative research uses a low number of input data but

goes more into depth. Qualitative research is often conducted through interviews, and requires more experience, to be conducted in suitable manner, than quantitative research.

Quantitative research is used for conclusive results and uses a large population for the research. The large population makes it possible to manipulate the data numerically, and analyze and present the results statistically. The method requires the data to be measured and the procedure for obtaining the data to be predefined. The sample used should be representative of the entire population from which it comes from, preferably a randomly selected sample. The analysis consists of precise measurements, the use of mathematical formula, and testing different hypotheses against the data. Results can consist of prediction (i.e. where the market is heading), generalization, and causality of the problem. (McGill Qualitative Health Research Group, n.d.)

Qualitative research is often used for more abstract purposes, such as understanding different phenomena (i.e. human behavior). It can focus on meaning, and may be descriptive to try to define complex matters as cultural dynamics. Data form the research can be consisting of words, behaviors, images, and other things that cannot be measured or numerically manipulated. The data should strengthen the understanding of the phenomena researched instead of being precise and measurable. The method does not require a specific predefined procedure as the goal is exploratory and the project might change during its progress. Collection of the data is done through methods as in-depth interviews or observation of participants. The sample used for the research is collected form a small number chosen by the researcher that is not measurable in neither a mathematical nor a quantifiable way. Analysis of the data can be to build concepts and hypotheses; it relies on categorizing data into different patterns. The results should provide a way to understand the participants view as it is within its social context. Results are contextually based and therefore not aimed to generalize in the same way as quantitative research. (McGill Qualitative Health Research Group, n.d.)

Research can be done by using either primary or secondary data. Primary data is fresh data specifically collected for the purpose of the research. Secondary data is existing data, which is found in statistical databases or previous research. Both of the research methods can be combined, as well as the use of primary and secondary data. (Flodhammar, et al., 1991)

Market research for an industrial market can in difference to consumer directed research rely more heavily on existing data (secondary) but can be complimented by thorough interviews

with a few knowledgeable individuals from selected customer companies or from within the own company. (Flodhammar, et al., 1991)

One of the benefits of secondary data is the time aspect, as the data already exists, time will only be needed to choose out the relevant parts and analysis. In comparison to collection of primary data, which can take up to months, this can be a determining aspect. Another beneficial aspect is that the cost of secondary data is low compared to the cost of collecting primary data; some of the information can even be free. Secondary data can be acquired online, in periodical publications, from associations offering it as a benefit to membership, and government or commercial syndicates. (Block & Block, 2005)

Disadvantages of using secondary data can be that since the original purpose is something other than that of the research being conducted, it may not provide immediate answers. If the data is incomplete, or not as fleshed out as needed for the research conducted, the problem increases. For some research, there can also be problems with the data not being up-to-date. If the industry takes a dramatic change such as large technology advances, new products being introduced, or new governmental regulations, during the time between the collection the data and the conclusion of the research the data can easily be too outdated to use. Another problem can be contradictory information; this can be the case when differing methodology has been used. (Block & Block, 2005)

To avoid problems with the secondary data, what has been done in the past by others in the same industry or in the same company should be routinely examined. Secondary data can provide a different perspective than data collected from the same corporate culture, which can help to identify where biases lie and erroneous interpretation are likely. The main reason for the use of secondary data is data it is often the only information available within the timeframe. “Examination of secondary research is much better than the examination of no information at all.” (Block & Block, 2005)

Collected quantitative data needs to be analyzed statistically in order to be able to make understandable and presentable results. This is often done with descriptive statistics as averages and percentages. It is important not to use to precise values for percentages as it indicates a false accuracy, the sample size also needs to be in sizes of hundreds or more for percentages to be a good way of presenting. Averages can also be misleading, and giving values that makes little sense, in such cases, a median value might provide insight that is more useful. (Block & Block, 2005)

Another option is graphical analysis, visuals can often be easier to grasp and understand than numbers. Graph type is dependent on the data and comparisons made, and should not draw the attention to nonessential points. A good graph can make the results easier to understand but the application needs to be considered, at times a table may give just as good, or better, of a picture than graphs. (Block & Block, 2005)

2.2 Concept generation

A product concept refers to the first approach to a solution for a construction. This solution can contain a preliminary layout of the product with rough estimates of spatial needs, a cost estimate, technical descriptions of the principal solutions, a description of the solutions properties in comparison to the product specification, reasons for choices of partial solutions, and a summary of calculations, analyses, and experiments conducted with their results. (Johannesson, et al., 2013)

Manufacturing cannot be done with only such a conceptual description. In order to manufacture a functional prototype the concept needs to be further developed, to include a full description of all details and components. (Johannesson, et al., 2013)

The base of conceptual generation is the product specification; if this is done thoroughly with all functional criteria, the concept should include consideration for everything necessary. Ideally, the problem should be described more abstractly and wider than in the specification, to give more room for varying solutions. A function analysis would be made to describe all the functions the product needs and the different components of the product. From this, all partial functions should be given a solution, and their interactions should create a solution to the complete problem. (Johannesson, et al., 2013)

Solutions for the partial functions can be found either by using creative methods, as brainstorming, or by using systematic and rational methods. The partial solutions are combined into a complete solution. The complete solution should fulfill all criteria made by the product specification and be achievable in technical, economical, ergonomically, and environmental aspects. It should also contain geometrically and physically compatible solutions. (Johannesson, et al., 2013)

A finished concept is evaluated against how well it fulfills the criteria of the product specification. Systematic evaluation and decision matrixes are helpful tools for comparing

different concepts value and quality, where each partial function is given a score based on how well it fulfills the criteria. (Johannesson, et al., 2013)

2.3 Earlier research

Previously, three studies for Wärtsilä Marine Solutions within the same subject have been carried out. One in 2011 by Anders Wasberg as a Bachelor's thesis, at Novia University of Applied Sciences in Vaasa. The study was conducted as a pre-study for a mounting system using air springs in V-configuration. The focus of the study was the forces that the springs and system are subjected to. As a result from his study came a force calculation tool in Excel.

In the first study, existing design models and mounting configurations were presented and compared. Based on the capabilities of a V-configuration, it was selected for the mounting system. The configuration was selected in favor of the others due to the advantages with regards of rolling and trim that occurs in ships due to the movements of the sea. V-mounting prevents the engine from rolling. The configuration also offers small movements at the flexible coupling. (Wasberg, 2011, pp. 2-9 & 15)

From the force calculation tool, the forces affecting the air springs in a worst-case scenario are provided. This is achieved by adding transverse and longitudinal inclination (roll and trim), the weight of the engine, the torque form the engine, distances on the engine and mounting system, the number of air springs, and the element angle. To calculate the worst-case scenario, roll, trim, and maximum torque are added. The axial and radial forces (F_{1x} and F_{2x}, F_{1y} and F_{2y}, pictured below) are used in order to select a sufficient air spring. The reaction forces (F_1, F_2) can be used for calculation of stress and displacement.

Roll	18	[°]
Trim	6	[°]
Element angle (α)	45	[°]
Engine weight	33300	[kg]
Torque	38200	[Nm]
Distance c.o.g to element center (horisontal)	0,816	[m]
Distance c.o.g to element center (vertical)	0,965	[m]
Bellow diameter	0,4	[m]
Element per engine side	7	
Distance c.o.g to F element	1,175	[m]
Distance F to D element	2,94	[m]

Case Roll		
F1	52,90	[kN]
F2	14,60	[kN]
Case Roll and Trim		
F1	69,27	[kN]
F2	21,88	[kN]

Bellow		
$F1_{axial}$	43,81	[kN]
$F1_{radial}$	29,65	[kN]
$F2_{axial}$	14,37	[kN]
$F2_{radial}$	2,55	[kN]
Bellow		
$F_{A\,axial}$	57,74	[kN]
$F_{A\,radial}$	38,28	[kN]
$F_{B\,axial}$	21,37	[kN]
$F_{B\,radial}$	4,66	[kN]

Roll+ Torque		
mg	46,67	[kN]
Fm (to element)	3,34	[kN]
F_{1y}	37,41	[kN]
F_{1x}	7,21	[kN]
β_1	79,09	[°]
F_{2y}	10,32	[kN]
F_{2x}	7,21	[kN]
β_2	55,06	[°]

Roll and Trim+ Torque		
x	0,10	[m]
l_1	1,07	[m]
l_2	1,87	[m]
m'g	64,25	[kN]
F_{1y}	48,98	[kN]
F_{1x}	9,93	[kN]
β_1	78,54	[°]
F_{2y}	15,47	[kN]
F_{2x}	9,93	[kN]
β_2	57,31	[°]

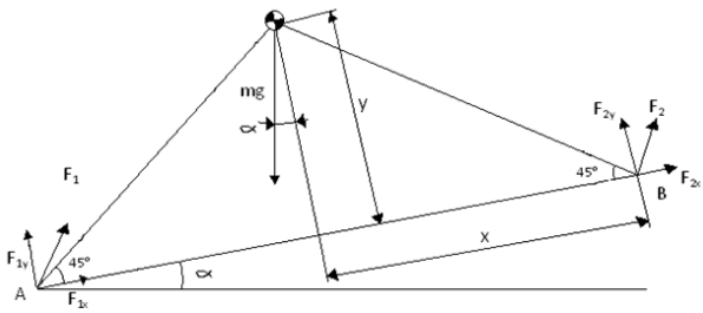

Figure 3. Force calculation tool (Wasberg, 2011, p. appendix 1)

Filip Långbacka conducted the second study in 2012. The second one was also a Bachelor's Thesis at Novia University of Applied Sciences in Vaasa. The study's purpose was the mechanical design, fulfilling the classification rules by DNV, of a self-aligning system for the Wärtsilä 12V46F engine. The study resulted in a preliminary 3D model of a mounting system. For some of the parts, stress and strength calculations were carried out, along with the selection of a supplier for air springs.

The preliminary 3D model from the second study was made using a top down approach, meaning that the components closest to the engine block were made first working the way down towards the ship foundation. The assembly was made using a simplified engine block and existing standard components.

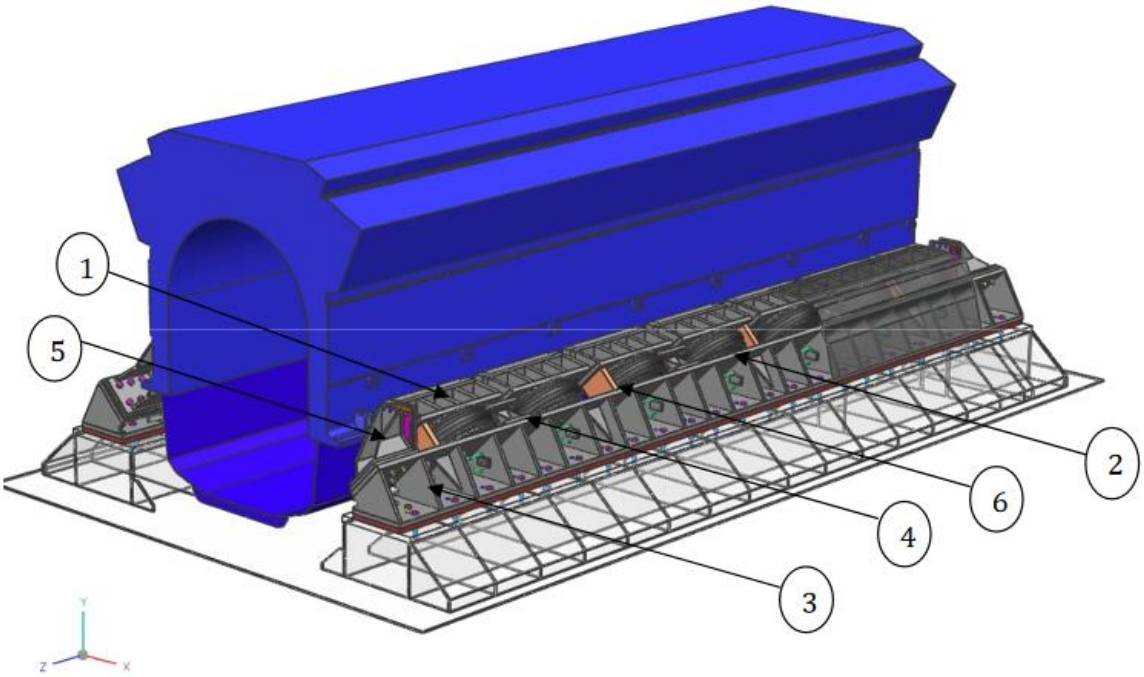

Figure 4. The complete assembly of the mounting system. (Långbacka, 2012, p. 11)

The system uses upper fixing rails made as separate parts, bolted to the engine block. This means that the same fixing rail can be used on all W46F engines. Strength calculations for the buffers and transport brackets were carried out and modified according to the results. By using the force calculation tool, an air spring manufactured by ConiTech was selected. (Långbacka, 2012)

The third study, a Bachelor's Thesis at Novia University of Applied Sciences in Vaasa, was done by Sakarias Widner in 2013. The purpose was to further develop the 12V46F mounting system using Finite Element Analysis, and study the rules made by classification societies. A cost calculation for the manufacturing of one part was also conducted. The study resulted in a strengthened mounting bracket, production drawings, and a cost calculation indicating that designing brackets as separate parts made manufacturing cheaper.

The third study continued developing the preliminary 3D model from the second one using finite element analysis. To get a good result the torque from the engine was calculated. The torque along with the weight of the engine, 22.5° roll, and 10° trim provided the reaction force, which were applied to the surface of the fixing rail. The fixing rail was constrained as if the surfaces in contact with the engine block were fixed in place. Initial results showed that the fixing rail was quite flexible and was therefore stiffened by increasing the amount of support between the lateral plate in contact with the engine block and the angular where the air spring is fastened. (Widner, 2013)

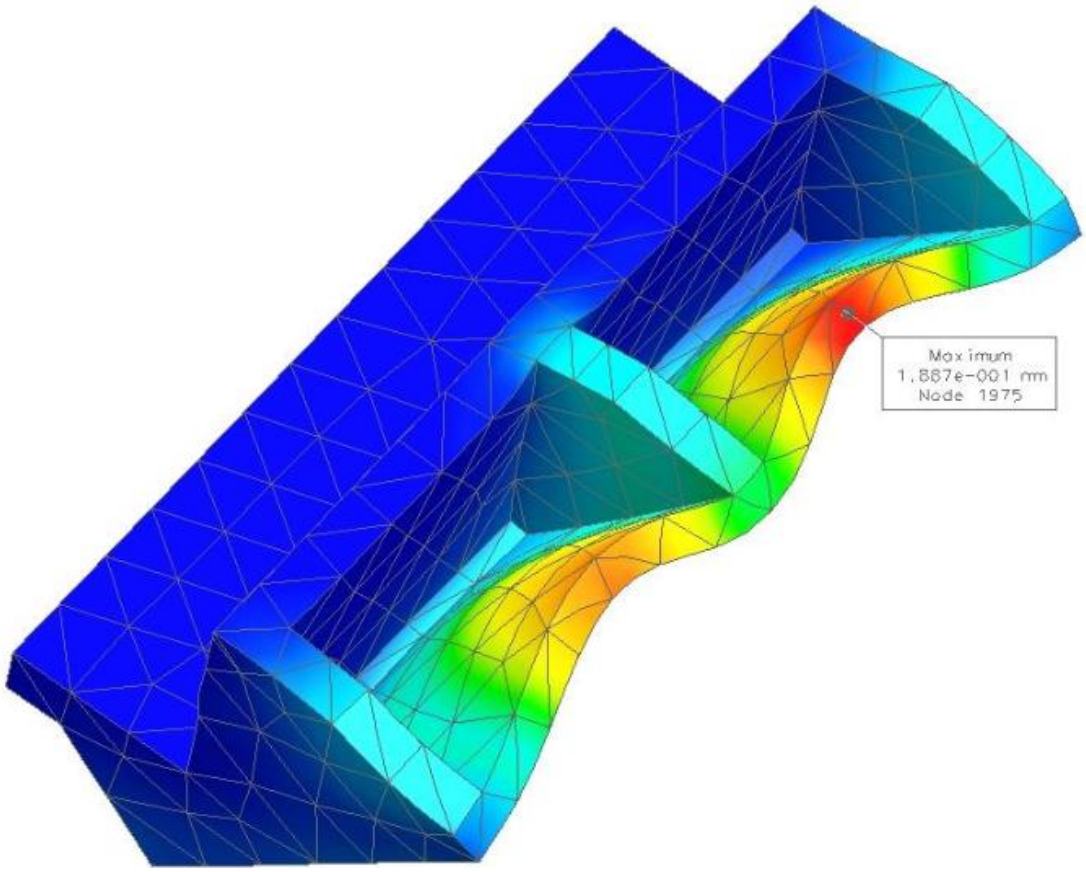

Figure 5. Initial FEA displacement results of the fixing rail (Widner, 2013, p. 25)

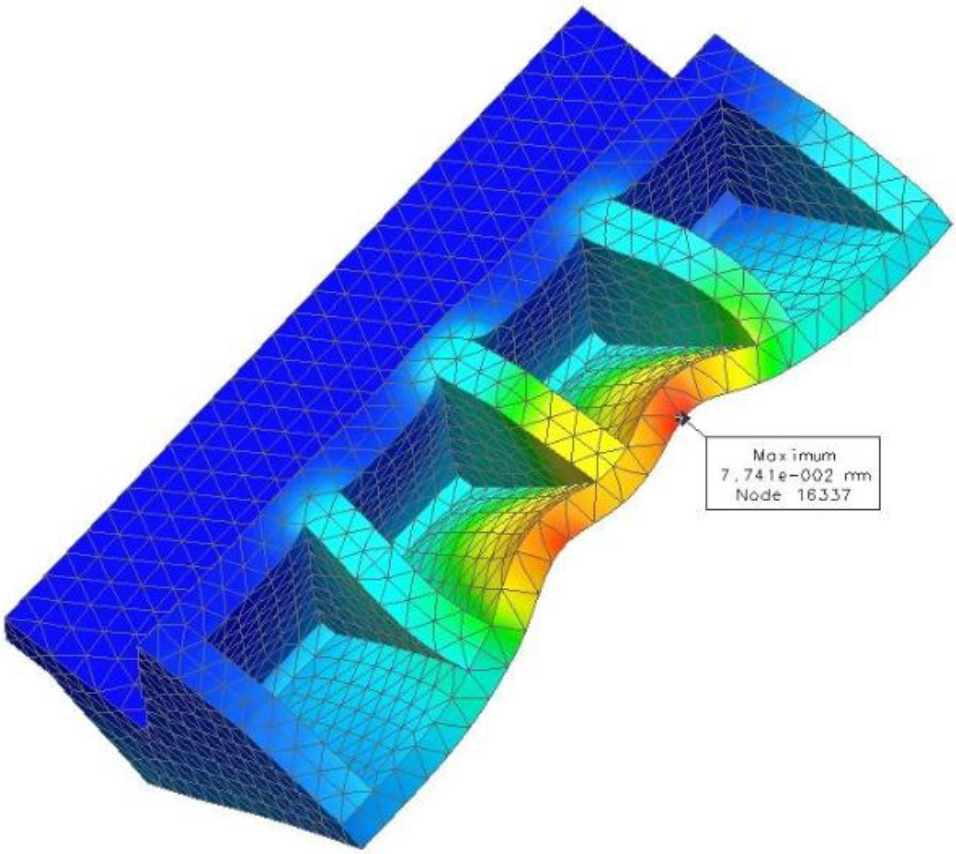

Figure 6. FEA displacement results of the strengthened fixing rail. (Widner, 2013, p. 27)

The strengthened fixture gave higher stress results due to the stiffer structure making the stress spread out more evenly in the material. Due to the stress being lower than the yield strength of the material, the deformation would not be permanent with a safety factor of 2.3. (Widner, 2013, p. 27)

The cost calculation for the upper fixing rail included the cost of raw material, welding, and machining. Comparing the cost of the fixing rail with a prototype using two long rails per side of the engine previously designed and manufactured by Wärtsilä, showed that manufacturing of the component as separate would be approximately 20% cheaper. (Widner, 2013, p. 29)

3 Method

3.1 Market research

To conduct the research, a quantitative method was chosen using secondary data. This approach was chosen due to the time available and the limited experience in conducting market research. A qualitative approach might have given better light into customer needs, but would not have been possible to complete within the timeframe, and experience available.

In order to conduct the market research a data sample in the form of an Excel-document of roughly 7000 vessels was collected. The sample was collected from Clarksons World Fleet Register. Clarksons is a company which provides a number of shipping related services, one of which is research of the shipping and trade-, and, offshore and energy- markets. Their research team is located in the UK and China. The research is certified to ISO9000 and offers over 50 years of data. (Clarksons, 2018)

The sample collected was limited to vessels either in service, or commissioned, ranging from vessels built from 2014 to 2018. The sample includes the status of the vessel, the type, gross tonnage, build year, length of the vessel, main engine designer and type, the type of power solution, the group that the vessel belongs to, and the name of the vessel.

3.1.1 Market segments

Within Wärtsilä Marine Solutions, the market segments are divided into five main groups: Merchant, Cruise and ferry, Special vessels, Offshore, and, Navy. These segments are divided into smaller groups for different types of vessels.

Examples of vessels within each segment:

Merchant: Cargo vessels, different types of carriers, tankers, container vessels, reefer vessels, car carriers and RoRo vessels, and multipurpose vessels.

Figure 7. Picture showing a general cargo vessel, container vessel, bulk carrier, and crude oil tanker. (Wärtsilä Marine Solutions, 2013)

Offshore: Supply vessels, anchor handling towing supply tugs (AHTS), jack up rigs, drillships, floating production storage & offloading (FPSO), semi-submersible rigs, construction vessels, pipe layers, diving support vessels, accommodation platforms, research vessels, fixed production platforms, and seismic survey vessels

Figure 8. Picture showing an offshore supply vessel, a FPSO, an AHTS, and a semi-submersible rig. (Wärtsilä Marine Solutions, 2013)

Cruise and ferry: Passenger & cargo vessels, passenger vessels and ferries, yachts, cruise ships, crew boats, sailing ships, passenger landing vessels, high-speed passenger vessels, and hovercrafts.

Figure 9. Picture showing a passenger & cargo vessel, yacht, ferry, and a cruise ship. (Wärtsilä Marine Solutions, 2013)

Navy: Patrol boats, landing craft, submarines, fast attack craft, frigates, survey / research ships, anti-ship attack vessels, corvettes, training ships, minesweepers, destroyers, surface to air missile launchers, torpedo and missile recovery ships, and aircraft carriers.

Figure 10. Picture showing a patrol boat, fast attack craft, submarine, and a landing craft. (Wärtsilä Marine Solutions, 2013)

Special vessels: Fishing vessels and trawlers, barges, tugs, dredgers, inland tankers and cargo vessels, pilot vessels, firefighting vessels, icebreakers, semi-submersible heavy lift vessels, and lightships.

Figure 11. Picture showing a fishing vessel, dredger, tug, and inland tanker. (Wärtsilä Marine Solutions, 2013)

A table showing vessel types from each segment and an applicable advanced self-aligning solution for each vessel was created. The vessels were given the designations: NA for not applicable, M for main engine and G for genset. The chosen designation was decided based on which power solution is the most common for the vessel type. Some were given multiple options due to the power solutions in use being diverse, or because of the size variations that varies from vessel to vessel. NA was given to vessels were the benefits of the system would be close to non-existent, or for vessels that might be simply too large or too small for Wärtsilä's medium speed four-stroke engines. Most of the vessels were given an applicable solution, but it must be considered that it might not be feasible for all.

Table 3. Applicable solution for vessel types in each segment.

Segment	Vessel type	Applicable solution NA: not applicable, M: main engine, G: genset
Merchant	Cargo	NA/M
	Carrier	M/G
	Tanker	NA/M
	Container	NA/M
	Reefer	NA/M
	Car & RoRo	M/G
	Multipurpose	NA/M
Offshore	Supply	M/G
	AHTS	M
	Jack up rig	NA
	Drillship	G
	FPSO	NA/M
	Semi-sub. rig	NA
	Consturction	NA/M
	Pipe layer	NA/G
	Diving support	M/G
	Accomodation platform	NA/G
	Research	M/G
	Fixed production platform	NA
	Seismic survey	M/G
Cruise & ferry	Passanger & cargo	M/G
	Passanger	M/G
	Ferry	M
	Yacht	M/G
	Cruise ship	G
	Crew boat	M
	Sailing ship	NA/M
	Passanger landing	M
	High speed passanger	M
	Hovercraft	NA
Navy	Patrol boat	M
	Landing craft	NA
	Submarines	G/M
	Fast attack craft	M/G
	Frigate	NA/M
	Survey/research ship	M/G
	Anti-ship attack	NA/M
	Corvette	NA/M
	Training ship	NA/M
	Minesweeper	M/G
	Destroyer	NA
	Surface to air missile launcher	NA/M
	Torpedo & missile recovery	NA
	Aircraft carrier	NA
Special vessels	Fishing & trawler	M
	Barge	NA
	Tug	M
	Dredger	M
	Inland tanker & cargo	M
	Pilot	NA/M
	Fire fighting	NA/M
	Icebreaker	M/G
	Semi-sub. heavy lift	M/G
	Lightship	NA

As of July 2014, all new vessels of 1600 gross tonnage and above must comply with the IMO Noise Code, increasing the demand for vibration isolation of engine equipment. The code requires and recommends; the noise levels and exposure are to be measured, the seafarer must be protected from noise-induced hearing loss when it is not suitable to limit the noise to a non-harmful level. Limits on the acceptable noise levels for spaces that the seafarers normally have access to and verification of acoustic insulation between accommodation spaces.

The purpose is to provide safe working conditions with consideration of communication and hearing audible alarms, and avoid interfering with decisions made for control stations, navigation, radio spaces, and spaces for manned machinery. To provide the seafarer with an acceptable degree of comfort in rest and recreation is also considered. Ships above 10000 gross tonnage have somewhat higher requirements of the noise levels in accommodation spaces. (IMO - International Maritime Organization, 2012)

In order to further categorize the vessels, a formula specifying to which Wärtsilä segment the vessels belongs to was created. Based on the gross tonnage and types, another formula specified whether the IMO Noise code was applicable in a separate column. This was done by simply marking “Yes” for vessels which the code applied, “No” for vessels that do not apply, and “Unknown” for vessels where info on the gross tonnage were missing.

The market share of each segment was calculated, and a pie chart showing the percentage was created. Similarly, the engine manufacturer market shares were calculated, and a pie chart showing the 13 largest manufacturers share was created. Manufacturers with less than a one percent share of the market were grouped together to a category called “Others”. For more than 20% of the vessels the engine manufacturer was unknown.

In order to get some information on the noise requirements for the vessels, and to provide an idea of a potential market for the advanced self-aligning system, the amount of vessels for which the IMO Noise code applies was calculated. This was further investigated by checking the amount for each segment, and then checked whether the percentage of overall manufactured vessels manufactured which the noise code applies for has increased or decreased. All accompanied by charts.

To get an idea of what vessel size ranges have the highest amount of vessels needing to apply to the IMO Noise code, chart showing the amount of applicable vessels by length and gross tonnage were created.

For merchants vessels, general cargo vessels, bulk carriers and crude oil tankers make out the three most common types. The needs and demands for these vessels lies in transporting as much as possible with the highest possible fuel efficiency. For this segment, the advanced self-aligning mounting system has few benefits, as comfort and low vibration noise has low priority due to transportation of goods being the primary function. In order to comply with the IMO Noise Code the system could be of use. Vessels as nuclear fuel carriers could see potential use of the system due to the sensitive cargo transported; however, the need for redundancy systems and the specialization of the vessels make it unlikely for these vessels to see use of the system. Drawbacks for using the system would be mainly be the cost and the little benefit. For many of these vessels a traditional resilient mounting system or rigid mounting would be more beneficial.

Within the cruise and ferry segment, the advanced self-aligning system could have great use, as especially cruise ships and yachts demand comfort for those traveling aboard. With an advanced self-aligning system, most of the vibrations could be isolated providing a good setup. For this segment, a genset solution might see more use, while smaller vessels could still see use of a system designed for a main engine. The drawbacks are the cost and higher demand on space in the engine room.

The special vessels segment is quite diverse and the use for an advanced self-aligning system varies depending on the type of vessel. As most of the ships focus on one task there could still be benefits of an overall better performing vessel. However, especially fishing vessels and tugs tend to have limited space in the engine room making an advanced self-aligning system impractical. The IMO Noise Code also does not apply to fishing vessels making it unlikely for a customer to see need for such a system. Although, reducing the emitted noise from the vessel could potentially have a positive impact on the catch, as the low frequency noise of a vessel is audible to fish. However, it is not known how fish react to the noise. (Pettersen, 2017)

Icebreakers used for support of scientific research in the Polar Regions could see benefits from using the system as they can be used to accommodate the research crew and carrying supplies for research stations. For vessels like dredgers with equipment that can cause shocks and vibrations when used, the system could be used for isolating and protecting engine equipment, and prolonging the lifecycle, more so than isolating the ship from the engine vibrations.

In the offshore segment, there are many possible uses for the system, as it is made up of many specialized vessels where low vibrations and structural noise can be a demand. Vessels made for research and seismic survey can be equipped with apparatus that are sensitive to structural noise and vibrations. For such vessels, the benefits of the system would outweigh the cost.

As for the navy segment reducing all forms of vibrations, and thereby reducing overall noise from the vessel, can make the vessel harder to detect. For some types of vessels, such as submarines and minesweepers, this can be a key property, making the advanced self-aligning system a possible option.

3.1.2 Shipyard benefits

For the shipyard, the system could speed up the commissioning times, as the initial alignment of the system would not have to be as precise. The system could with the help of its position sensors be set up to account for smaller misalignments. The need for realignment that is required for traditional resilient mounts made of rubber compound as the rubber is subject to creep could also be eliminated, as the system would not be subject to creep. (Wasberg, 2011, p. 10) Since the alignment would not have be as precise, less people involved in the installation of the engine would be needed, reducing cost and need for Wärtsilä personnel at the shipyard.

3.1.3 Benefits and drawbacks of an advanced self-aligning system

Overall, the main benefit of the advanced self-aligning system is the reduction of vibrations and structural noise transferred to the ships foundation, while also eliminating the need for realignment. Reducing vibrations and structural noise could in addition to providing comfort, also be a potential cost reducer in isolating materials used on walls and floors of a ship. As the structural noise transferred from the engine to the ships foundations decreases, the need for isolation follows.

For certain types of vessels with equipment causing shocks, the system would protect the engine and its components from taking damage.

Realignment is required for traditional resilient mounts made of rubber compound as rubber is subject to creep. Eliminating this need means reducing time when the engine is non-operational. The system could be set up to account for smaller misalignments.

The main drawback of this system is the cost, as it not only requires mounts but also a control system, air supply, and specially designed fixing components. Another drawback is the increased space the system takes up in the engine room, as in order to have enough lifting capacity and redundancy in case of failure, the air springs need to have a large diameter. This drawback mainly concerns a system designed for a main engine, as a genset solution can use more mounts reducing the need for springs with large diameter while keeping redundancy.

3.2 Concept generation

The basis for the concepts created were previous designs of flexible mounting systems and gensets, as the one presented in Chapter 2.3, along with the mapped functionality and requirements. The finding from the market research was also taken into consideration when choosing the type of engine for which the concepts were to be designed. The concepts were created in Siemens NX 3D-cad software, using existing simplified engine models to get the engines dimensions.

3.2.1 Mapping of the functionality and requirements

In order to function as a good mounting system the advanced self-aligning mounting system needs to fulfill certain requirements and have certain functionality. The requirements and the functionality can vary depending on the segment the system is to be used for and the type of system that will be used. A number of these functionalities applies regardless of segment and type. Such are requirements made by classification societies and those specified in the engine's product guide. One such requirement is the need to be able cope with the requirements of inclination angles stated both by classification societies, and by the Wärtsilä Product Guides.

Main and auxiliary machinery has to be able to work with 15 degrees of static, and 22.5 degrees of dynamic inclination athwartships (sideways/roll). In the fore and aft of ships, the inclination values are 5 degrees of static inclination, and 7.5 degrees of dynamic. The inclinations may occur simultaneously in athwartships, fore and aft. (DNV GL AS, 2016, p. 16)

The Wärtsilä Product Guides (W20, W31, and W32) states slightly higher fore and aft inclinations of 10 degrees, both static and dynamic. (Wärtsilä Finland Oy, 2017a, 2017b, 2017c)

These angles affect the load that the mounts and fixing components will need to withstand. They will, along with the forces produced from the torque of the engine be the main dimensioning forces for all components.

As the system is considered a main function (structural strength), the redundancy requirements state that a single failure in an active component must not cause a reduction of the power output for the main function. The active component in this case would be the air spring; therefore, the springs need enough lifting capacity to work even with one inactive. The system falls under redundancy type 2, which means that a failure is allowed to cause a time lag in re-establishment no longer than 10 minutes. As the system has more than two components performing the same function, they need to be either, mutually independent or, at least one independently driven. Furthermore, the systems automatic control need to have an alternative arrangement for attendance and operation. (DNV GL AS, 2016, pp. 7-8, 17-18)

The movement of the engine must be limited to avoid misalignment and damaging components. Engine movement also affects engine connections and flexible connections only allow for limited displacement. Excessive movement would also cause additional vibration. To combat this the system needs to be able to cope with, and reduce the impact of seaway movement.

For alignment, the system needs a control system with height sensors keeping track of the height of the engine in relation to the driven equipment. The control system needs to be set up in such a way that it will always strive to keep the engine aligned to the external system connected to the crankshaft.

For safety measures buffers limiting engine movement and keeping the engine in place in case of rough seaway movement or, at worst case, capsize, are needed. The buffers must be strong enough to withstand the weight of the entire engine and any additional forces it might produce.

To be able to carry out maintenance and repairs in a safe and time efficient manner must be considered. Replacement of a failed mount must be quick and accessible.

For transportation of the engine from factory to shipyard, transportation brackets will be needed in order to avoid damaging the air springs during moving and lifting of the engine.

These brackets must keep the upper part from moving in relation to the lower part of the system, and therefore be able to withstand the weight of the engine. ‘

In order to be able to use the system in as many types of ships as possible the system needs to have as small of a footprint as possible. If the outer dimensions of the system get excessively large, some potential customers might opt out simply because the system would not fit without affecting the outer dimensions of the vessel.

Due to the possibility of leakage of fuel oil or lubrication oil, the system needs resistance to oil and other substances that might damage rubber or shorten the lifecycle. This could be achieved with covers protecting the air springs. Covers would also protect the bellows of other environmental elements and against potential falling objects.

The main function of the system is to reduce the vibrations and structural noise transferred form the engine to the ships structure. In order to ensure this is the case, vibration calculations, measurements, and testing of the finished system have to be carried out.

Some segments might need even further vibration isolation, in order to achieve this; a double resilient mounting solution would be used. A genset approach would be used, but instead of mounting the engine directly to the base frame, a v-mounting solution would be used between the engine and base frame. Between the base frame and ship foundation, rubber mounts would be used to avoid making and overly complicated and costly design. This would be the most complicated approach, as the system would not only have to remain aligned to itself but also the generator connected to the crankshaft.

4 Results

4.1 Results of the market research

The purpose of the research was finding how big the potential market for an advanced self-aligning mounting system would be, along with finding which types and sizes of vessels would have the most benefit of the system. The main aspect focused on was which vessels need to comply with the IMO Noise Code.

The first thing investigated was the percentage each segment holds of the market. This was done by specifying the segment for each vessel (by Wärtsilä's specifications of the segments). The amount of vessels in each segment was counted and divided by the overall number of vessels. From the results, a pie chart showing the percentage was created, presented below.

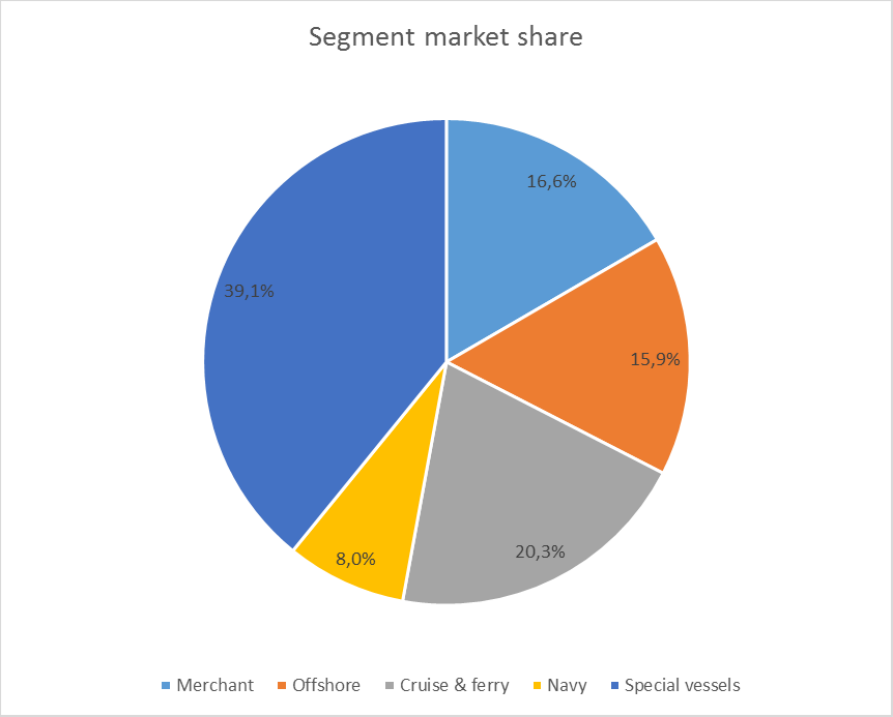

Figure 12. Pie chart showing the segment market share in percentage.

The largest segment is by far special vessels, with almost 40 % of the market, while the smallest is navy with only eight percent. The three remaining segments share the reminder fairly equally, with cruise & ferry taking up a somewhat bigger share.

This was followed by investigating the percentage of the market share different engine manufacturers hold. Similarly done by counting vessels with each engine manufacturer, and dividing by the total number. Manufacturers holding less than a one percent share of

the market were grouped together into a category called “Others”. A pie chart was created.

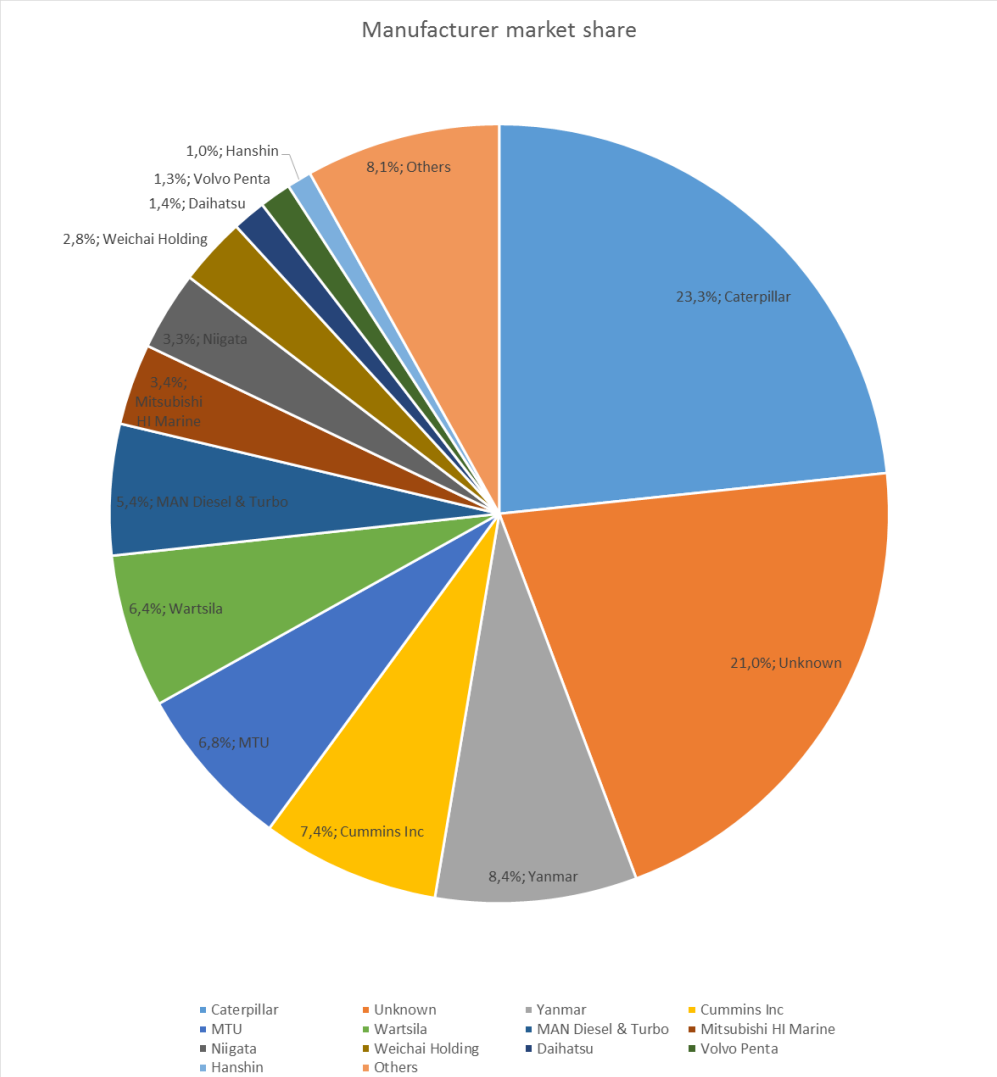

Figure 13. Pie chart showing engine manufacturers market share.

Caterpillar, likely due to their extensive range of 4-stroke engines, offering a wide power range, holds the largest portion. Yanmar, Cummins Inc., MTU, Wärtsilä, and MAN Diesel & Turbo each hold significant portions, between five and ten percent. Yanmar, MTU, and Cummins Inc. offer smaller engines in a low to medium power range, MAN Diesel & Turbo and Wärtsilä mainly offer larger engines in a medium to high power range.

As the engine manufacturer remains unknown for 21% of the sampled vessels, the margin of error is quite high.

The amount of vessels needing to apply to the IMO Noise Code was investigated. This was done by checking the amount of applicable, non-applicable, and vessels were the necessary info was unknown. It was checked for the entire sample, giving an overall view, for each

segment, and for power types per segment. A chart showing how it has changed over the years was also created, along with two charts showing how it depends on vessel size, one by overall length of the vessels, and one by gross tonnage.

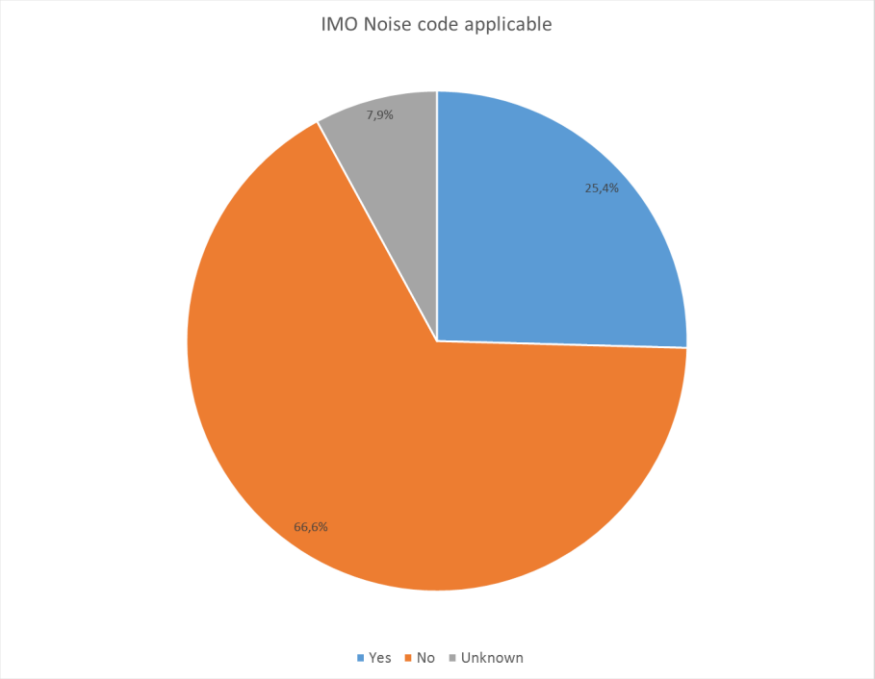

Figure 14. Pie chart showing the percentage of IMO Noise Code applicable vessels within the entire sample.

Out of the entire sample, roughly a quarter of the vessels falls within the requirements for the IMO Noise Code to be applicable. For eight percent of the sampled vessels the gross tonnage is unknown, making it impossible to determine whether the Noise Code applies. Two thirds of the sample do not need to apply to IMO Noise Code, either because of a gross tonnage below 1600, or due to a type of vessel for which the code does not apply.

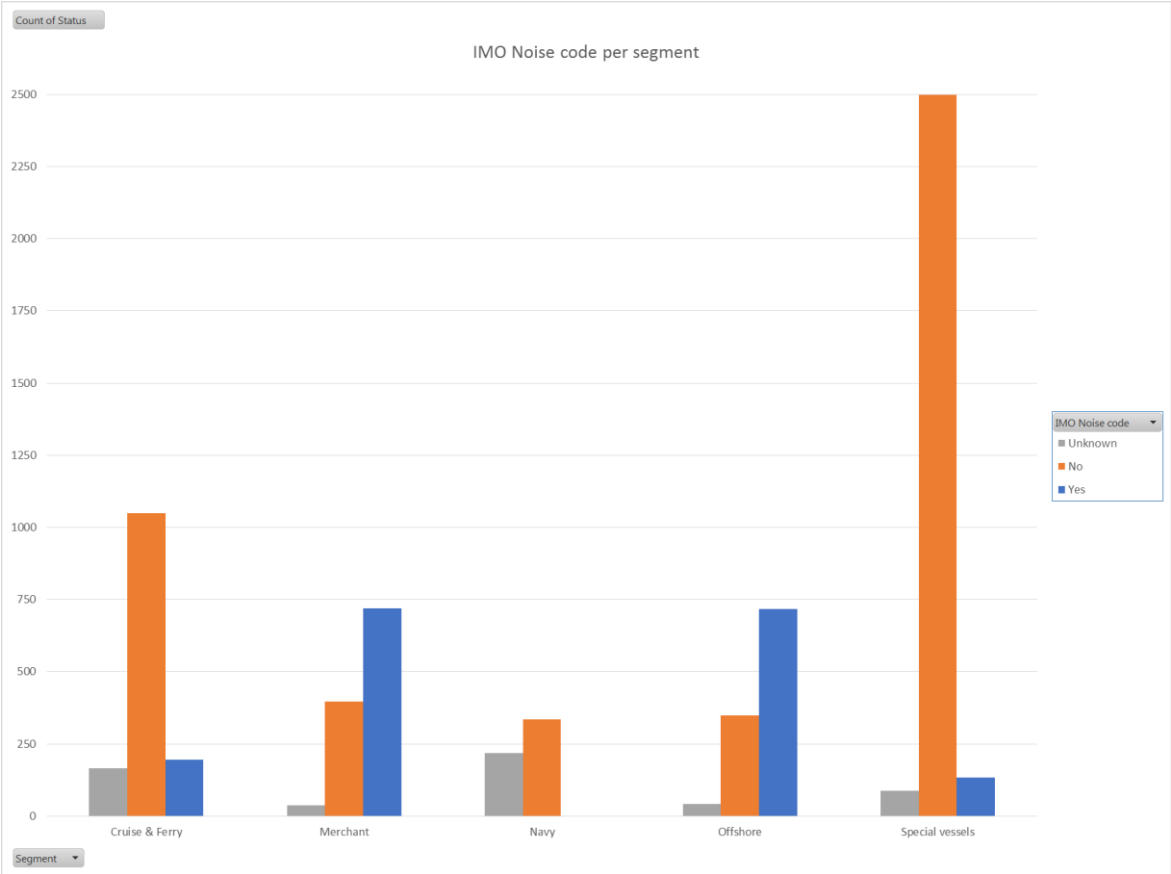

Figure 15. Bar chart showing the amount of vessels falling within IMO Noise Code parameters for each segment.

The segment making out the largest portion is also were the least amount of vessels needing to apply to the noise code is. This is mainly due to the size of the vessels, special vessels is the segment with the largest amount of small vessels, but also due to some of the vessels within the segment not having to apply to the code. Within the navy segment there is also few vessels needing to apply to the code, due to the fact that it does not apply to ships of war and troopships. Within the offshore and merchant segments, almost an equal amount of vessels needs to comply with the code, roughly 700 vessels.

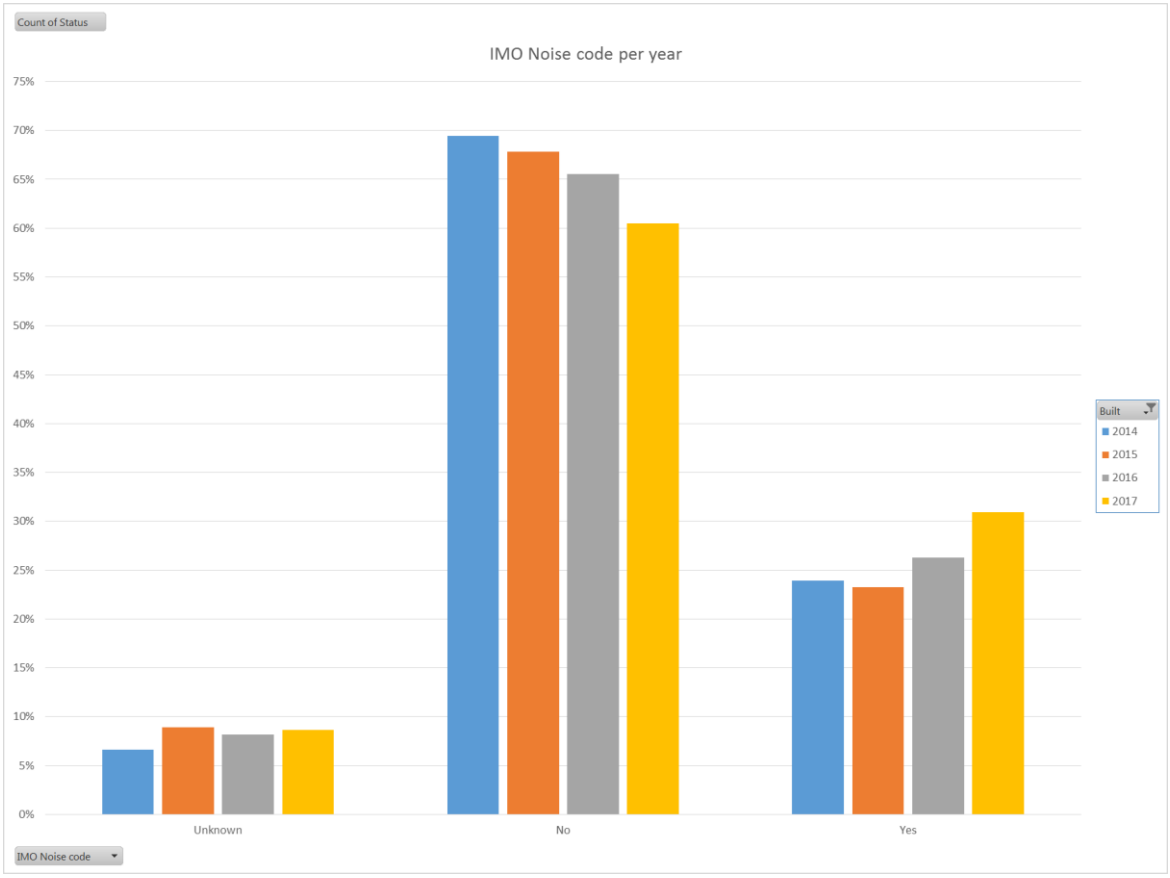

Figure 16. Bar chart showing the percental change in noise code applicable vessels over the years.

The change over the years was chosen to be presented as a percental change, as the amount of vessels built each year varies it gives a better picture. The percentage of vessels with unknown gross tonnage remains within a 5 – 10% range for all the years. The trend seems to be an increase of vessels required to apply to the noise code being constructed.

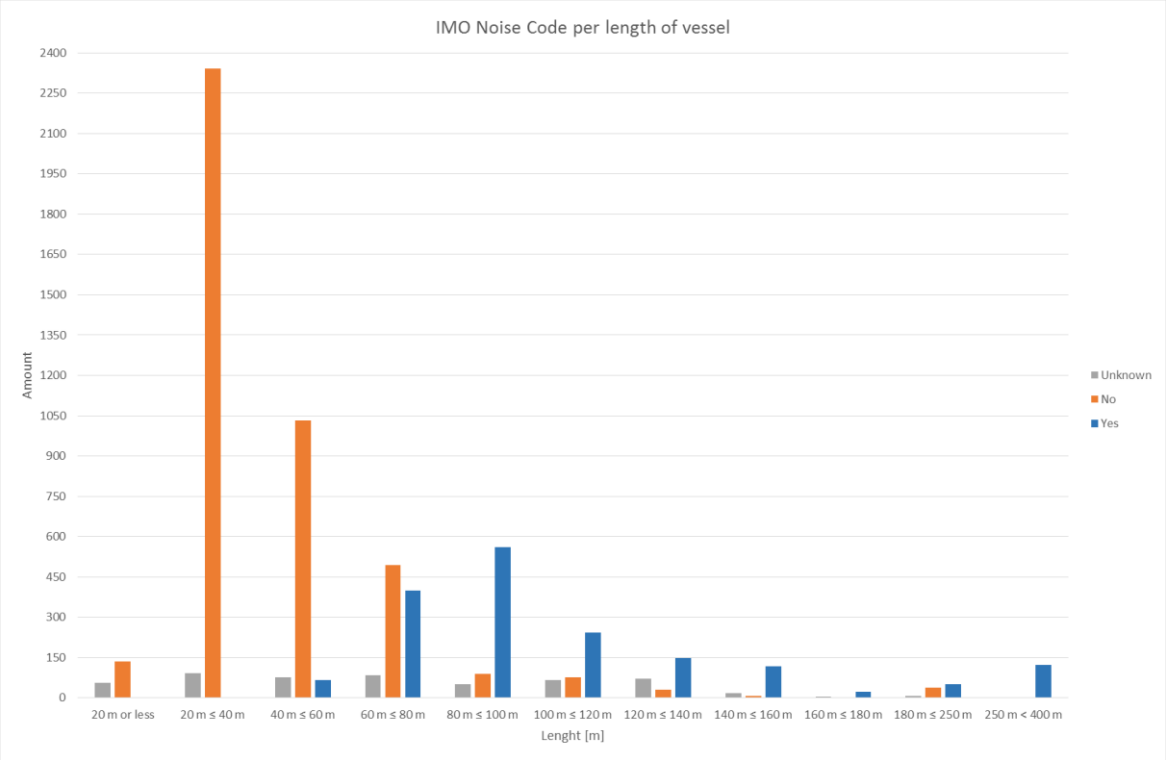

Figure 17. Bar chart showing the amount of vessels compliant to the noise code per length.

The largest amount of vessels compliant to the noise code is within a range of 80 to 100 meters. None of the vessels sampled shorter than 40 meters fall under the noise code, while the majority of vessels above 80 meters are compliant.

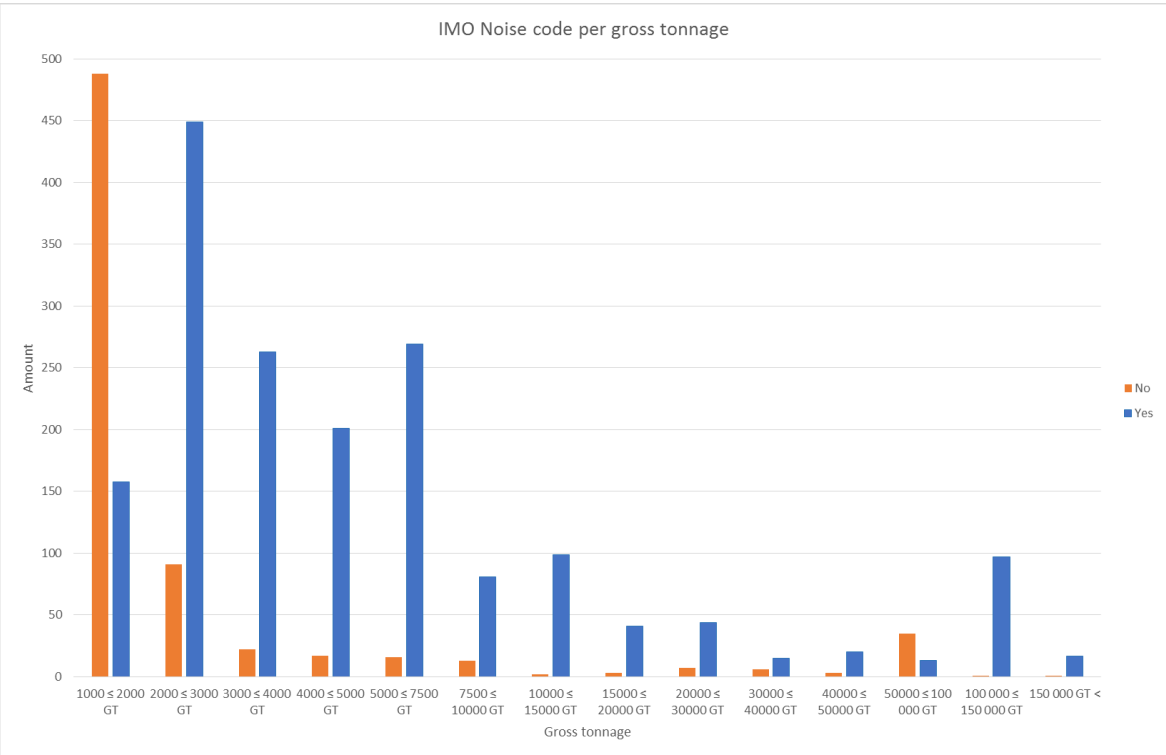

Figure 18. Bar chart showing the amount of vessels compliant to the noise code per GT.

Vessels below a gross tonnage of 1000, 3923 vessels, none falling under the noise code, were not included in the chart due to the large amount making the chart hard to read. As the gross tonnage goes above 1600, the weight were the code start to apply, the significant majority of the vessels are compliant with the noise code.

Lastly, the power type and noise code correlation were checked, a bar chart was created.

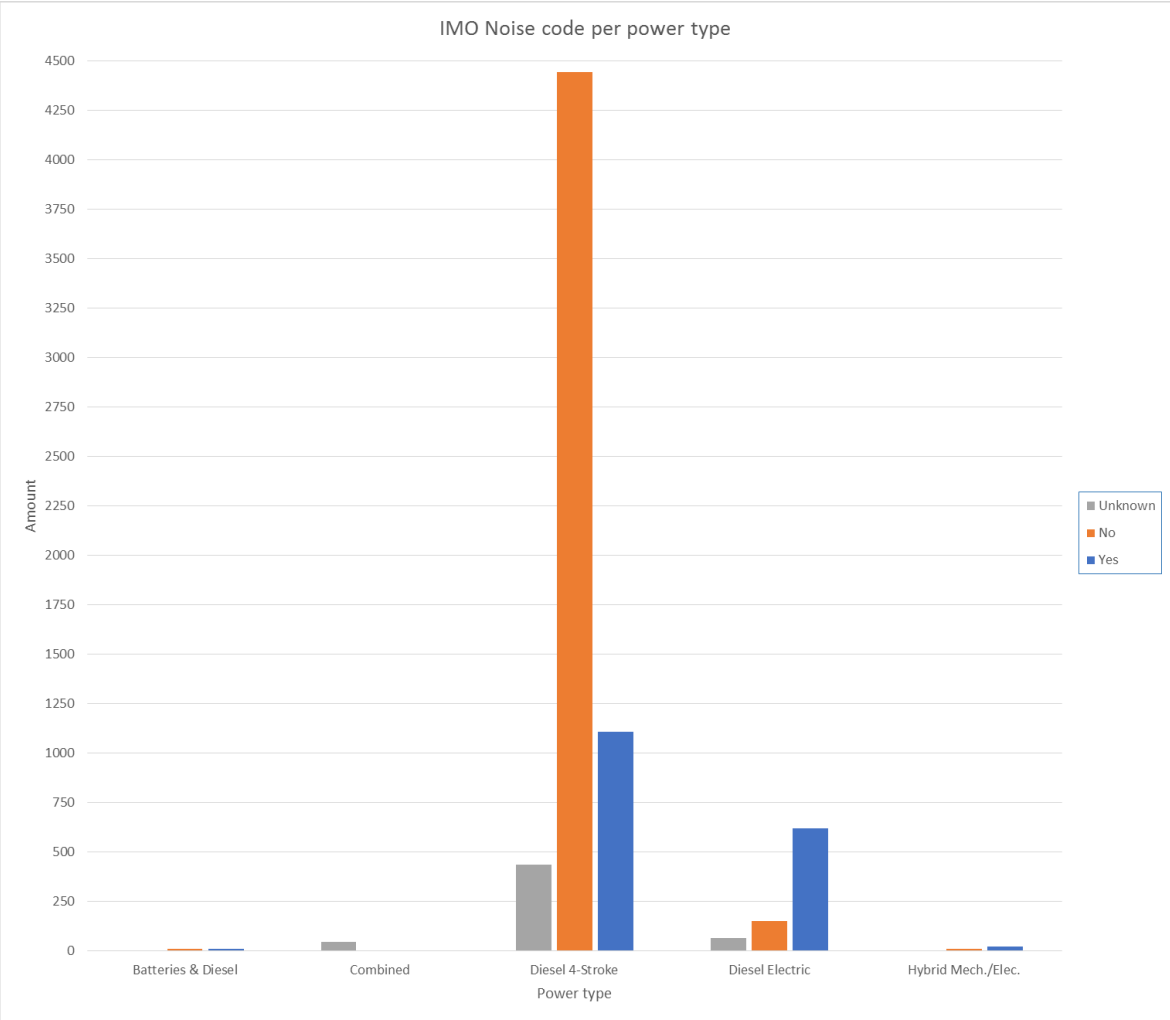

Figure 19. Bar chart showing the amount of vessels compliant to the noise code per power type.

The most common power type is a diesel 4-stroke main engine, followed by diesel electric, commonly referred to generator set or genset.

To get an idea of for which engine sizes the demand for an advanced self-aligning mounting system would be highest, the sample was limited to the four largest engine manufacturers, excluding Yanmar and Cummins Inc. They were excluded due to their product range that mostly consists of lower power output engines. The manufacturers included were, Caterpillar, MTU, Wärtsilä, and MAN Diesel & Turbo. The engine types

were grouped together based on their power output ranges (i.e. Wärtsilä 31, 4,2 MW to 9.8 MW). A bar chart showing the amount of vessels within each engine power range falling under the IMO Noise Code was created.

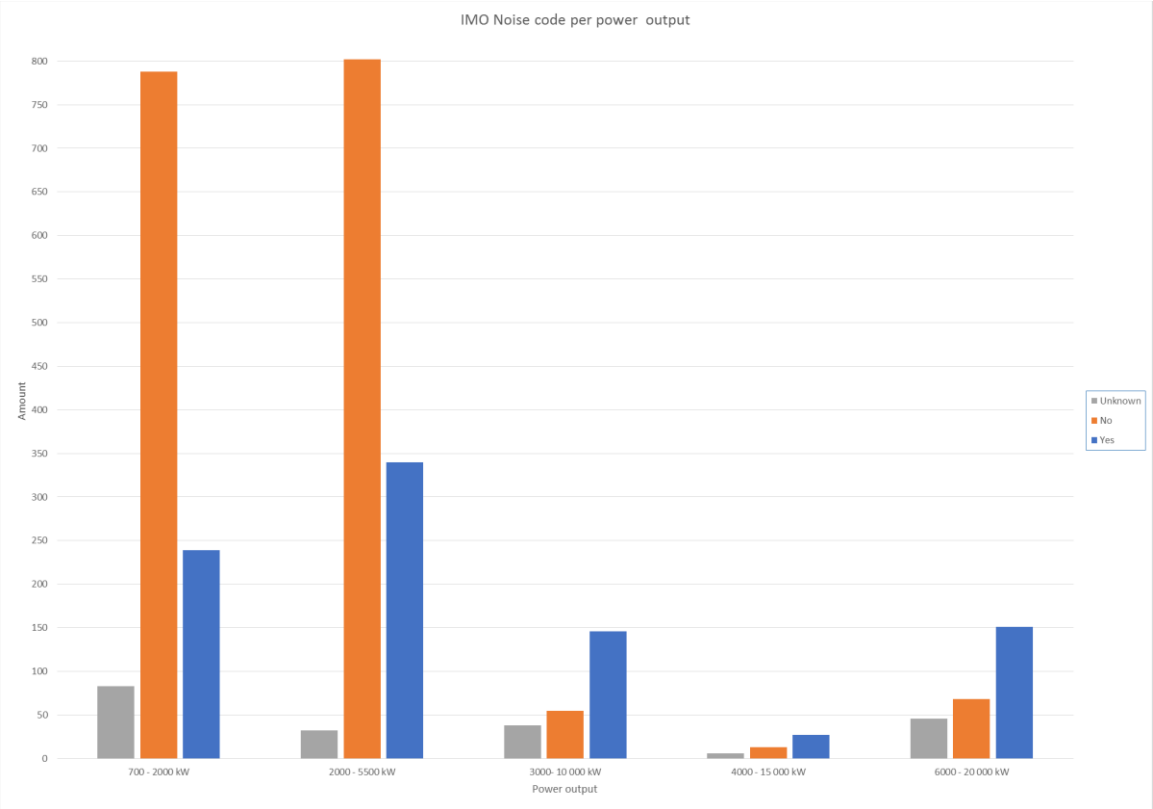

Figure 20. Bar chart showing the amount of vessels compliant to the noise code per engine power output.

The power range 2000 – 5500 kW is where the largest amount of vessels compliant to the noise code is found, followed by the 700 – 2000 kW range. This would in Wärtsilä terms mean the Wärtsilä 26 and 20 engines. Looking at the percentage, the 3000 – 10 000 kW range would be the largest. When all other manufacturers are filtered out and only Wärtsilä engines are taken into account, the results are quite different.

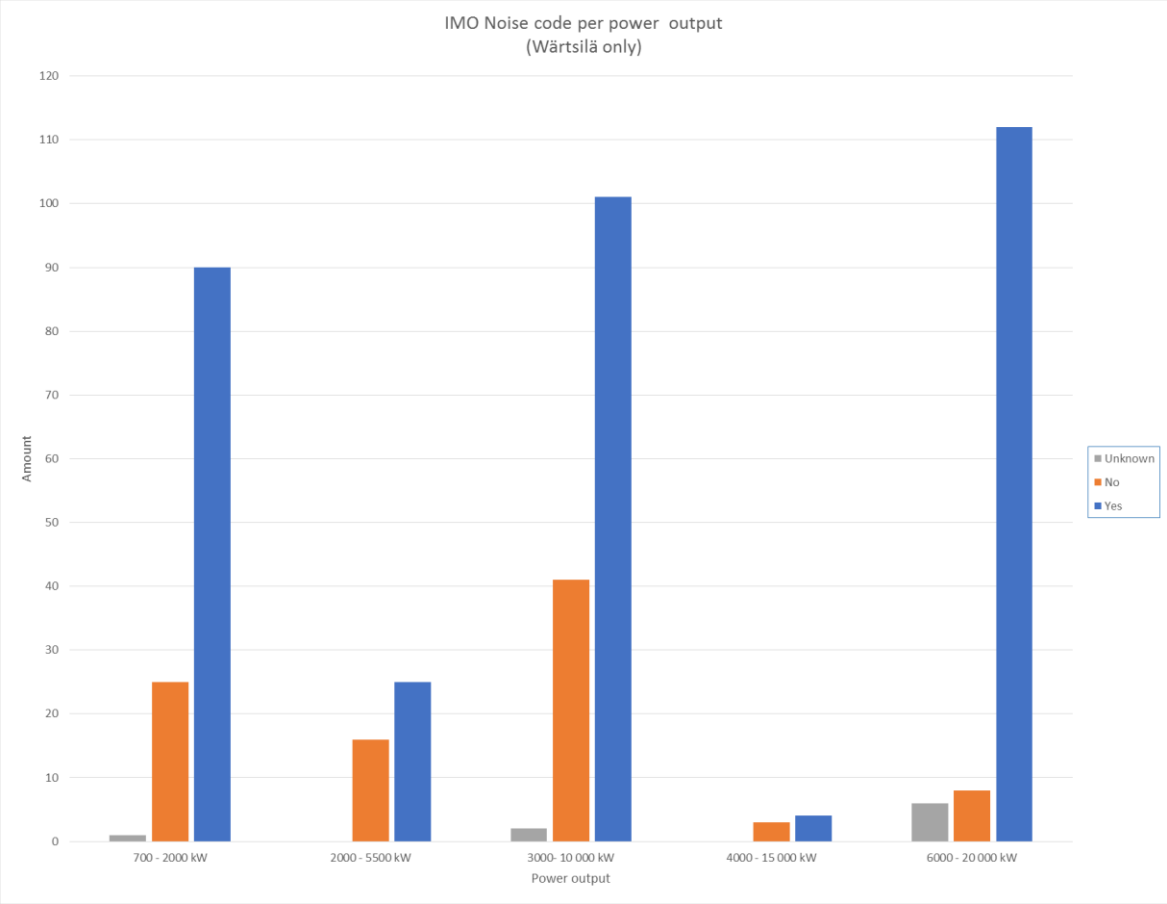

Figure 21. Bar chart showing the amount of vessels with Wärtsilä engines compliant to the noise code per engine power output.

The 6000 – 20 000 kW range being the largest with 112 vessels complaint to the noise code, closely followed by the 3000 – 10 000 kW range with 101 vessels. The power range for 700 – 2000 kW engines is not far behind with 90 vessels.

For estimating the maximum potential amount of engines that could be delivered with an advanced self-aligning mounting system, a chart with the amount of vessels built each year using Wärtsilä engines was created. The chart includes vessels needing to comply with the IMO Noise Code, but also vessels not needing to comply that could see benefits of the system, such as yachts and submarines.

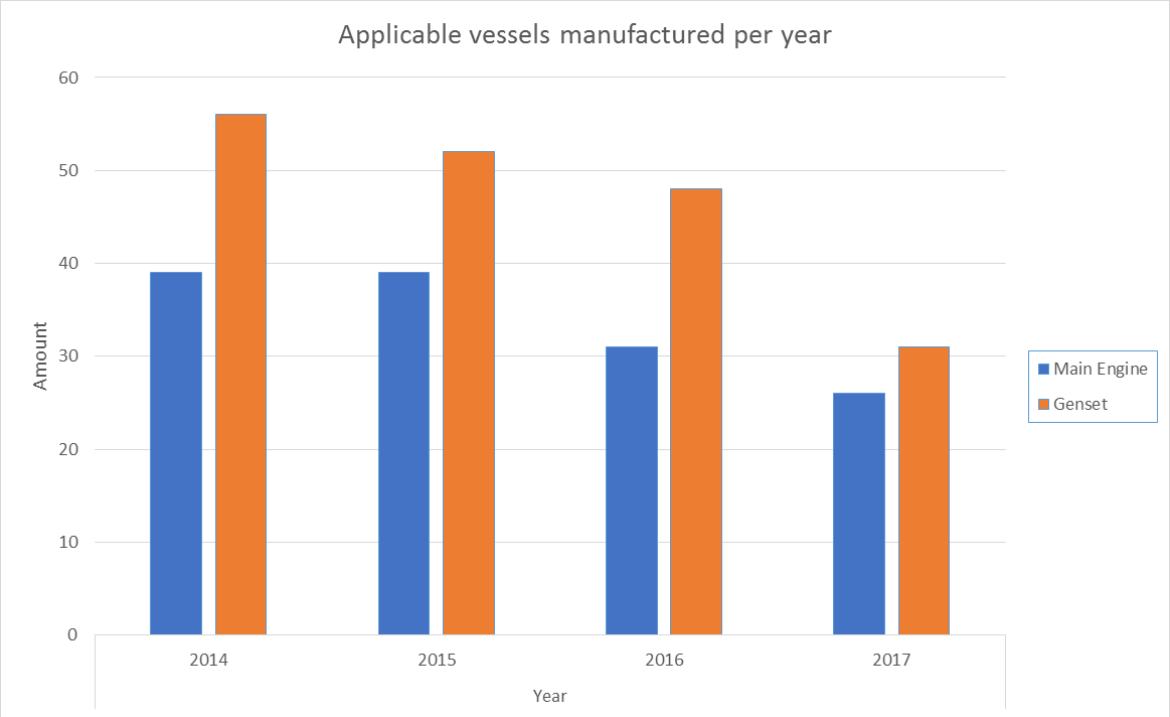

Figure 22. Bar chart showing the potential amount of vessels per year that could use the system.

Based on the number of vessels built each year one can estimate that about 25-40 vessels a year could potentially use a main engine while 30-60 vessels could see use of an genset solution.

The market research shows that the need to comply with the IMO Noise Code is present, and likely increasing. With larger vessels being the ones in most need, and power types mostly being main engines and gensets. Hybrid technologies make up a negligible part of the sampled vessels, but should not be dismissed, as the market will likely move towards these solutions as emission requirements increase. For engine sizes, low and medium power outputs are the main groups while the higher power outputs have a higher percentage of overall vessels compliant to the IMO Noise Code.

4.2 Results of the concept generation

Three advanced self-aligning mounting system concepts were created, one for an 8V31 main engine, one for a 10V31 generator set, and one double resiliently mounted 8V31 generator set. The mapped out functionality and requirements were considered, along with input from the bellow supplier and input from the team in Wärtsilä.

4.2.1 Wärtsilä 31 Main engine concept

The engine chosen for this concept was the Wärtsilä 8V31, presented in chapter 1.5.1. The approach was similar to previously designed flexible mounting systems, with the main difference from previous designs being the incorporation of transversal mounts. The systems includes an engine fixing rail, bellows with bead rings, limiters, and lower fixing rails.

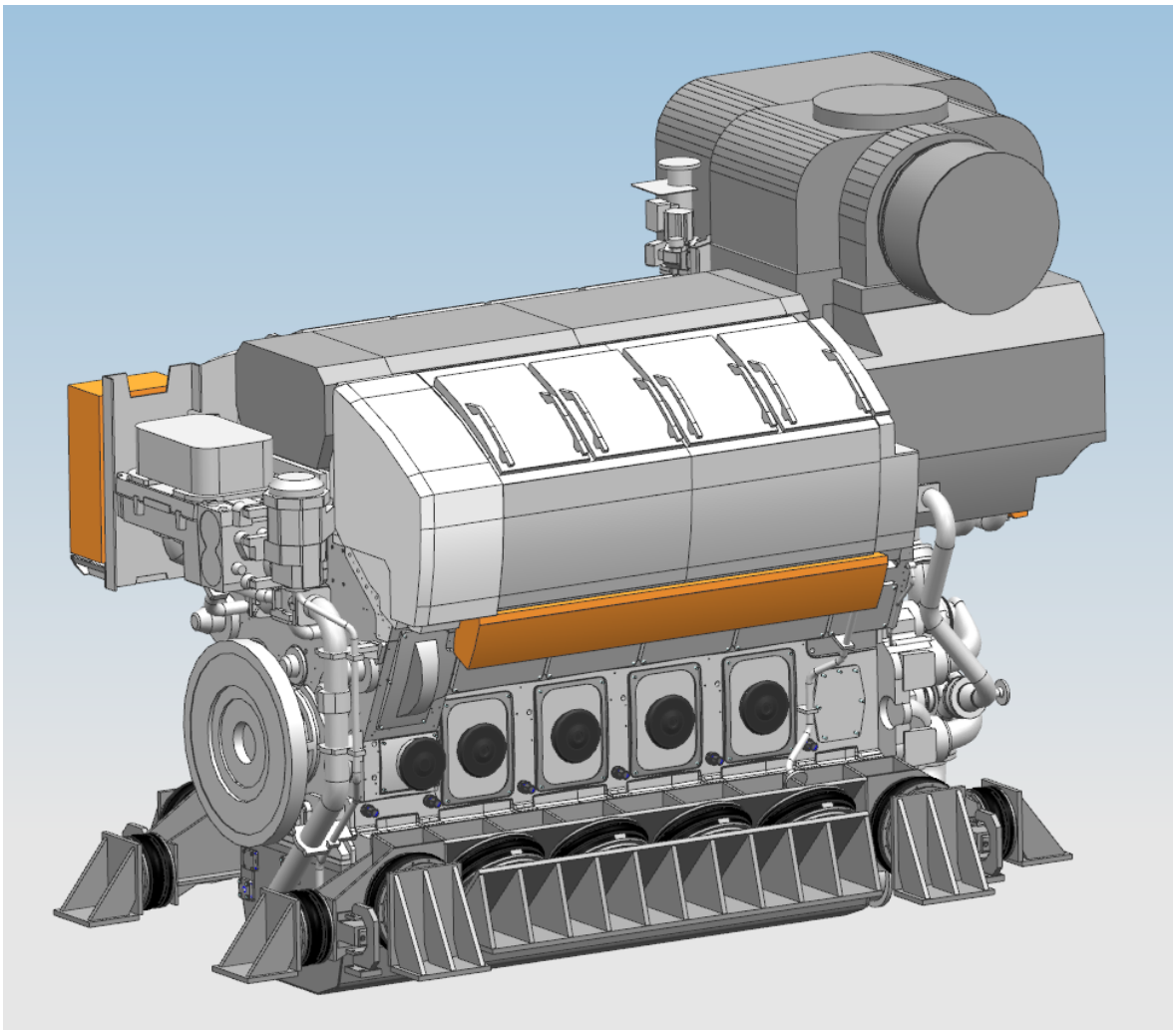

Figure 23. Main engine advanced self-aligning mounting system concept.

Four lifting bellows per side are mounted to the engine in a 90-degree fashion, with two stabilizing transversal bellows on each side. For control of movement lengthwise, two

bellows on each end of the engine are mounted. Limiters are placed on each side of the engine at the end of the fixing rails.

4.2.2 Wärtsilä 31 Genset concept

For the genset concept, an existing preliminary genset design for a Wärtsilä 10V31, presented in chapter 1.5.2, using an ABB AMG 0900LS08 LSE generator was chosen. This system includes a modified common base frame, bellows, limiters, and lower fixing rails.

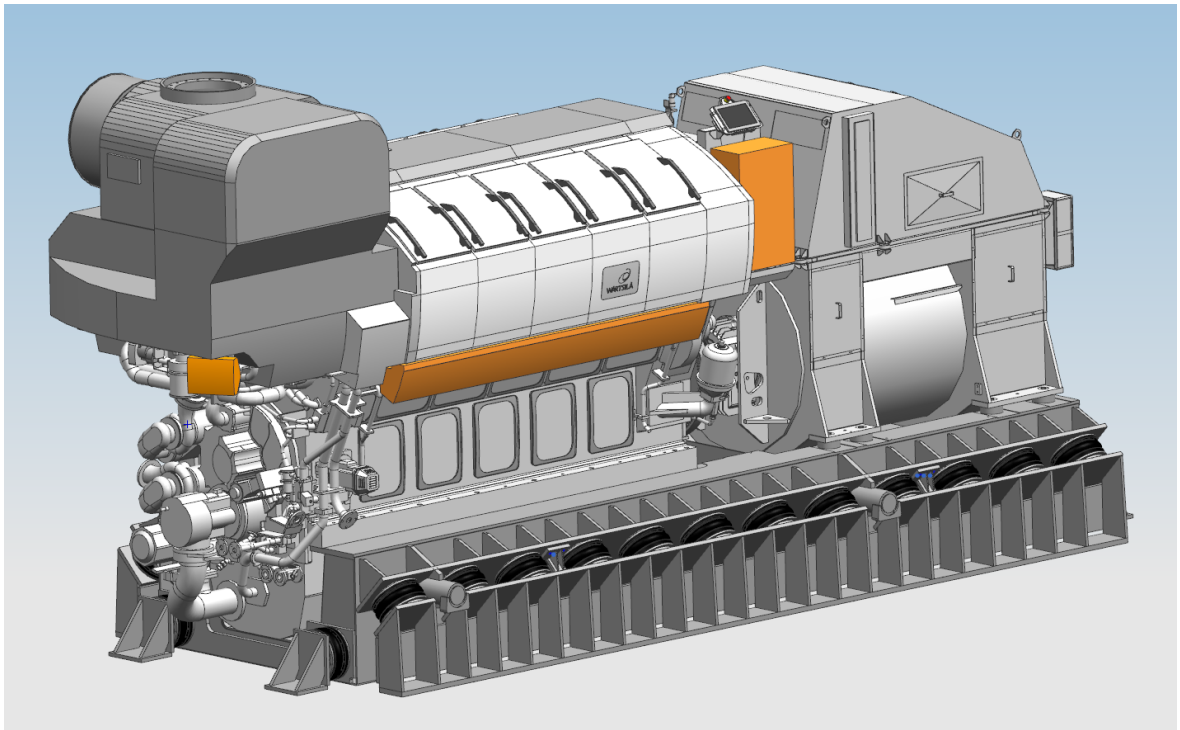

Figure 24. Genset advanced self-aligning mounting system concept.

The lifting bellow, twelve per side, are mounted in a 45-degree fashion on the side rails of the base frame. Six transversal bellows per side are mounted bellow the lifting bellows, between the base frame and the fixing rail (pictured below). Two bellows in each end of the common base frame provide control for lengthwise movement. Limiters are mounted between the side rails and fixing rails.

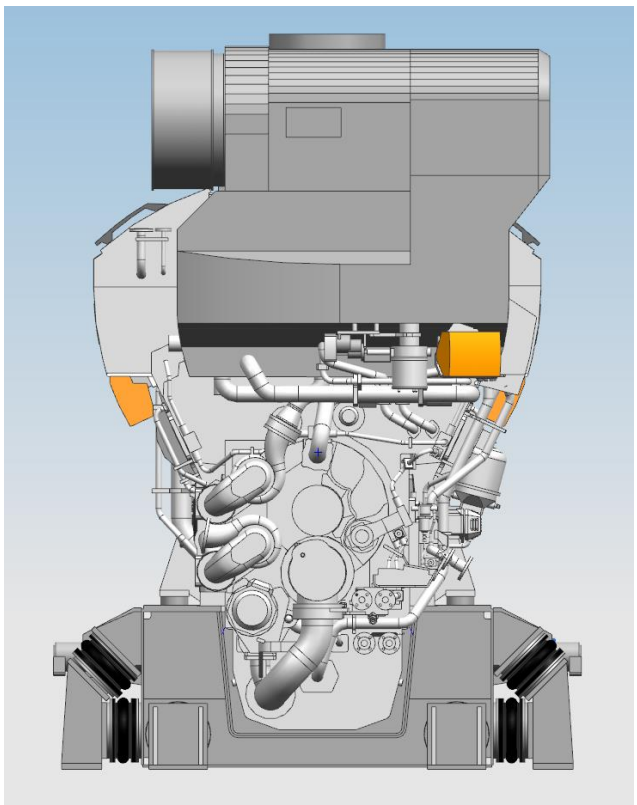

Figure 25. The genset concept pictured from the free end of the engine.

4.2.3 Wärtsilä 31 Double resilient genset concept with advanced self-aligning mounting system

The double resiliently mounted genset concept uses the mounting system for the main engine mounted on a heavier, more complex, common base frame. The common base frame is mounted to the vessel foundation with rubber mounts.

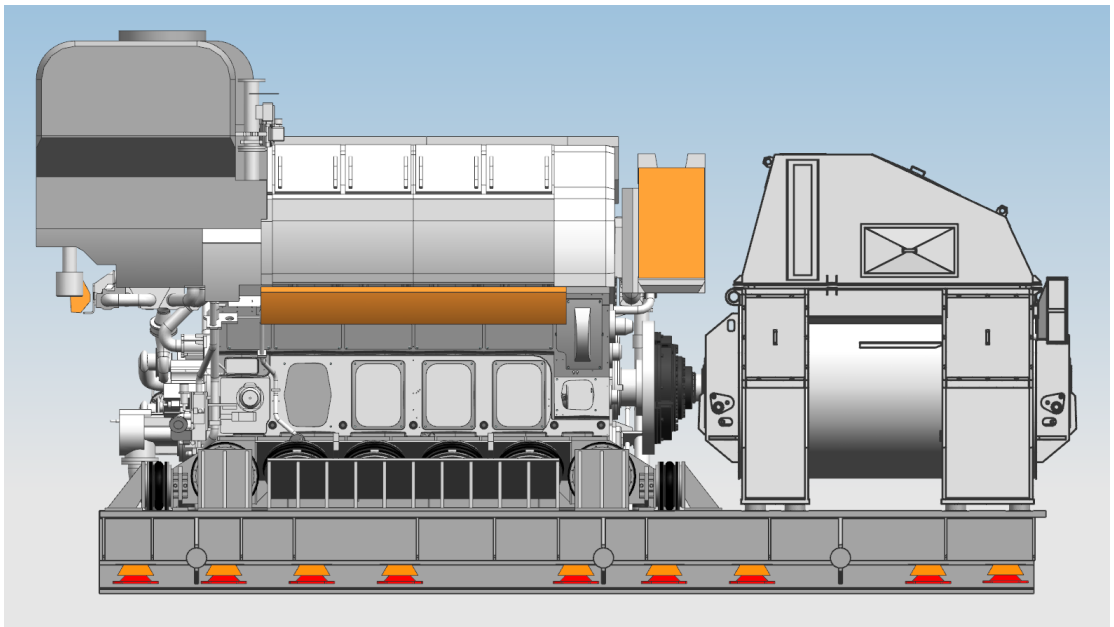

Figure 26. Double resilient genset concept with the advanced self-aligning mounting system.

5 Conclusion

When looking at the results from the perspective of the outlined problem definition and goals, I would say they have been met. The market research has provided insight into which type of vessels, both from a segment point of view, and looked from the vessel sizes, could have use from an advanced self-aligning mounting system. The research also provide a picture for which engine sizes it would be beneficial to continue developing the mounting system. Although the IMO Noise code is by no means any definitive measure of where the system could see use, it is a good, and easily identifiable, indicator of where noise isolation is needed.

If the benefits can be achieved, such as limiting the structure borne noise to a level where isolation material can be reduced, the system might prove to be cost-beneficial. However, in order to claim this, further development and above all, testing, of the system is needed.

In order for that to happen, the concepts need to be developed into detailed designs for manufacturing.

The work on this thesis has been very challenging. The scope has changed somewhat during the process, and it has introduced me to market research, which is something I was very unfamiliar with before conducting the thesis. The process has been quite educational and the many different aspects have provided a great deal of insight into new areas.

6 List of sources

Block, M. P. & Block, T. S., 2005. *Business-to-Business Marketing Research.* 2nd ed. Mason: Texere.

Clarksons Research, 2018. *World Fleet Register.* [Online]
Available at: https://www.clarksons.net/wfr2/fleet
[Accessed 23 1 2018].

Clarksons, 2018. *Clarksons - About us.* [Online]
Available at: https://www.clarksons.com/about-us/
[Accessed 23 1 2018].

DNV GL AS, 2016. *Rules for classification of ships, Part 4, Chapter 1,* s.l.: DNV GL AS.

Flodhammar, Å., Bäckamn, B., Lundgren, S. & Nielsen, T., 1991. *Industriell marknadsföring.* 2:1 ed. Malmö: Liber Ekonomi.

IMO - International Maritime Organization, 2012. *Code on noise levels on board ships.* [Online]
Available at:
http://www.imo.org/en/KnowledgeCentre/IndexofIMOResolutions/Documents/MSC%20-%20Maritime%20Safety/337(91).pdf
[Accessed 27 10 2017].

Johannesson, H., Persson, J.-G. & Petterson, D., 2013. Produktutveckling - Effektiva metoder för kontruktion och design . In: Stockholm: Liber, pp. 119-122.

Långbacka, F., 2012. *Mechanical design of advanced self-aligning mounting system,* Vaasa: Novia University of Applied Sciences, Mechanical and Production Engineering.

McGill Qualitative Health Research Group, n.d. *McGill Qualitative Health Research Group.* [Online]
Available at: https://www.mcgill.ca/mqhrg/resources/what-difference-between-qualitative-and-quantitative-research
[Accessed 9 January 2018].

Pettersen, Ø. S., 2017. *A Study of Radiated Noise From Fishing Vessels,* Trondheim: Norwegian University of Science and Technology.

Wärtsilä Finland Oy, 2017. *Wärtsilä 31 Product Guide,* s.l.: Wärtsilä Finland Oy.

Wärtsilä Marine Solutions, 2013. *Marine Market Segments - PowerPoint presentation for internal use desciribing the market segments,* s.l.: Wärtsilä Oy.

Wärtsilä, 2018. *Wärtsilä Generating Sets.* [Online]
Available at: https://www.wartsila.com/products/marine-oil-gas/engines-generating-sets/generating-sets/wartsila-genset-20
[Accessed 23 February 2018].

Wasberg, A., 2011. *Advanced self-aligning mounting system,* Vaasa: Novia University of Applied Sciences, Mechanical and Production Engineering.

Widner, S., 2013. *Mechanical design of an advanced self-aligning mounting system,* Vaasa: Novia University of Applied Sciences, Mechanical and Production Engineering.