LUJA-SUPERLAATTA: PRODUCT DEFINITION AND STUDY OF THE MODELING PROCESS, METHODS, AND COMPATIBLE MODELING TOOLS IN TEKLA STRUCTURES

HAMK
HÄMEEN AMMATTIKORKEAKOULU
HÄME UNIVERSITY OF APPLIED SCIENCES

Bachelor's thesis

Hämeenlinna, Degree Programme in Construction Engineering

Spring 2019

Ilia Chichkanov

HAMK
HÄMEEN AMMATTIKORKEAKOULU
HÄME UNIVERSITY OF APPLIED SCIENCES

ABSTRACT

Degree Programme in Construction Engineering
Hämeenlinna

Author	Ilia Chichkanov	Year 2019
Subject	Luja-Superlaatta: product definition and study of the modeling process, methods, and compatible modeling tools in Tekla Structures	
Supervisors	Aleksi Pöyhönen, Samu Mäkelä, Cristina Tirteu	

ABSTRACT

This bachelor's thesis was commissioned by Pöyry Finland Oy and Lujabetoni Oy.

The purpose of the thesis was to study and describe the new product on the Finnish market called Luja-Superlaatta, which is a prefabricated prestressed concrete slab. Another aim was to test and analyze its modeling capabilities in the Tekla Structures BIM (Building Information Modeling) software. One of the goals was also to collect and systemize the data that may be used by structural designers not acquainted with the product and its design. Some information presented further is based on the discussions with the manufacturer of the product and sources in Finnish. Therefore, this thesis may be used as a main reference for English-speaking specialists, too.

The thesis consists of three main chapters. The first chapter is focused on the theoretical background of reinforced concrete slabs. The provided information may be used as a basic knowledge reference for further chapters. The second chapter defines Luja-Superlaatta and its design features and regulations. In the last chapter, the modeling method obtained during the study is described, certain errors and flaws are presented, and several compatible modeling tools and hints are listed. In the end, a small summary about possible improvements is added. In the appendices, some useful information including the approved examples of required structural drawings is provided.

Keywords Reinforced concrete slabs, Luja-Superlaatta, The SL-Deck, LECA-blocks, Tekla Structures, BIM

Pages 115 pages + appendices 21 pages

ACKNOWLEDGEMENTS

First of all, I would like to state that I truly appreciate the provided possibility to study a new product and be a part of its promotion in Finland. I gained a lot of new knowledge while writing this thesis and not only about the structural design. Hopefully, the information and results presented below fully satisfy the expectations of all my supervisors.

I would like to give my special thanks to Aleksi Pöyhönen, my supervisor from Pöyry Finland Oy, who was always pleasant to answer my questions and guided me through most aspects.

I am very thankful to my supervisor from Lujabetoni Oy, Samu Mäkelä, who approved and completed the idea of this thesis and consulted me with issues related to Luja-Superlaatta.

I am also very happy to have Cristina Tirteu as a supervisor from HAMK UAS. She was always ready to help and guide me through questions related to the thesis content, university, and graduation.

My special thanks go to Daria Liutina, the structural designer of Luja-Superlaatta slabs in Lujabetoni Oy. She spent a lot of time helping me with the data collection and tests of modeling tools and methods.

Also, I would like to thank my mother for the advices and sharing her experience of thesis writing with me as well as the help with some English grammar issues.

Finally, I would like to state my gratitude to my highly-experienced colleagues at Pöyry Finland Oy, Kari Lomperi, Klaus Ganszauge, Teemu Ahonen, and Keijo Jylhä, which have partly contributed into this thesis by consulting me.

P.S. I also would like to give my thanks to Polina Kozlova, which implicitly provided me with her laptop for the time I wrote the thesis.

CONTENTS

1 INTRODUCTION

Slabs are significant components in most structures, such as buildings or bridges. At this moment, a certain concrete slab may be serving, for example, as the floor of the reader's room, walkway pavement outside his window, or a deck in the bridge on his way between home and office. Definitely, the world is such today. However, it was not the same only 100 years ago.

Dating from the construction of the first concrete buildings at the end of the nineteenth century, reinforced concrete structures started to spread all over the world, and they have been most widely used in the construction industry until the present. Reinforced concrete technologies have traced a long way of evolution during that period. Many design and construction methods have been developed, new building structures and elements have been invented and improved, normative documents and standards have been set, merged, and systemized.

However, not only the design and construction methods have been evolved. The way of working has also been changing with the time. Thus, back into a few decades ago, engineers were doing all calculations and producing drawings by using only a sheet of paper and a pencil. Nowadays, we have all sorts of computer applications, which make possible to quickly perform any of those complicated operations just by a few clicks of a mouse.

The progress will not stop in one place, and, thanks to the human mind, there is always something new and interesting to study and understand. In our case, such a novelty is the Luja-Superlaatta slab that requires a small investigation in the field of BIM-technologies.

2 REINFORCED CONCRETE SLABS

In order to distinguish, classify, and comprehensively study the new product called in Finland Luja-Superlaatta, which itself is a prestressed concrete slab, the theoretical background of reinforced concrete (RC) slabs is briefly analyzed and systemized in this chapter. First, basic concrete structures are considered. Then, various slab types are defined. Finally, typical slab details and the most common modeling tools in the Tekla Structures program are described.

2.1 Reinforced concrete structures

The aim of this section is to shortly outline general functions and features of typical concrete structures. Such aspects as the building structure, reinforced concrete, prestressed concrete, and construction methods are studied throughout this section.

2.1.1 Building structure

Building - a structure consisting of a roof and walls temporary or permanently fixed in one place. The building may serve for a number of needs and may be adopted for various conditions. It may be made of different sizes and shapes and usually is divided by floors into storeys. If a building has more than one storey, it is called a multi-storey building.

A typical building structure may include such basic elements as follows (Bhatt, MacGinley, & Choo, 2014, p. 1):

- Foundations – concrete pads or strips, which spread loads from vertical elements, such as columns or walls, to the ground. Foundations supported on piles are called bases.
- Columns – vertical elements carrying mainly axial loads, but generally subjected to combined axial load and moment.
- Walls – vertical plate elements carrying vertical, lateral, or in-plane loads. Columns and walls support horizontal elements, such as beams and slabs.
- Beams – horizontal elements carrying lateral loads. They are mostly used to reinforce or support slabs.
- Slabs – horizontal plate elements carrying lateral loads. Slabs are used to collect loads from rooms above them and transfer the loads to their supports. Slabs may be ground-bearing or suspended. A slab is ground-bearing if it rests on the ground or foundation, otherwise it is suspended.

2.1.2 Reinforced concrete

Nowadays, one of the standard building materials used for most structures is reinforced concrete that works perfectly both in tension and compression. It is a composite material which normally consists of steel reinforcing bars, also called rebars, and a concrete matrix. The reinforcing schemes are mostly installed to resist tensile stresses, while the concrete resists compressive stresses.

(i) Rebars

A typical rebar is a hot-rolled round rod made of carbon steel with crest-shaped deformation patterns along its length helping concrete to stick onto the rod. It may be coated in an epoxy resin to prevent the corrosion of steel, especially in saltwater environments and land-based constructions. Recently, variable reinforcing materials made of steel, polymers, or similar composite materials are added into concrete or even replace rebars. For instance, in steel fiber reinforced concrete (FRC) slabs, the number of rebars may be reduced due to the increased strength of concrete mixed with steel fibers.

Figure 1. Steel rebars (Accu-cut concrete cutting and breaking, n.d.)

(ii) Concrete

Concrete is a mixture of water, fine and coarse aggregates, and cement, which acts as a binder. The reaction of water and cement, called hydration, allows the mixture for hardening during the drying process into a rigid and highly resistant to compression concrete matrix tightly bonded to rebars.

One variation of the concrete mixtures is a self-compacting concrete (SCC). It is a flowing concrete that does not require vibration, while it is cast. In comparison with the ordinary concrete mix, the SCC achieves compaction into every part of the mold or formwork by means of its own

weight without any segregation of coarse aggregates. This type of concrete is used in Luja-Superlaatta. (The Concrete Centre, n.d.)

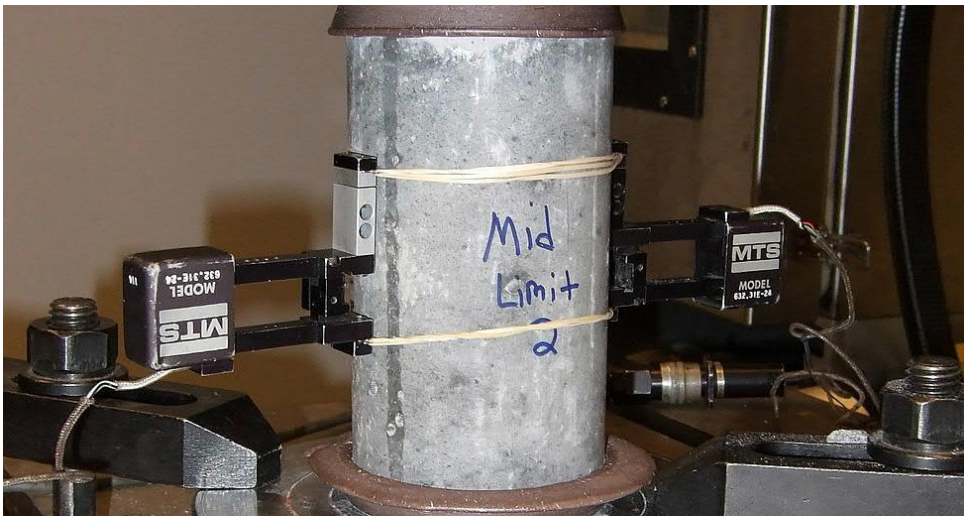

Figure 2. Compression testing of the concrete cylinder (Howling Pixel, n.d.)

(iii) Advantages and disadvantages

Despite some disadvantages, reinforced concrete is the most common building material in the world. Concrete, particularly, is the second most consumed substance in the world after water. On average, each year, three tons of concrete are consumed by every person on the planet (Rubenstein, 2012). The reason for such a tremendous consumption underlies in the collaboration of cheap raw materials and appropriate characteristics of reinforced concrete.

Advantages of reinforced concrete as a building material:
- High tensile and compressive strength
- Durability
- Mouldability
- Versatility
- Cheapness
- High fire resistance
- Moisture impermeability
- Seismic resistance of reinforced concrete structures
- Easy transportation of cast-in-situ raw materials
- Recyclability

Disadvantages of reinforced concrete as a building material:
- Huge overall dimensions of concrete elements
- Heavy weight
- Natural deterioration
- Weakness to temperature changes
- Rebar rust

- Low sound-proofing
- Relatively complicated erection of concrete structures
- High carbon dioxide emissions during the manufacturing phase

2.1.3 Prestressed concrete

Concrete pre-stressing was invented in order to overcome the natural weakness of concrete subjected to tension. This method consists in intentional compression of a concrete unit by transferring pressure from special prestressed tendons, usually high-tensile steel cables or strands passing throughout the concrete. The tendons are stretched and then anchored maintaining the transfer of compression into the concrete. This action generates an offset of tensile stresses inside the unit structure. Thus, when the unit is subjected to loads, the previously stretched tendons, acting similarly as rebars, start to resist tensile stresses before the concrete. The pre-stressing greatly reduces or even eliminates concrete cracking, especially in cases when only design service loads are applied. Also, this technique reduces deflections and makes possible to increase unit spans. The process of pre-stressing may be completed in two ways: pre-tensioning and bonded or unbonded post-tensioning. (Ilveskoski, 2014, p. 143)

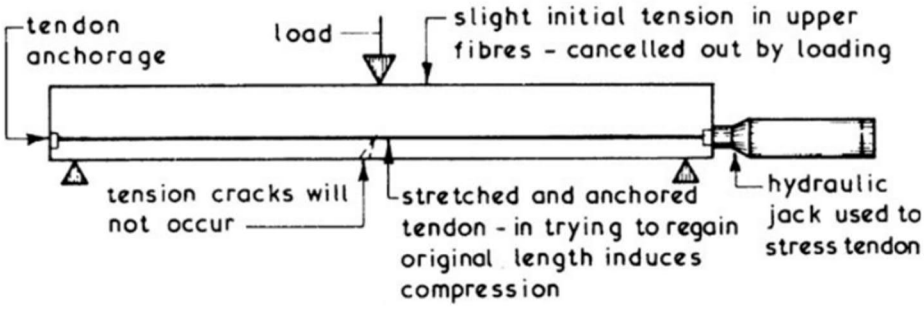

Figure 3. Prestressed concrete (Chudley & Greeno, 2014, p. 621)

(i) Pre-tensioning

Pre-tensioned structures are produced by pouring concrete around already tensioned tendons, which makes the tendons protected from corrosion and allows them for receiving loads directly from the concrete. Once the concrete is hardened enough, the tendons are slowly released from anchors and trimmed transferring compression. This method is mostly applied to precast elements since it requires fixed and reliable anchoring points, which are easier to install and maintain in a factory environment rather than on a construction site. (Ilveskoski, 2014, p. 143)

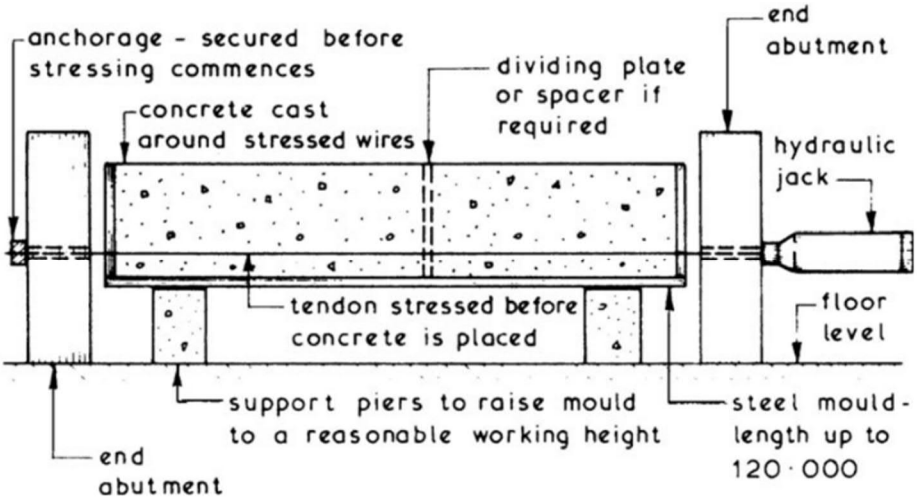

Figure 4. Typical pre-tensioning arrangement (Chudley & Greeno, 2014, p. 623)

(ii) Post-tensioning

Post-tensioning usually proceeds on a construction site and is applied to large structures, which cannot be transported in one piece. This method is widely used for cast-in-situ structures and consists in applying compression after concrete is poured and hardened. The reinforcement schemes of such structures include special curved metal or plastic ducts arranged along tension areas. When reinforcement is assembled, tendons are passed throughout the ducts and concrete is poured. After the concrete is sufficiently hardened, the tendons are tensioned with the use of hydraulic jacks and wedged at the ends of a structure compressing the concrete.

Post-tensioning may be bonded or unbonded depending on whether ducts are filled with a mortar grout or not. In bonded post-tensioning, grouting requires time and additional costs, but, on the other hand, it saves steel tendons from corrosion and makes a strong connection between the tendons and ducts enabling to receive loads directly from the concrete. In unbonded post-tensioning, the tendons remain detached from the ducts along their lengths and transfer loads only via the wedges at the ends. The tendons may be protected by the encasing within plastic or paper covers filled with corrosion-inhibiting and moisture-repellent greases. (Ilveskoski, 2014, p. 143)

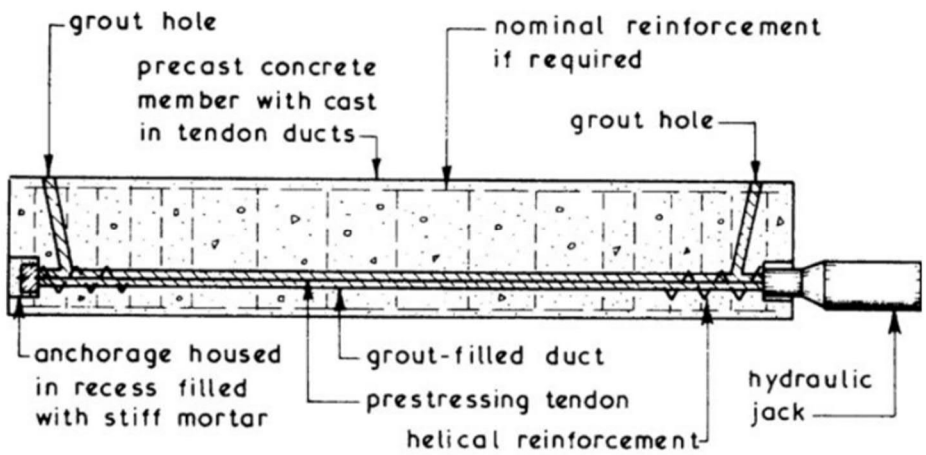

Figure 5. Typical post-tensioning arrangement (Chudley & Greeno, 2014, p. 624)

2.1.4 Construction methods

Reinforced concrete structures may be divided according to construction methods into four categories: cast-in-situ, precast, hybrid, and composite.

(i) Cast-in-situ

Cast-in-situ, or cast-in-place, means a concrete structure assembled directly in its permanent position. The reinforcement of cast-in-situ structures must be assembled and anchored before concrete is poured around it. To form right shapes, special formwork systems are used. In slabs, formwork often comprises more than a half of the total cost of construction.

In case of skyscrapers, concrete is delivered through pipes to the point of placement by using a pump. Concrete mixes for pumping must be carefully chosen to keep the delivering process efficient providing the required strength of structures. (Edgerton, 2015)

The advantage of the cast-in-situ method consists in easy transportation of materials, flexible in-situ shape forming, and economical assembling of small structures. The disadvantages are poor on-site quality control, issues related to weather and drying period, supplemental formwork costs.

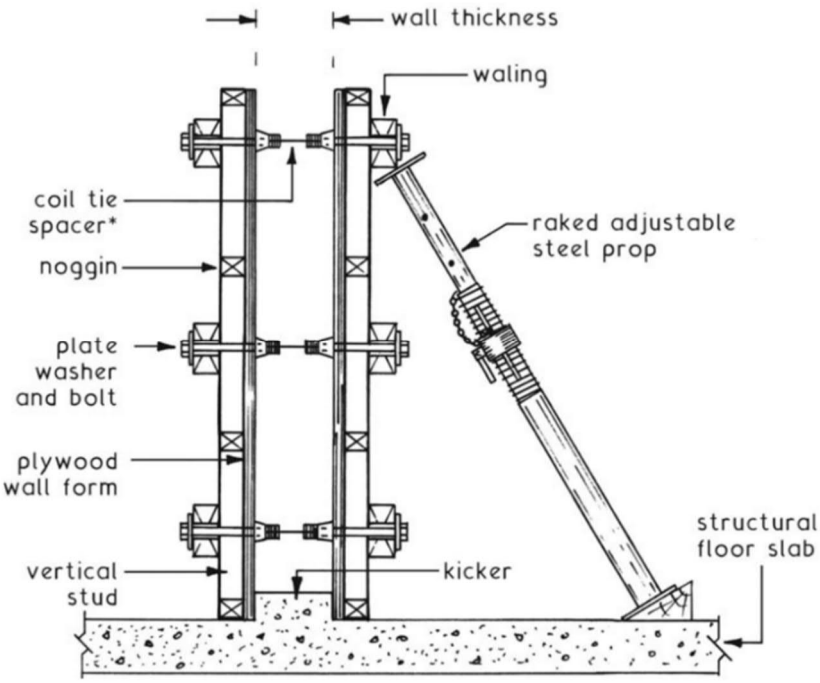

Figure 6. Wall formwork principles (Chudley & Greeno, 2014, p. 615)

(ii) Precast

Precast concrete elements are produced on factories under factory-controlled conditions. Then, fully hardened and ready-to-install, they are delivered to a construction site, lifted to the place of installation with a crane, and connected with the use of rebars or various steel embedded parts, such as anchor bolts, plates, angle bars, column shoes, and other. Joints between precast concrete elements are filled with site-poured concrete. Despite the quite fast assembling of low-rise precast concrete structures, construction of high-rise buildings becomes more challenging, long, and cost consuming.

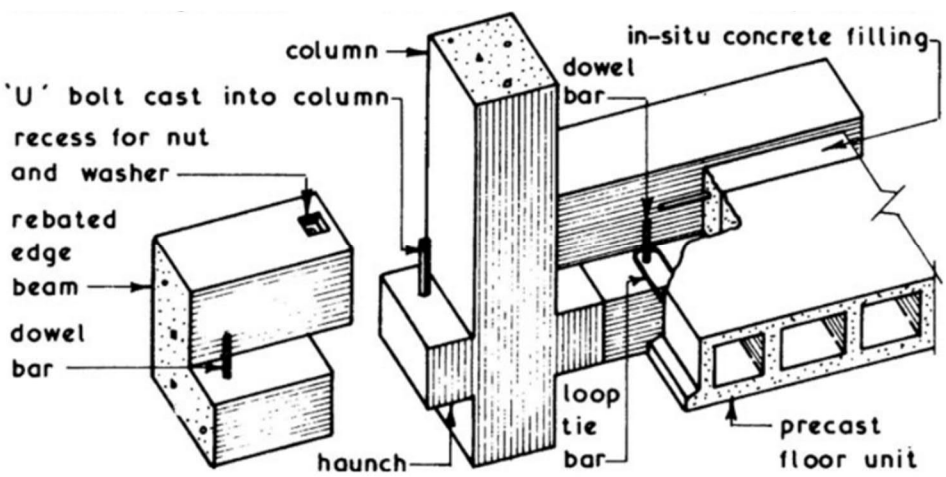

Figure 7. Typical details of precast beam-to-column connections (Chudley & Greeno, 2014, p. 620)

The advantages of the precast method are as follows: independence from weather conditions, factory-safe curing, high-levelled quality control, presence of strength tests, fast and economical assembling of large structures, possibility to develop complicated forms. The disadvantages are: transportation and installation limitations, need in the additional control of joints.

(iii) Hybrid

Hybrid concrete, also may be called semi-precast, is an intermediate category applied to structures consisting of precast and cast-in-situ parts. Hybrid structures were generally developed in order to combine advantages of precasting, such as speed, accuracy, pre-tensioning, and high quality, with advantages of the cast-in-situ method, such as flexibility, mouldability, and continuity of structures. For instance, filigree slabs may be constructed without the use of bottom formwork in the same way as precast slabs, while the structures of such slabs possess continuity in a similar manner as cast-in-situ slabs.

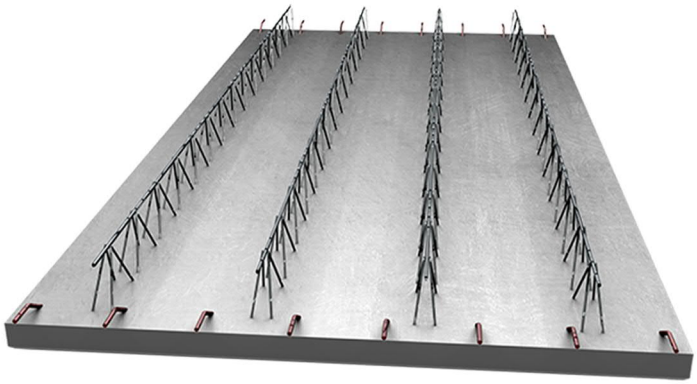

Figure 8. Filigree slab (Keegan Precast Ltd, n.d.)

(iv) Composite

Composite structures are made of different building materials, basically of steel sections and cast-in-situ concrete filling. The idea is quite similar to the hybrid category. Composite structures have certain benefits of both building materials. Thus, the steel decking in the bottom of a composite slab may act as formwork and carry tensile stresses at the same time. In a similar manner, composite beams, such as delta beams, are provided with hot rolled or fabricated steel sections that serve as formwork and reinforcement for the filling concrete.

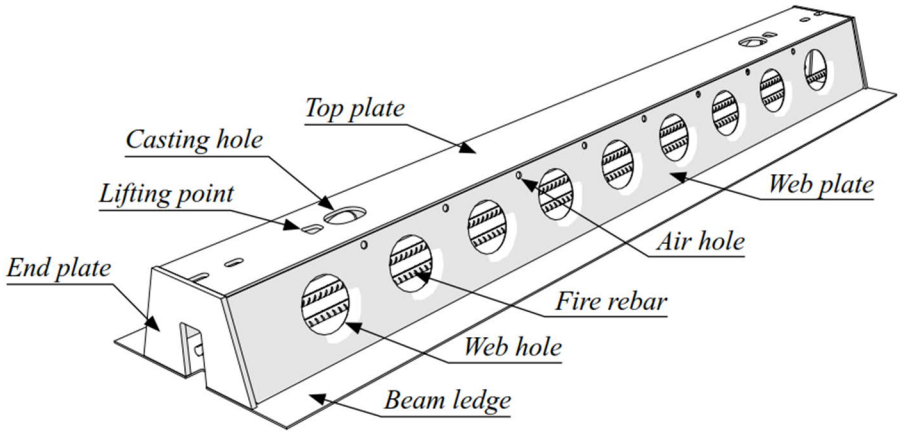

Figure 9. Peikko DELTABEAM (Peikko Group, 2017)

2.2 Types of suspended slabs

Suspended slabs may be simply supported, continuous spanning over several supports, or cantilever. Slabs supported directly on columns are called flat slabs. Furthermore, slabs may be spanning in one or two directions depending on the method of support. If a slab is supported only on two opposite edges, for example, on two parallel walls or beams, it is called a one-way spanning slab since the slab bends about one axis and loads are distributed mostly in one direction. Analogically, if a slab is supported on all four edges, it may bend about two axes and is called a two-way spanning slab. In fully supported slabs, where the length is twice greater than the breadth, it is assumed that load distribution occurs only in one direction along the shortest dimension. However, some loads are always transferred to the end supports of such slabs. (Bhatt, MacGinley, & Choo, 2014, pp. 187-261)

According to the construction methods described previously, reinforced concrete slabs may be similarly classified into four groups of the same titles: cast-in-situ, precast, hybrid, and composite.

2.2.1 Cast-in-situ slabs

Cast-in-situ slabs, also called solid or monolithic, are formed in place. Therefore, there are no any strict limits for their overall dimensions due to the transportation. Such slabs are usually cast in one piece. However, huge structures may be split into several parts with construction joints, for example, if a slab cannot be constructed at once. Nowadays, the most common types of suspended cast-in-situ slabs are flat plate, flat slab, one-way or two-way slab with beams, trough slab, and waffle slab.

(i) Flat plate

Flat plate is a system of solid slabs with constant thicknesses, which are quite easy to construct and maintain. This system is considered suitable

for most constructions including asymmetrical floor layouts, curved slabs, and ramps. In case of big spans or loads, punching shear failure around columns may be avoided providing shear reinforcement. Alternatively, enlarged column heads, also called mushroom heads or column capitals, may be used. However, they complicate the construction process. (The Concrete Centre, 2017)

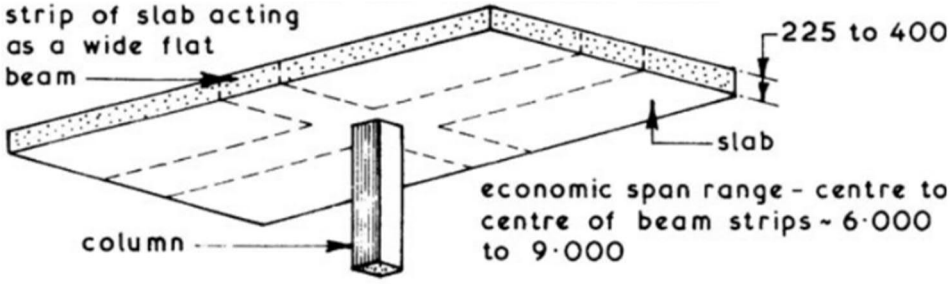

Figure 10. Flat plate (Chudley & Greeno, 2014, p. 784)

(ii) Flat slab

A flat plate slab with thicker sections around columns, also called drop panels, is a flat slab. Drop panels enable large shear resistance in the column area without the need of additional reinforcement. Similar to column capitals, drop panels require much more maintenance during construction. (The Concrete Centre, 2017)

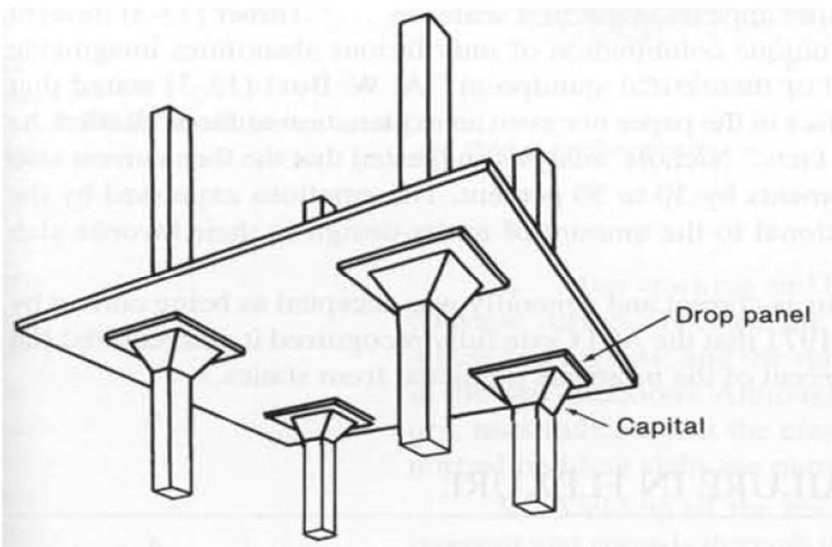

Figure 11. Flat slab with column capitals (White & MacGreogor, 2009, p. 607)

(iii) One-way slab with beams

Slabs may include beams incorporated between several or all columns. If the resulting slab panels formed by beams are one-way spanning, such slabs may be called as one-way slabs with beams. This system is the best

option for a rectangular column grid with long beam spans and shorter slab spans. (The Concrete Centre, 2017)

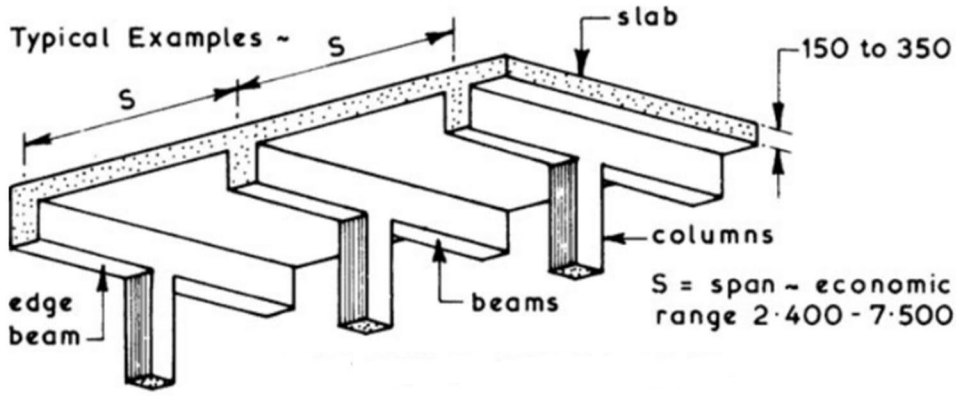

Figure 12. One-way beam slab with beams (Chudley & Greeno, 2014, p. 784)

(iv) Two-way slab with beams

On the contrary, if the length of resulting slab panels is equal or two times less than the breath, the panels are assumed to be two-way spanning and such slab may be called a two-way slab with beams. However, two-way beam systems often require more complicated formwork, reinforcement details, and maintenance than one-way beam systems.

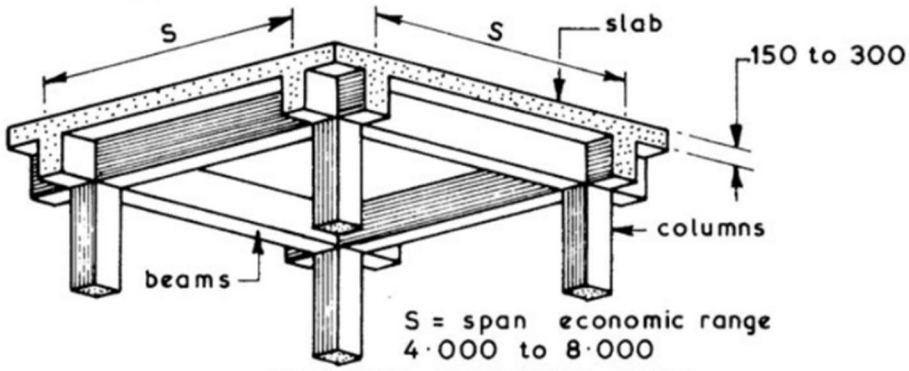

Figure 13. Two-way slab with beams (Chudley & Greeno, 2014, p. 784)

(v) Trough slab

Trough slabs, also called joist slabs or one-way spanning ribbed slabs, are best suited to a rectangular column grid with long slab spans and shorter beam spans. The lightly reinforced topping of such slabs allows for the easy installation of service paths. (The Concrete Centre, 2017)

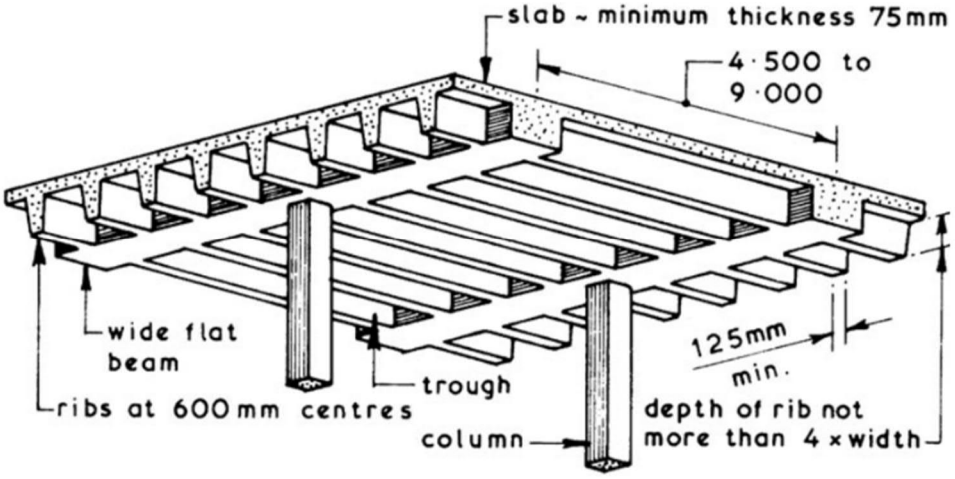

Figure 14. Trough slab (Chudley & Greeno, 2014, p. 785)

(vi) Waffle slab

Waffle slabs, or two-way spanning ribbed slabs, are best suited to a square column grid of larger spans than for the flat plate. Solid sections may be provided around column heads to increase punching shear resistance. (The Concrete Centre, 2017)

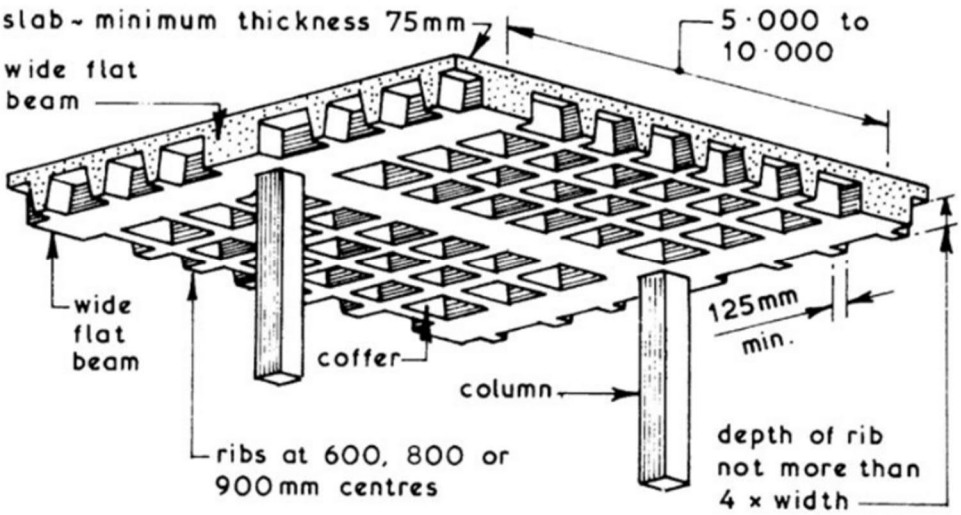

Figure 15. Waffle slab (Chudley & Greeno, 2014, p. 785)

(vii) Permanent formwork

Sometimes, trough and waffle slabs are built by using precast hollow clay or concrete fillers, which are left in place and serve as permanent formwork for the concrete in the ribs. The fillers are not load-bearing components, but they may act as supplemental insulation. The example of such slabs may be a hollow pot slab. (Chudley & Greeno, 2014, p. 787)

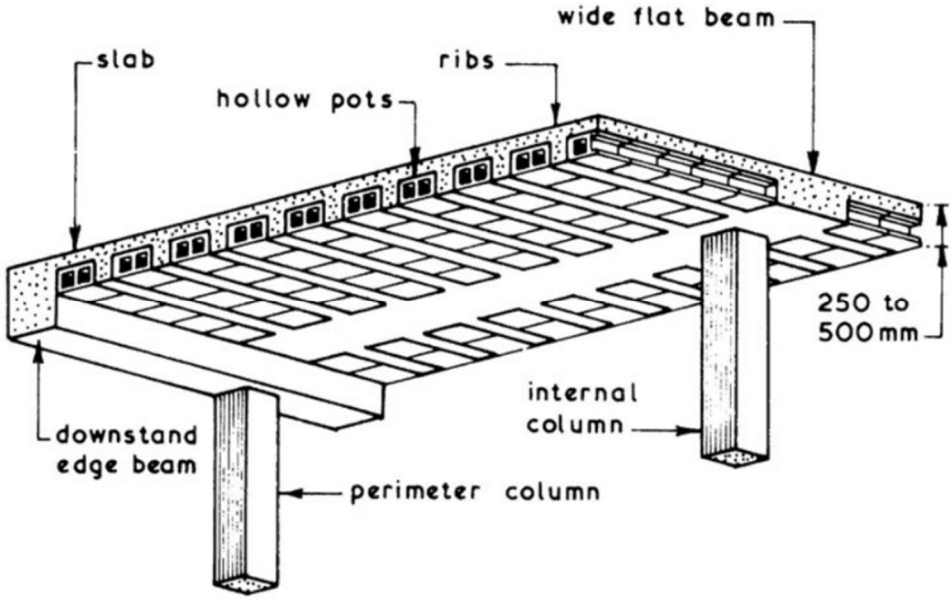

Figure 16. Hollow pot slab (Chudley & Greeno, 2014, p. 787)

2.2.2 Precast slabs

Precast slabs consist of prefabricated units, such as planks, predalles, or blocks spanning on beams or walls. In case of long spans or large loads, a reinforced concrete screed, usually a 50 mm site-poured concrete topping with a steel mesh, is provided. Such toppings act with slabs as an extension allowing for the increase of the load-bearing capacity, continuity of slabs, and possibility to add service paths. The most widely used types of precast slabs are hollow core slab, double tee slab, beam and plank, and beam and block.

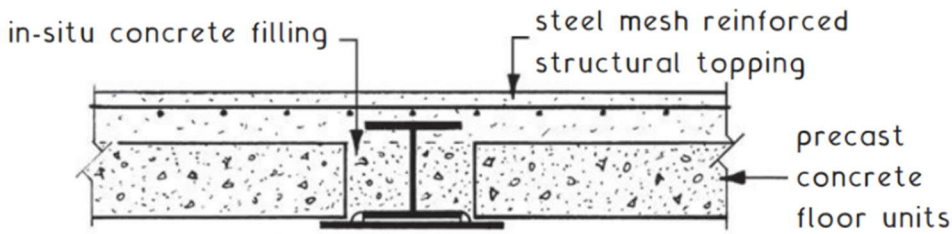

Figure 17. Precast floor structure (Chudley & Greeno, 2014, p. 792)

(i) Hollow core

Nowadays, a hollow core slab (hollow-core slab), also called a voided slab or hollow core unit system (HCU), is the most common way of precast flooring in Finland. It is a system of precast reinforced concrete planks with circular voids along their full length. Such voided structure enables to reduce the total unit weight and quantity of required raw materials, which greatly eases transportation and lifting reducing costs as well. However, due to the voids, the level of sound-proofing is quite low and it

is not possible to incorporate any transverse reinforcement. This obligates designers to procure slabs with special insulating covers and give a great attention to load-transferring connections between planks. Therefore, in order to achieve the distribution of loads across hollow core slabs and avoid the unequal vertical displacements of adjacent elements, the connections of hollow core slabs should be designed to develop the shear key action.

Figure 18. Hollow core slab (Forterra Building Products Ltd, 2017)

The nominal width of hollow core planks is 1200 mm grid, while the actual width is about 1197 mm allowing for tolerances and preventing the over-running of the floor layout. The planks are usually pre-tensioned, excluding some cases, for example, in private houses. Pre-tensioned hollow core planks are produced in factories approximately of 200 meters long and then cut by parts with a diamond circular saw, while non-stressed are made directly to exact length and are limited to seven or eight meters. (The Concrete Centre, 2017)

(ii) Double tee

A typical double tee slab (DT), also called TT-slab, is a structure of two concrete T-beams bonded between each other side by side. The strength of double tees is derived from the deep webs, while the flanges maintain the structure in lateral stability. The webs become shortened near the ends up to one-third in order to reduce the overall structural depth and raise the bearing capacity. The concrete is properly reinforced in that area due to combined shear, bending, and bearing loads. Double tees are more expensive than hollow cores, but they are lighter and require a less complicated supporting frame.

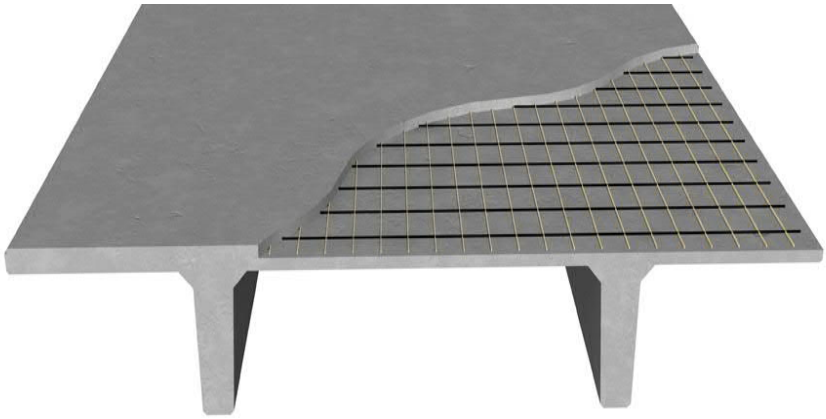

Figure 19. Double tee slab (AltusGroup, inc., n.d.)

Standard units are normally made up to 2500 mm wide, but they may be adapted to a specific project, for example, 3000 mm. The flange depth of double tees is quite shallow, about 50-75 mm, and, therefore, they should be reinforced with a concrete screed, typically 50 mm thick. Therefore, the top surface of double tee planks is always handled during the manufacturing process to form about 6 mm furrows providing an excellent shear grasp for cast-in-situ concrete. In the same manner as hollow cores, double tees are mostly prestressed excluding some cases. (The Concrete Centre, 2017)

(iii) Beam and plank

Beam and plank, also called a precast beam composite (PBC) system, means a slab assembled of prefabricated beams and planks spanning between them. Secondary beams supported on primary beams or walls are usually prestressed and carry prestressed normal or lightweight concrete planks installed onto them. A 50 mm concrete topping is cast onto the top surface. In comparison with double tees and hollow cores, this system is more versatile geometrically and may be used for various unusual floor layouts. Planks are generally about 50-100 mm deep and up to 4 m long, while the beams are up to 18 m for intermediate floors and 21 m for roofs. The beams may be provided with lattice girders acting as reinforcement and ensuring a strong bond with a screed. (The Concrete Centre, 2017)

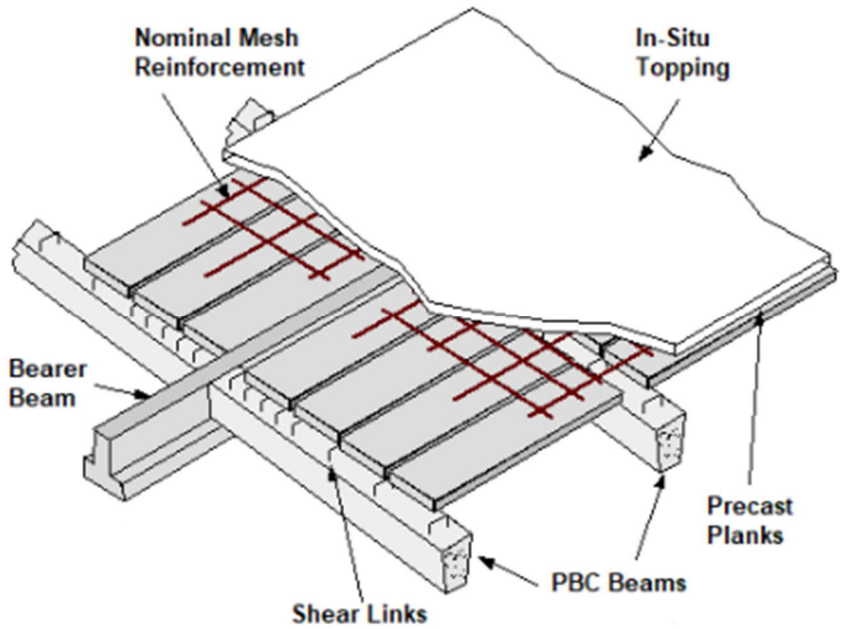

Figure 20. Beam and plank slab (The Concrete Centre, 2017)

(iv) Beam and block

The beam and block system is a quite fast and economical option. Also, it demonstrates great sound-proofing and fire-resistance properties. A beam and block slab may be constructed of variable building materials, such as timber, bricks, concrete, and other. Concrete beam and block slabs consist of a row of inverted prestressed tee-beams or lintels supported on walls, and lightweight concrete or polystyrene blocks arranged between the beams. The overall surface and gaps are handled with a grout, which excludes the air conduction between the blocks, helps to distribute loads, and prevents accidental movements. Such slabs are popularly used in domestic houses as a ground floor and, therefore, they are provided with an insulation layer in most cases. The insulation is usually incorporated into slabs and placed between blocks and concrete topping. (First In Architecture, n.d.)

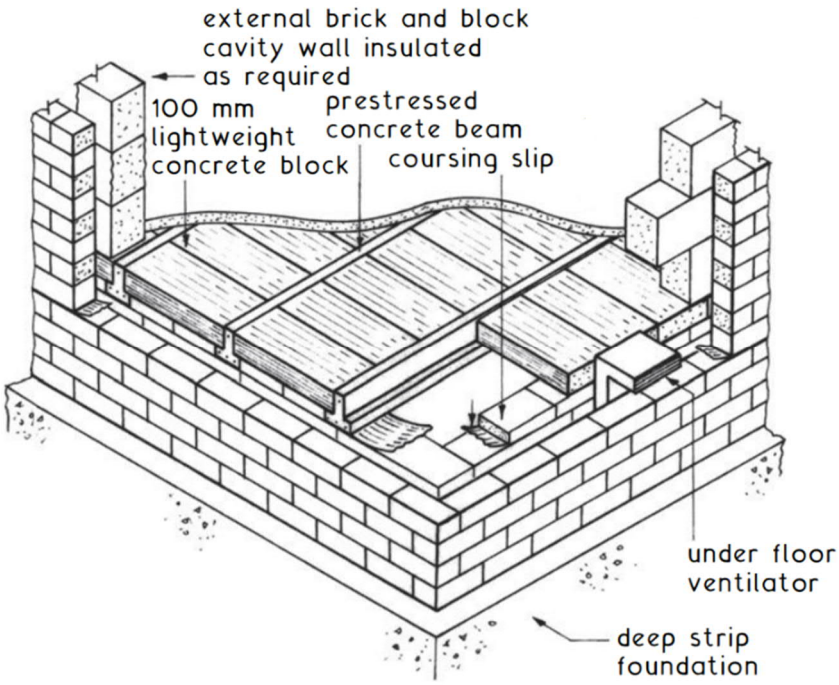

Figure 21. Beam and block slab (Chudley & Greeno, 2014, p. 762)

2.2.3 Hybrid slabs

Hybrid concrete slabs basically consist of a precast decking, site-poured concrete, and occasionally built-in lightweight elements. The decking is quite thin compared to the topping and is assumed as a partial load-bearing element. Hybrid slabs is a very beneficial option, as far as they make possible to achieve the best advantage of cast-in-situ and precast concrete. Nowadays, the most known types of hybrid slabs are half slab, filigree slab, bubble floor, IMS floor system, and soffit slab. Also, recently, one new building system called Airfloor has been developed and used in Italy.

Figure 22. Inverted double tee slabs (Nordimpianti System Srl, n.d.)

(i) Half slab

Half slab is a slab constructed of similar to double tee inverted prestressed units up to 13 m length with constant cross sections, which are filled with concrete. U-panels, inverted double tee, or triple tee planks may also be used in such a system. A lighter slab is achieved by the inclusion of concrete and clay hollow blocks or polystyrene in-fills, which are then covered with cast-in-situ concrete. The in-fills also increase the sound-proofing and fire resistance. Alternatively, voids may be created within the slab by using corrugated steel sheets or thinner concrete slabs along its length. This system is very efficient since half slabs generally do not require any bottom formwork, which greatly increases the construction speed and reduces the costs. Half slabs possess good sound and fire-resistant properties and are quite flexible for service paths. The thickness and shape may be altered at site if needed, which makes them very beneficial compared with precast products. (Nordimpianti System Srl, n.d.)

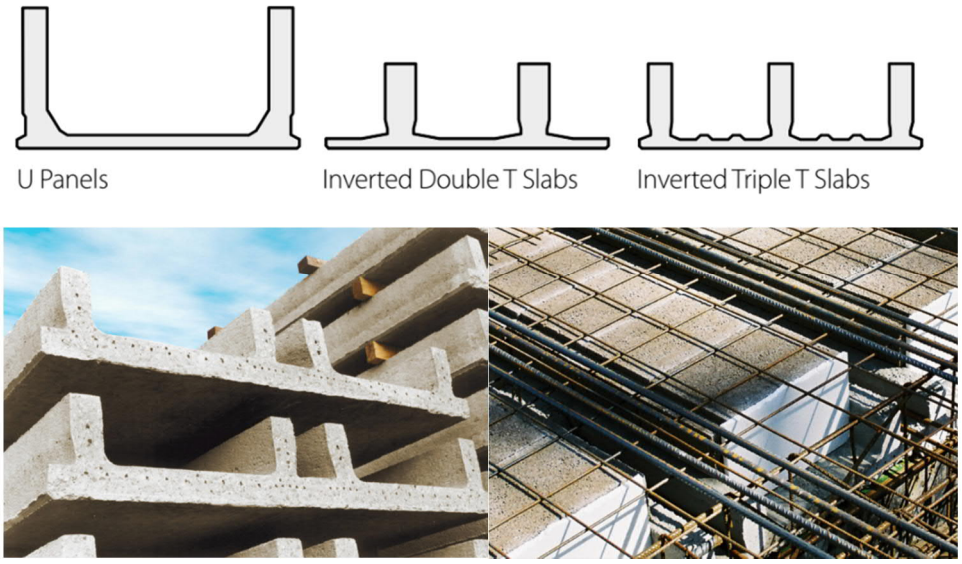

Figure 23. Half slabs: sections (top); precast planks (bottom left); half slab with a mesh and in-fills (bottom right); (Nordimpianti System Srl, n.d.)

(ii) Filigree slab

Filigree slabs are basically half slabs, but the concrete webs are replaced with lattice girders. The features are mostly the same as in half slabs. However, filigree slabs may be assumed more flexible and universal. Also, they are easier to produce and handle and, therefore, are more popular in Finland.

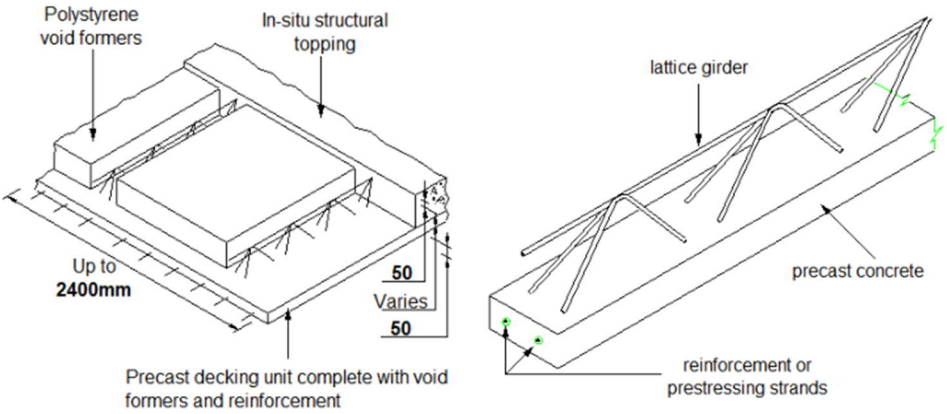

Figure 24. Filigree slab (left); lattice girder (right); (The Concrete Centre, 2017)

(iii) Bubble deck

Bubble deck is an aptly named solution similar to the hollow core slab system, but, instead of one-way cylindrical, the slabs have biaxial bubble-shaped voids. The maximum unit size is about 14x3 m. Bubble decks may be hybrid and precast or, alternatively, assembled at site with raw materials. Both pre-tensioning and post-tensioning may be applied to bubble decks by the placement of prestressed tendons in joints and by the omission of several rows of plastic spheres.

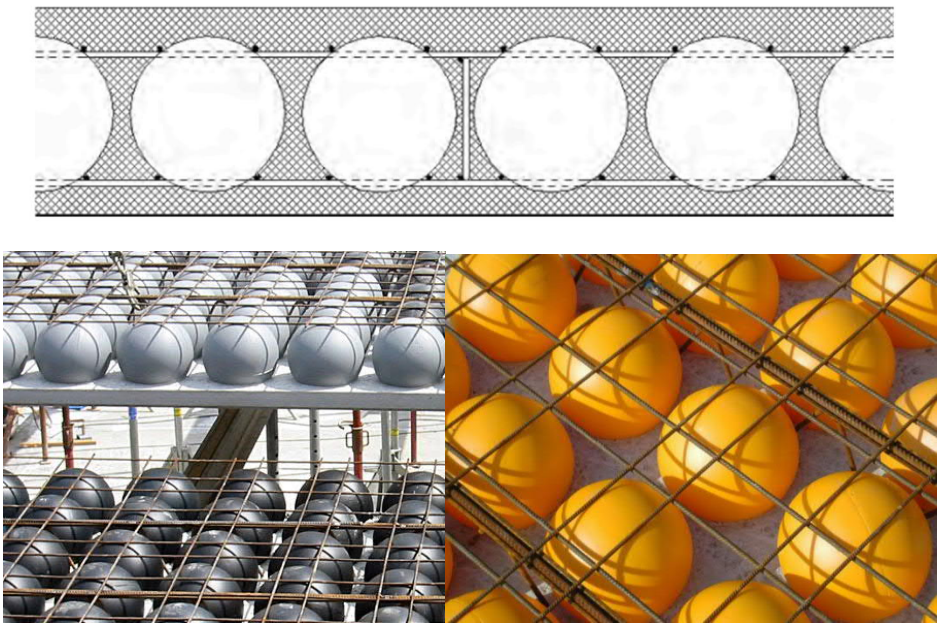

Figure 25. Bubble deck: cross section (top); precast planks (bottom); (BubbleDeck International A/S, n.d.)

A specific voided shape is achieved by casting of concrete around hollow plastic spheres, about a football size, arranged among two layers of spot-welded reinforcement. The structure of bubble decks allows for a great

reduction of the dead weight and enables to construct floors to a wide range of layouts and shapes. Also, it speeds up the construction process since formwork at the bottom is not needed. One great advantage over other slab systems is that bubble deck floors may be constructed without any beams at all, which makes possible to reduce the overall building height and ease installation of service paths under the bottom surface. However, such floors require temporary supports. Finally, bubble decks are very resistant to earthquakes. The lightweight slab and column system acts similarly as an elastic membrane reducing seismic forces imposed on a building and sufficiently transferring them to stiff vertical structures. (BubbleDeck International A/S, n.d.)

(iv) IMS floor system

IMS floor system is a quite interesting and unusual option of a two-way spanning prestressed slab without a screed, where precast elements are installed before cast-in-situ beams carrying them. This system is mainly chosen to reduce costs and accelerate the construction rate. Despite some economic benefits, it is also considered sustainable and safe, for example, in the case of seismic activity.

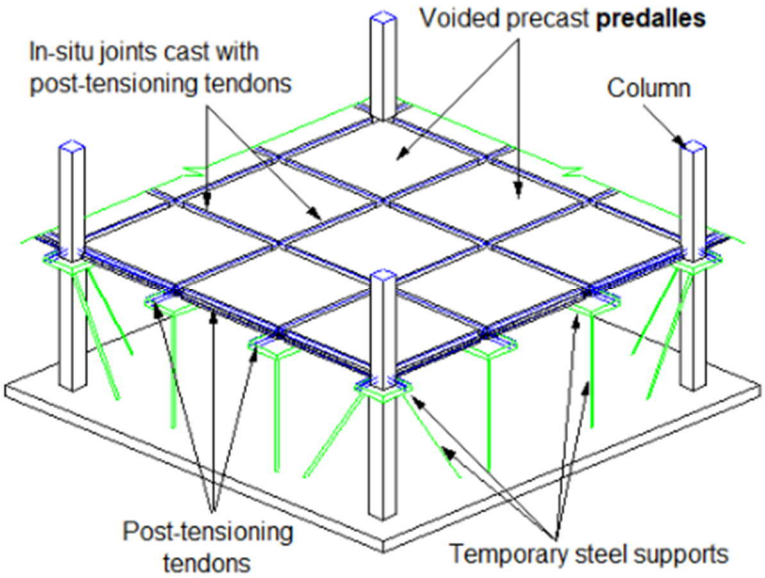

Figure 26. IMS floor system (The Concrete Centre, 2017)

A set of precast concrete planks, or predalles, is arranged among a grid of post-tensioned tendons anchored to columns or anchoring points. Under the planks, partial formwork is placed beforehand. The whole floor structure is carried by temporary supports during construction. The planks are positioned in such a way, so beam-shaped gaps, including the tendons, are formed enclosed by their edges and the bottom formwork. Then, the gaps are filled with concrete that bonds the tendons and planks with each other. Once the concrete is hardened and the tendons are released, the concrete-filled gaps act as post-tensioned beams. In addition to providing for vertical load transfer, tensioning contributes

also to the moment bearing of the slab. Therefore, to increase moment bearing, tendons are subjected to tension not only in the strength axis of a slab, but vertically as well. (The Concrete Centre, 2017; Dimitrijevic, Gavrilovic, & Stolic, 2000)

(v) Soffit slab

Soffit slab may be assumed as a variation of the IMS floor system, where precast planks are thinner and are covered with a thick concrete layer. Soffit slabs are constructed of pre-tensioned soffit planks partially replacing bottom formwork, and in-situ concrete cast onto the top and between the planks. When the soffit planks are installed, a grid of tendons is arranged among them. In the same manner as in the IMS system, concrete is cast forming prestressed concrete beams between the planks. The main advantage of such slabs is that they have a flat soffit, which is suitable for the direct application of plaster finishes or attached dry linings. (The Concrete Centre, 2017)

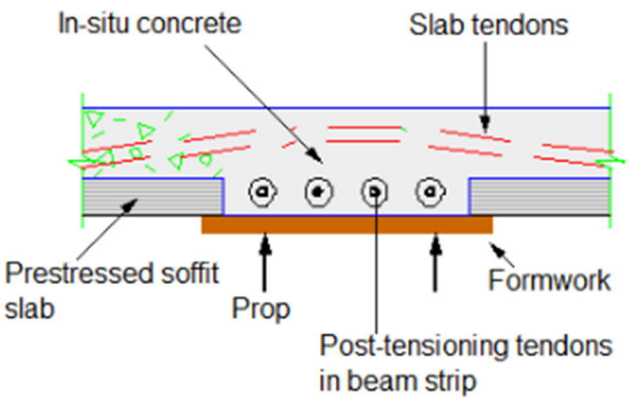

Figure 27. Soffit slab (The Concrete Centre, 2017)

(vi) Airfloor system

Airfloor is a building system of composite columns, beams, and hybrid slabs supported on the beams, where in-situ concrete may be poured in one go for all elements of one building floor. Airfloor slabs may also be used separately, for example, in standard concrete frames. An Airfloor slab is a light and slim flat slab with good thermal insulation and fire resistance. It also possesses quite good seismic-resistant properties. Precast planks consist of an EPS-insulation layer, similar to a row of bounded beams, at the bottom and lattice girder reinforcement incorporated into gaps and on the top. Such lightweight structure with no concrete allows for the fast and easy placement of the precast planks, which later may be used as a working platform. Some small planks may be installed even without the help of a crane. The planks also are used as a casting formwork for in-situ concrete. Casting may start immediately without the need of additional mesh reinforcement. Once cast, the concrete envelops the insulation and acquires the shape similar to a trough slab. The dry weight of a final slab is less than 50 kg/m^2, and the

maximum self-supporting span is up to 6 meters. (Tecnostrutture s.r.l, n.d.)

Figure 28. Airfloor slab (Tecnostrutture s.r.l, n.d.)

2.2.4 Composite slabs

(i) Composite slab

Composite slab is a lightweight cast-in-situ concrete slab cast onto the top of a profiled steel decking. Alternatively, precast units consisted of a concrete layer cast onto a steel deck may be produced at factory and delivered to a site. Composite slabs are usually the components of steel frames spanning on steel beams but may be used in concrete frames as well. This system is considered quite fast and easy since the decking is very lightweight, and it may be manufactured and installed in a very short period. Furthermore, it serves as permanent formwork and may be used as a working platform. The obvious disadvantage of this type of flooring consists in the properties of steel. Steel possesses a high level of thermal conductivity. Therefore, in most cases, the steel decking requires a supplemental fire-resistant layer of insulation increasing the thickness of a floor and making construction more expensive and time-consuming. (BCSA, n.d.)

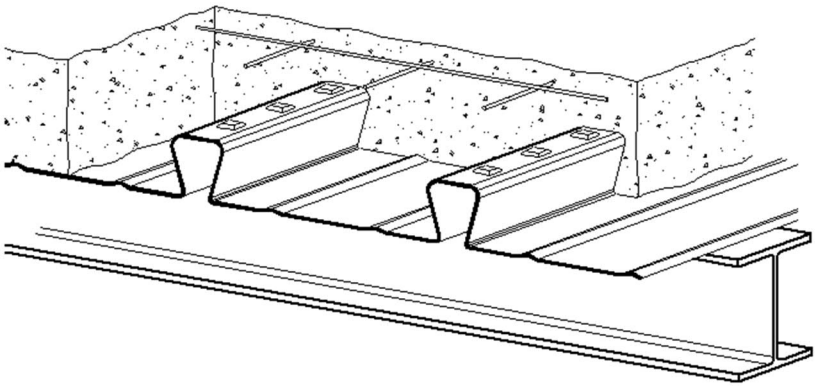

Figure 29. Composite slab (BCSA, n.d.)

(ii) Shallow floor

One option that may be applied for composite slabs is a shallow floor. It offers a possibility to decrease the overall height of a building and make a flat ceiling. The shallowness is achieved by the installation of precast or composite slabs onto the bottom flanges of supporting steel beams. In such cases, beams are made asymmetrical, so the bottom flange is wider. The webs of beams are normally provided with circular holes, for example, in delta beams. This enables to easily anchor slabs to beams and increases the torsion resistance. (BCSA, n.d.)

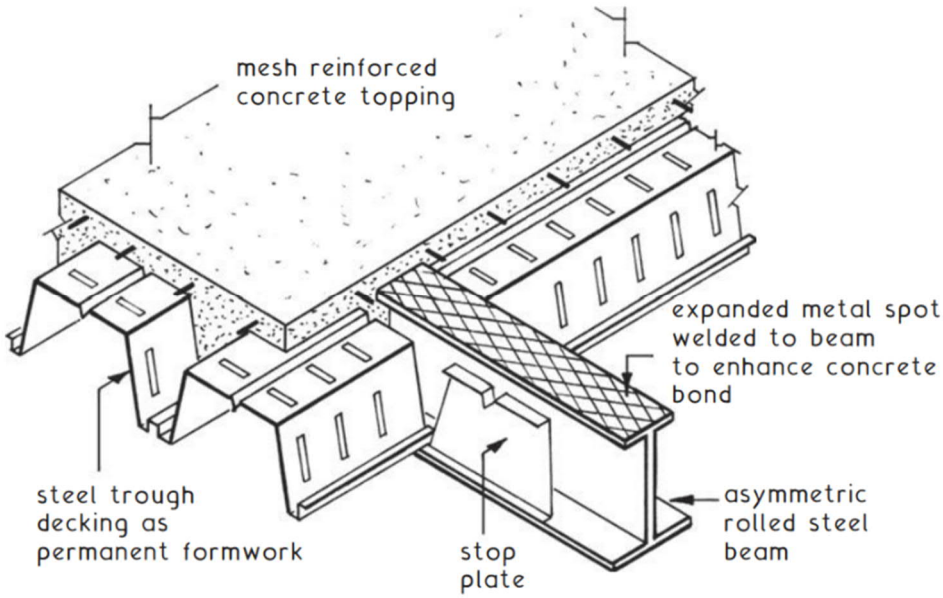

Figure 30. Composite shallow floor (Chudley & Greeno, 2014, p. 793)

2.3 Detailing of slabs

This section focuses on the detailing of reinforced concrete slabs, mostly on cast-in-situ and hollow core slabs. The provided information is superficial and is required for the extensive study of the Luja-Superlaatta

slab. It covers such topics as the typical reinforcement details, connections, openings, and structural types of concrete slabs.

2.3.1 Reinforcement

The reinforcement of concrete slabs is basically provided in the form of steel rebars in the purpose of carrying tensile stresses, which plain concrete cannot resist efficiently. The number, diameter, spacing, shape, and type of rebars should be designed according to appropriate regulations. For example, in Finland, they are Eurocode 2 (EN 1992), national annexes to Eurocode 2 (SFS-EN 1992), and other. Rebars are mostly placed closer to the surface of a concrete unit to achieve the best efficiency. However, the concrete cover over steel reinforcement should be respected and is always required to protect the reinforcement from corrosion and to control the degree of the fire resistance.

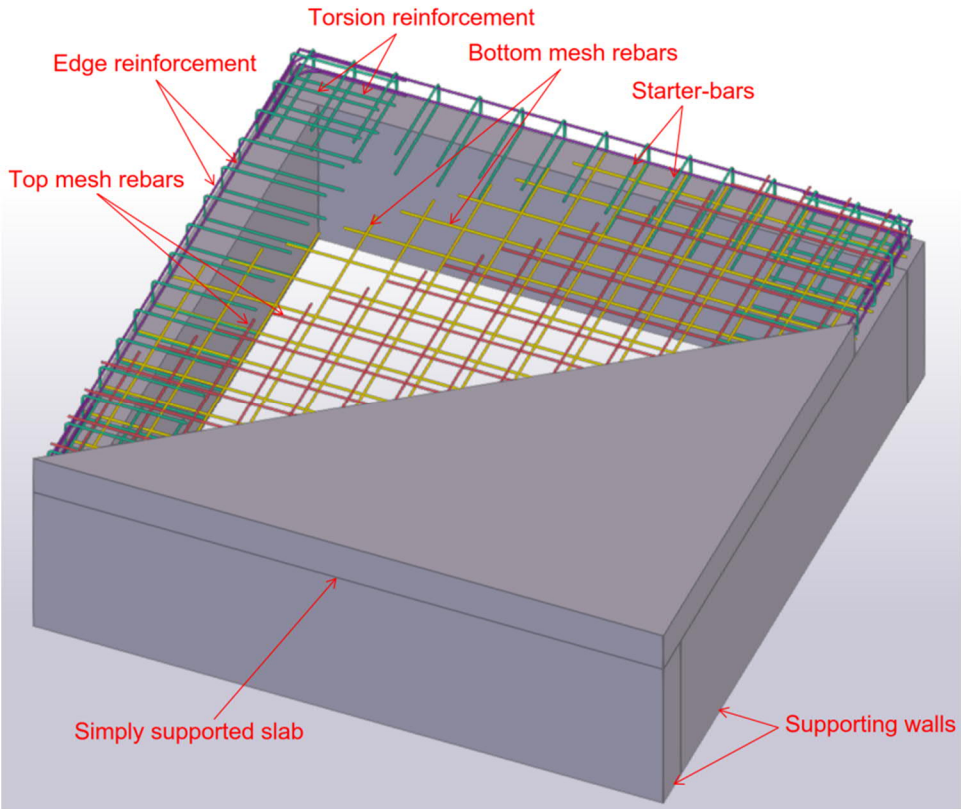

Figure 31. Example of slab reinforcement (Tekla Structures model snapshot)

(i) Moment reinforcement

The reinforcement of a simply supported solid slab is one or two layers of a mesh formed of two sets of steel rebars placed perpendicularly to each other. In one-way spanning slabs, the mesh may be divided into main steel and distribution steel. Main steel resisting major bending stresses is always directed along the shortest span and is placed at the greatest

effective depth nearest to the surface of a slab. Distribution steel, also called transverse steel, is placed next to the main steel in the perpendicular direction and serves to the purpose of tying the slab into one piece and uniformly distributing loads across it. Distribution steel should be designed at least with 20 % of bearing capacity of main steel.

Main steel is usually provided at the bottom of the slab section to resist the local maximum bending stresses arising by a sagging (positive) moment at midspan. However, in continuous slabs, maximum local stresses may also occur from a hogging (negative) moment above supports. In this case, required reinforcement at hogging areas is designed at the top of the section in the same manner. (Bhatt, MacGinley, & Choo, 2014, pp. 187-261)

(ii) Torsion and restrained edge reinforcement

In slabs restrained along sides, where the edges are prevented from a lifting, cracks may occur near the corners. This happens due to torsional moments increasing closer to the point of meeting of two slab edges. Therefore, the corners of such slabs are provided with torsion reinforcement, usually two layers of a small mesh or two sets of U-shaped rebars placed perpendicularly to each other. The area of reinforcement required in each of these layers should be minimally 75% of mid-span reinforcement. (The Concrete Centre, 2017)

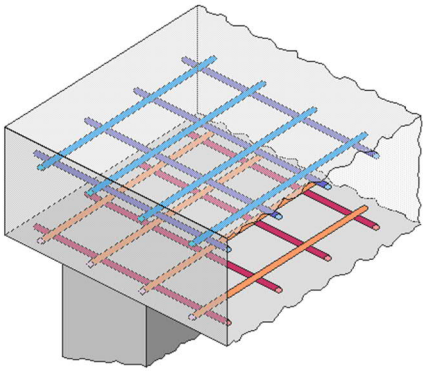

Figure 32. Torsion reinforcement (The Concrete Centre, 2017)

Analogically, along the restrained edges of simply supported slabs, a partial hogging moment normally occurs, wich obligates designers to provide the edges with supplemental top reinforcement, which must be capable of resisting at least 25% of the maximum moment in the adjacent span. Such reinforcement should also extend at least 0.2 times the length of the adjacent span, measured from the face of the support. (The Concrete Centre, 2017)

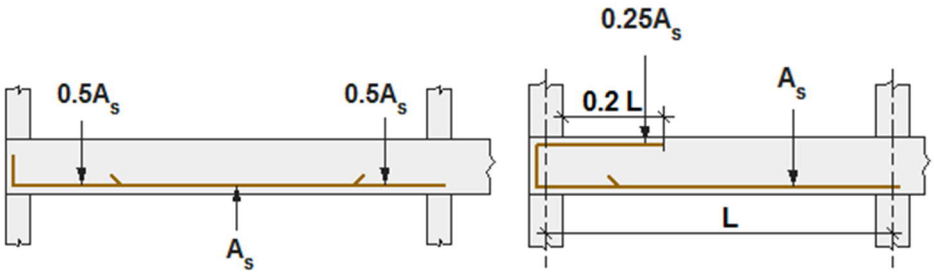

Figure 33. Edge reinforcement: unrestrained edge (left); restrained edge (right); (The Concrete Centre, 2017)

(iii) Shear reinforcement

Solid concrete slabs possess quite high shear strength. Therefore, under normal loads, shear stresses are not critical and shear reinforcement is not required or may be designed only near supports, for example, shear links or bent-up bars. However, under heavy loads or in slabs with big spans, shear reinforcement, such as shear links or studs, is provided along the full length, but only in thick sections not smaller than 200 mm thick. Also, it is a normal practice to provide shear reinforcement in each rib of ribbed slabs, as far as such slabs are mostly designed to carry heavy loads. (Bhatt, MacGinley, & Choo, 2014, p. 201)

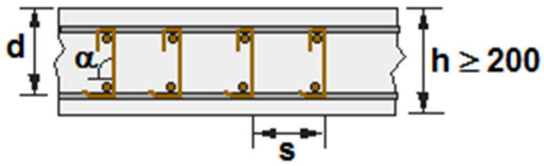

Figure 34. Shear links (The Concrete Centre, 2017)

(iv) Punching shear reinforcement

One more typical failure that may occur in solid slabs is a punching shear failure. The failure mostly takes place locally near column supports or intently loaded areas, for example, in pad footings. To prevent the punching, the section of a slab may be thickened in such zones: with the help of drop panels or column capitals in suspended slabs; deeper sections in footings. Alternatively, supplemental reinforcement, such as punching shear reinforcement, shear hoops, heads, ladders, or rails, may be added. (The Concrete Centre, 2017)

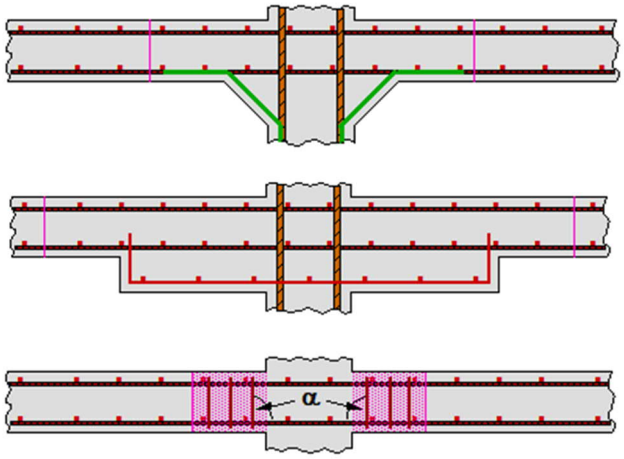

Figure 35. Punching shear reinforcement: column capital (top); drop panel (middle); shear links (bottom); (The Concrete Centre, 2017)

(v) Free edge reinforcement

Along free unsupported edges, slabs should include reinforcement bars arranged according to Figure 36. (The Concrete Centre, 2017)

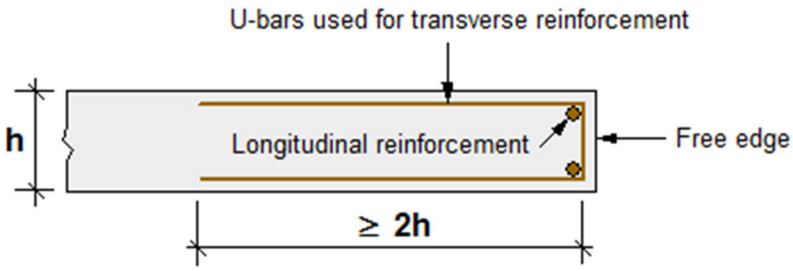

Figure 36. Free edge reinforcement of a slab (The Concrete Centre, 2017)

(vi) Precast plank reinforcement

Reinforcement steel in precast planks depends on the type of a slab. It may be pre-tensioned, post-tensioned, or non-stressed. Solid planks, such as are used in the beam and plank system, may be reinforced with one or two layers of a non-stressed steel mesh in a similar manner as cast-in-situ slabs. However, distribution reinforcement is not provided in hollow cores and double tees due to voids.

(vii) Diaphragm action with hollow core slabs

When hollow core slabs are used as floors or roofs, the whole floor system should work as a diaphragm in order to resist and transfer lateral loads. Lateral loads will be applied to building structures in the form of lateral earth pressures, wind loads, seismic loads, accidental actions, or additional horizontal loads due to the eccentricity of structures. The successful transmission of lateral loads is ensured by connections between the diaphragm, building elements to which the lateral loads

were applied, and lateral-resisting elements, which carry the loads to the foundation. A complete diaphragm is compromised from several elements: boundary elements, collectors, chords, drag struts, longitudinal joints, and transverse joints (see Figure 37). (Buettner & Becker, 1998, pp. 4/1-4/9)

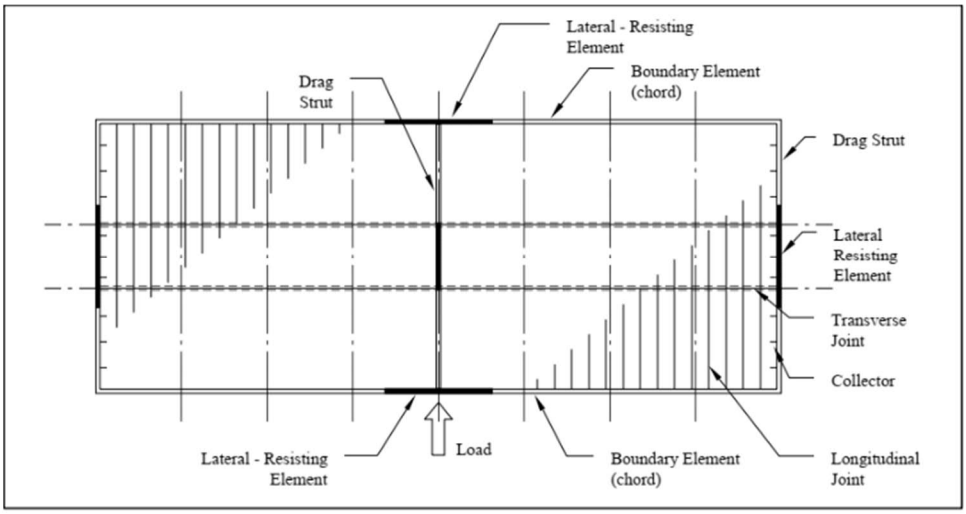

Figure 37. Diaphragm elements (Buettner & Becker, 1998, p. 4/6)

(viii) Connection reinforcement in hollow core slabs

In hollow core slabs, longitudinal joints are reinforced and filled with a grout ensuring the shear resistance, while transverse joints are also reinforced, but act as a drag strut with axial tension and compression to transfer lateral loads. The connections of a diaphragm to lateral-resisting elements are made with elements called collectors and designed case by case. At mid-supports, the continuity of slabs is achieved by placing reinforcing bars in grouted keyways, structural toppings, or by concreting rebars into voids.

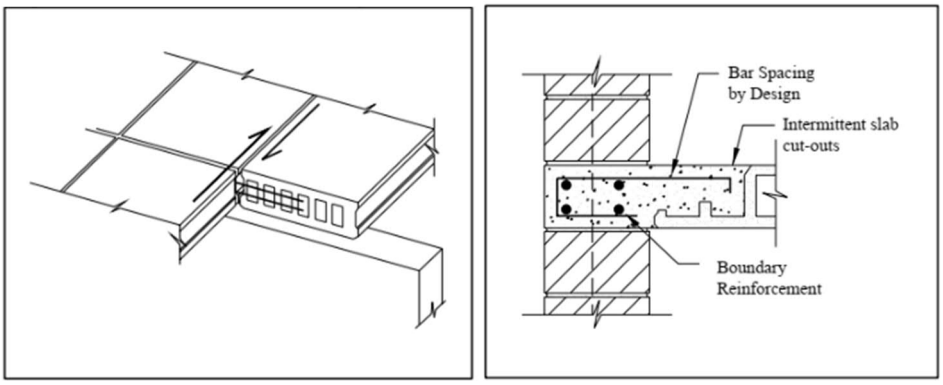

Figure 38. Joint reinforcement (left); Collector detail (right); (Buettner & Becker, 1998, p. 4/7)

2.3.2 Connections

(i) Anchorage

Suspended slabs must be anchored in order to avoid any movements and to ensure the efficient transfer of loads to supports. Even a small displacement causing changes in supporting areas may decrease the bearing capacity of a connection and lead to a slab-to-support failure. Thus, in monolithic slabs, at least 50% of span rebars should be extended and anchored to supports. Bottom reinforcement in such zones should be capable to resist the half of a design shear force in addition to any axial tensile force. The anchorage length of rebars (l_{bd}) should be controlled and may be calculated according to Figure 39.

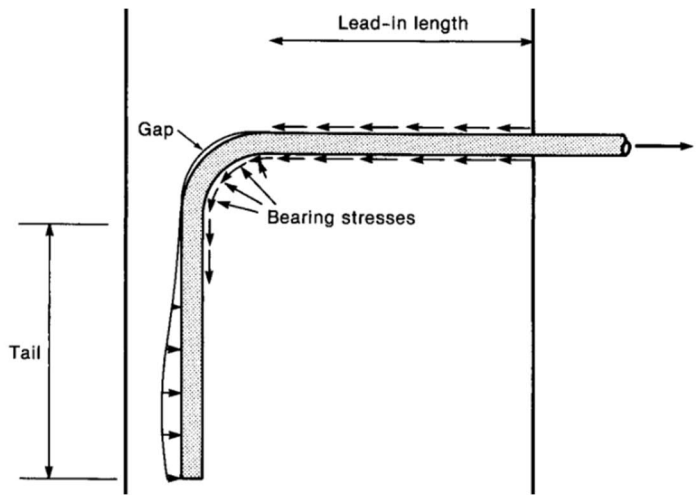

Figure 39. Anchorage (White & MacGreogor, 2009, p. 370)

At intermediate supports, bottom reinforcement should extend beyond the face of support to the length of ten rebar diameters. Furthermore, it is advisable to provide splicing across the support to provide resistance to accidental positive moments. For hooks and bends with bar sizes at least equal to 16 mm, the anchorage should have a length not less than the diameter of the mandrel, or twice the diameter of the mandrel in other cases. (The Concrete Centre, 2017)

Alternatively, slabs may be anchored to supports with the use of variable anchorage systems, such as laps, couplers, corbels, bolted connections, welded connections, or other.

(ii) Direct and indirect supports

Slabs may be supported directly or indirectly. If a slab is bearing directly onto the cast surface of another member, for example, precast slab connections, it is directly supported. Otherwise, the slab is indirectly supported.

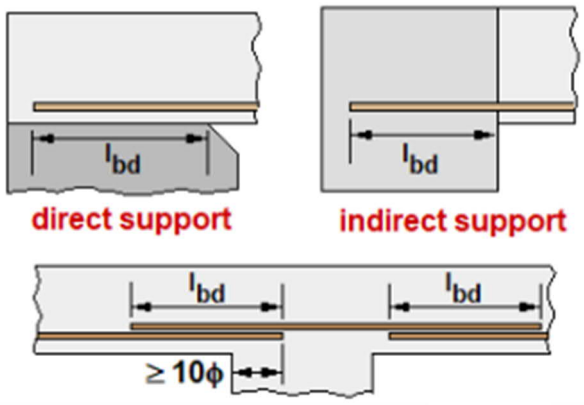

Figure 40. Anchorage at supports: direct (top left); indirect (top right); intermediate (bottom); (The Concrete Centre, 2017)

Bearings of direct supports may be designed in several ways (The Concrete Centre, 2017):

a) Dry bearing means a connection of two even surfaces, where one is resting directly on another.
b) Dry packed may be applied to elements with even or uneven surfaces. In both cases, components are located on thin, usually 3 to 10 mm thick, shims, and a resulting small gap is filled with a semi-dry sand or cement grout.
c) Bedding bearing may be used when mating surfaces are uneven. In this case, components are set onto semi-wet sand or cement mortar, which takes the shape of uneven surfaces.

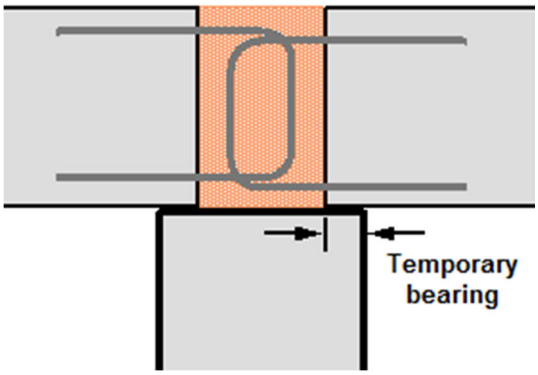

Figure 41. Extended bearing connection (The Concrete Centre, 2017)

d) Elastomeric bearing is achieved with the help of bearing pads, such as neoprene rubber pads or strips, and is used if considerable deformations are expected.
e) If the bearing area of a support is not large enough to directly support all mating components, an extended bearing may be designed. The components of such connection are supported partly on the support, and then reinforced in-situ concrete is cased to complete the connection. Thus, two or three components may meet

at the same place, where otherwise a direct connection would not be possible.

f) To allow for site tolerances, it may be necessary to insert a sandwich pack between surfaces, which is usually assembled of steel or steel-rubber elements.

(iii) Shear key mechanisms

One typical connection in precast slabs is a plank-to-plank connection at the longitudinal interior edges. To obtain the transverse distribution of load effects along slabs and prevent uneven vertical displacements at longitudinal joints, such connections must be designed to develop the shear key action between adjacent planks. Therefore, one of the following shear transfer mechanisms may be used:

(iii.i) Shear friction joint

Shear friction joint is achieved by pouring a fine in-situ concrete filling in a gap between planks. The planks are anchored to supporting beams that prevent the separation of the planks and serve as external restraints. Thus, when one of the planks is subjected to a load, the forces inside the joint are coupled by a diagonal compression, repeated along the full length of the joint, and transferring forces to the faces of the planks, which take loads by friction. This way the action of shear friction is described.

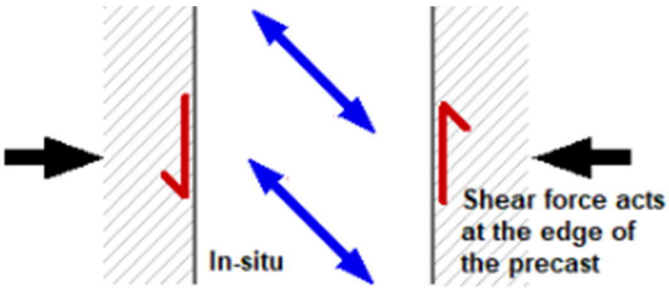

Figure 42. Shear friction joint (The Concrete Centre, 2017)

(iii.ii) Castellated joint

Castellated joint is very similar to the previous one. However, this type of in-situ filled joint has two shear keys in the form of channels on each side, which may be easily moulded with formwork. Shear keys are usually about 50 mm deep, which is assumed enough to prevent precast planks from sliding over a shallow keyway. This connection is usually applied to hollow core slabs.

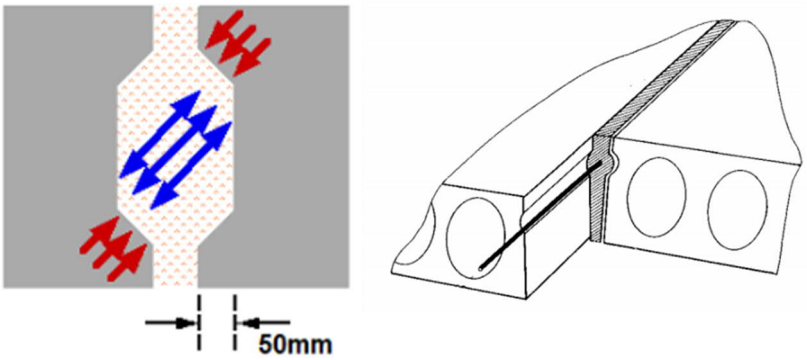

Figure 43. Castellated joint (left); (The Concrete Centre, 2017); longitudinal shear key in a hollow core slab (right); (International Federation for Structural Concrete, 2008, p. 6)

(iii.iii) Shear wedging

Shear wedging, in comparison with other mechanisms, requires only a narrow strip of grout or mortar made with fine sand, cement, and water. The adjacent surfaces of mating planks should be roughened to make protrusions on both sides. Thus, the protrusions form a series of small irregular shaped castellations and “wedge” compressive forces inside them.

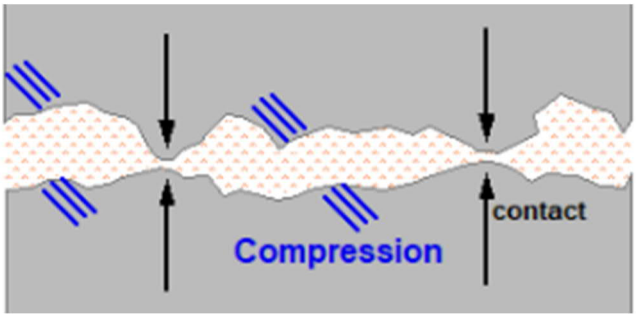

Figure 44. Shear wedging (The Concrete Centre, 2017)

(iii.iv) Mechanical joint

Mechanical joint is a different way to transfer shear forces between planks. Steel plates are cast into the planks and welded together at site. Shear transfer is proceeding by a mechanical action between the welded plates. Forces acting on welds are shear and tension, and the welds must be designed to resist them. This type of connection is commonly used in double tee slabs. (The Concrete Centre, 2017)

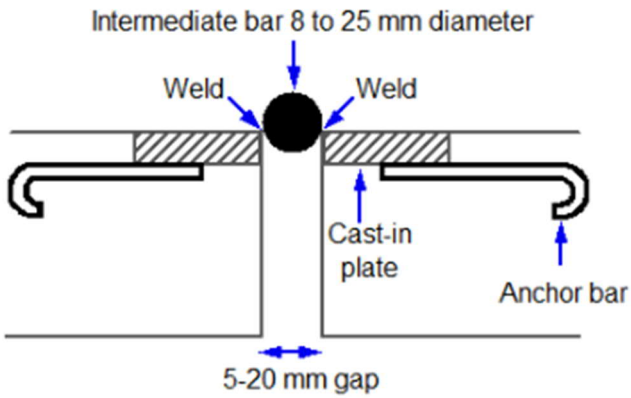

Figure 45. Mechanical joint (The Concrete Centre, 2017)

(iv) Joints

Concrete slabs may expand and contract with the changes of temperature and humidity level, especially during the drying of fresh concrete. When movements are restrained by contact with supporting soils, granular fillings, adjoined structures, or reinforcement within a slab, tensile stresses develop, and concrete may crack. Although cracks in concrete cannot be prevented entirely, to avoid random cracking, joints in concrete slabs may be created by forming, tooling, sawing, and placement of joint formers. There are three typical joints most widely used (National Ready Mixed Concrete Association, n.d.):

a) Contraction joints are used to make weakened concrete sections at predetermined locations, where cracks are controlled and develop along a straight line.
b) Isolation or expansion joints serve for the isolation of slabs from the other components of a structure. Such joints allow for independent vertical and horizontal movements between adjacent structures.
c) Construction joints are usually designed in places, where two concrete surfaces are met. Also, they are typically placed at site at the end of a working day or when concrete pouring is stopped for a long time. It is possible to achieve bond and extend reinforcement throughout a construction joint.

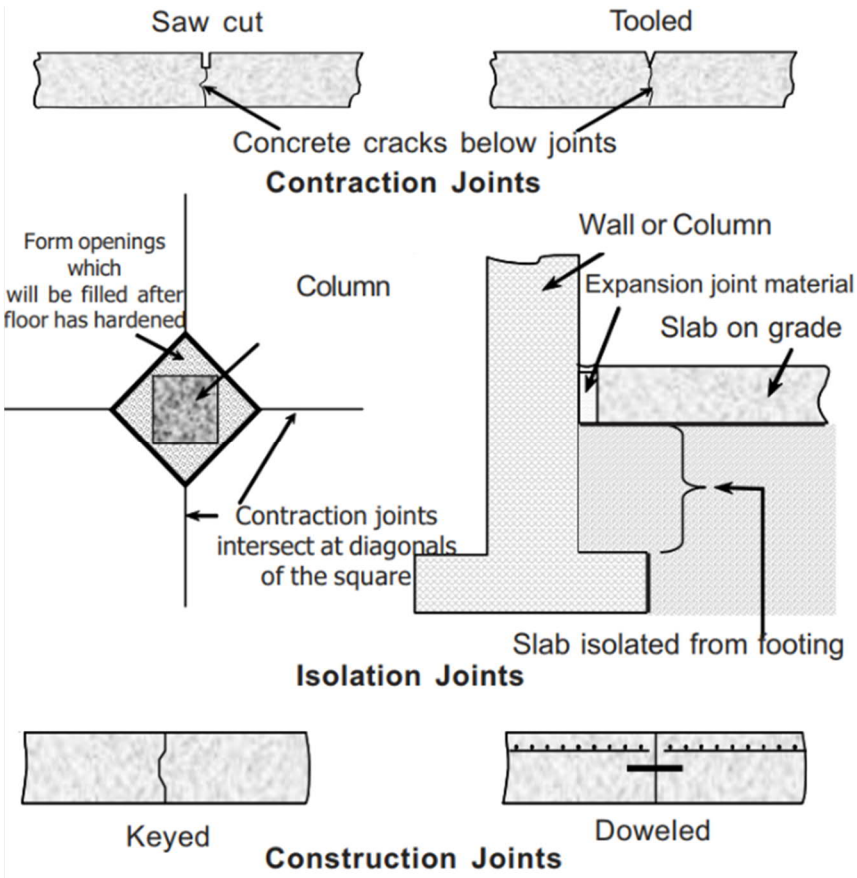

Figure 46. Joints in concrete slabs (National Ready Mixed Concrete Association, n.d.)

2.3.3 Openings

(i) Size limits

If holes or groups of holes are considered to be of structural significance, such as in flat slabs, the design data should indicate any special reinforcement. Where holes or groups of holes are considered to be structurally insignificant, the following regulations must be satisfied (The Concrete Centre, 2017):

- Small isolated openings with sides smaller than 150 mm may be generally ignored structurally.
- The distance from the edge of an opening to the unsupported edge of a slab should not be less than the width of the opening measured perpendicularly to the edge of the slab.
- The maximum width of an isolated opening, measured perpendicularly to the spanning direction of a slab, is 1000 mm.
- The maximum length of an isolated opening, measured parallel to the spanning direction of a slab, is 25% of the slab width.
- The maximum total width of series of openings, measured perpendicularly to the spanning direction of a slab, is 25% of the slab length.

(ii) Openings with sides smaller than 500 mm

If the major dimensions of an opening do not exceed 500 mm, the reinforcement of a slab in the affected zone may be rearranged in a way that the maximum resultant spacing of rebars is equal whether three times the slab thickness or 500 mm. Alternatively, the affected rebars may be trimmed or slid back. In this case, trimmer bars of the same diameter with anchorage length of 45 bar diameter beyond the edge of the opening must be provided at all sides of the opening. (The Concrete Centre, 2017)

(iii) 500-1000 mm openings

For large openings with major dimensions in the range of 500-1000 mm, the treatment is generally the same, but trimmer bars must be provided in both the top and bottom of a slab. The total area of the trimmer bars must be equal at least to the total area of removed rebars. Furthermore, U-shaped rebars may be provided at each face of the openings. However, if the slab thickness is more than 250 mm, supplemental diagonal trimmer bars should also be added in both the top and bottom of the slab near each corner of the openings. (The Concrete Centre, 2017)

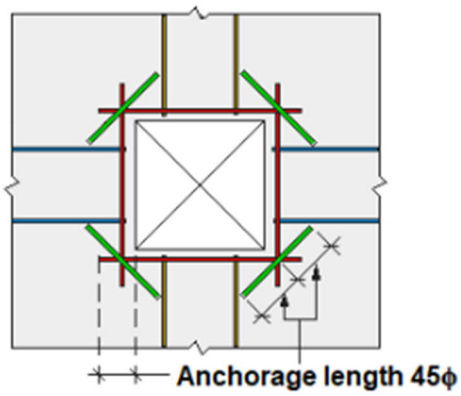

Figure 47. Example of an opening in a solid slab (The Concrete Centre, 2017)

(iv) Group of openings

Groups of openings lying within boundaries of 500 mm and 500-1000 mm may be treated as single openings of the same size. However, trimmer bars and U-shaped rebars may be provided only on the sides of the boundaries, but not for each opening individually. (The Concrete Centre, 2017)

(v) Openings in precast slabs

Openings in precast slabs are usually quite specific and should be designed according to instructions provided by a producer. Thus, the position and dimensions of openings in hollow core slabs are determined

by the thickness and number of voids. The category of openings depends on whether an opening cuts steel strands or not.

In double tee slabs, regulations for openings also vary by the size of planks. It is recommended to cut double tees only in the range between ribs, but openings at the edges are possible as well.

Nevertheless, several design regulations may be considered in most cases (Betoniteollisuus Ry, 2012; Ry, Betoniteollisuus, n.d.):

- Openings in hollow core slabs should never be designed near end supports. Otherwise, supplemental supports or appropriate reinforcement should be provided.
- If an opening entirely cuts a hollow core plank, two supports, usually beams, should be provided at each cut edge of the plank (see Figure 48).

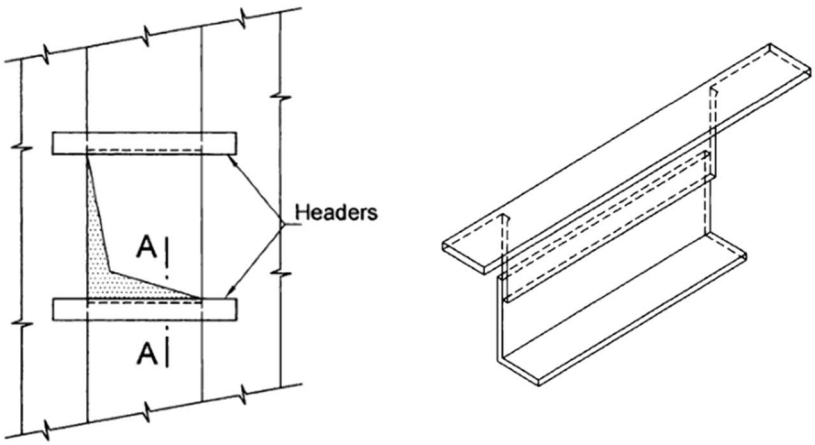

Figure 48. Example of an opening in a hollow core slab (left); header (right); (Calavera, 2012, p. 322)

- The maximum total width of series of openings in a double tee plank, measured perpendicularly to the spanning direction, must be not larger than one-third of the width of the plank.
- In double tee planks, no openings should be placed at ribs. Otherwise, supplemental supports or appropriate reinforcement should be provided.

2.3.4 Structural types

(i) Screeds

Screed is typically a cementitious material with a 1:3-5 ratio of cement to sharp sand, which is placed at the top of a slab to form an appropriate surface for certain conditions. However, some manufacturers provide pumpable flowing screeds, which are anhydrite compounds and are based on a calcium sulphate binder. They are quicker to apply than traditional sand and cement screeds. If reinforcement is required, this

may either be in the form of a fine metal mesh, fine glass mesh, or fibres, which are normally made of polypropylene.

Screeds may be installed onto both cast-in-situ or precast slabs. They may be directly bonded to a slab or laid unbonded onto a suitable damp-proof membrane if it is placed over the slab. To prevent the separation of a bonded screed from its substrate, it should be thin, not more than 50 mm. On the contrary, to prevent the lifting and curling of an unbonded screed, it should be thick, normally 70 mm or 100 mm if curling must be avoided.

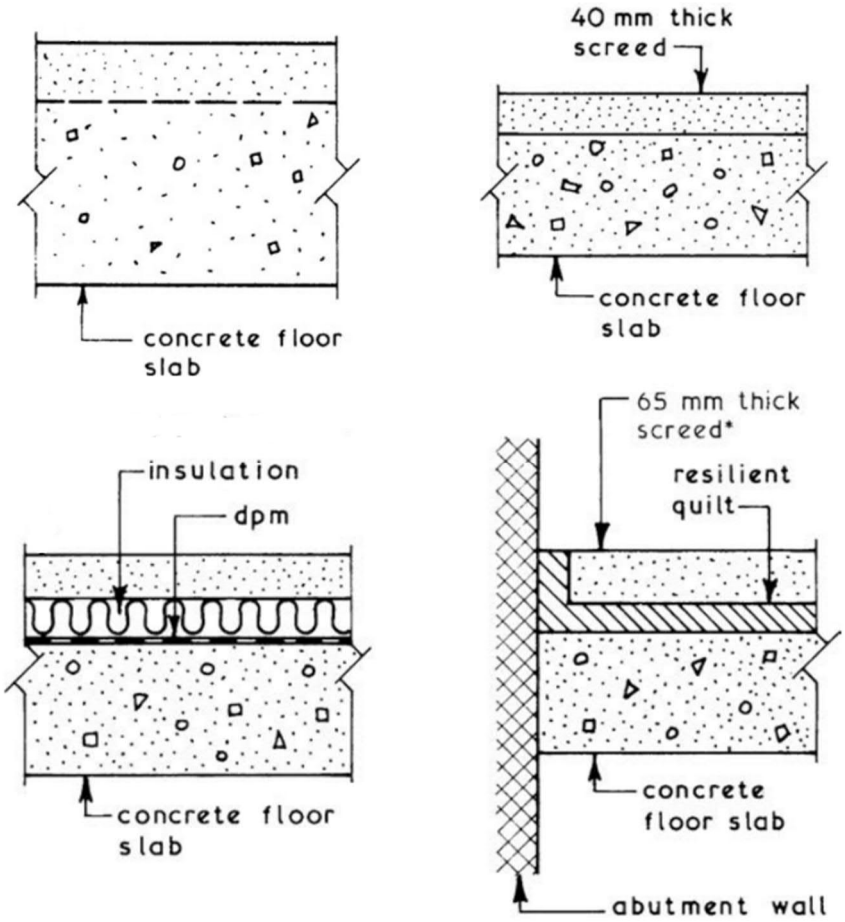

Figure 49. Screed types: bonded (top left); separated (top right); unbonded (bottom left); floating (bottom right); (Chudley & Greeno, 2014, pp. 768-769)

Also, screeds may be applied as a floating finish laid over a layer of rigid acoustic or thermal insulation. This is the type of unbonded screeds. Alternatively, levelling screeds may be chosen to provide falls, finishing zones for different types of flooring, or to accommodate cast-in water pipes for underfloor heating. (The Concrete Centre, n.d.)

(ii) Ground floors

Main functions of ground floors (Chudley & Greeno, 2014, p. 758):

a) Provide a surface that is sufficiently strong to bear design loads.
b) Prevent the penetration of water and water vapour into the interior of a building.
c) Provide appropriate resistance to heat loss throughout the floor.
d) Provide a correct type of structure to achieve a chosen finish.
e) In Finland, one of the main functions is also to prevent any radon gas penetrations into the interior.

Generally, solid ground floors consist of three components:

a) Hardcore – a layer of filling material, such as gravel, crushed rock, concrete or brick rubble, or other similar material. It is used to make up the topsoil removals, fill irregularities in excavations, raise the level of ground floors, and create a reliable base for a load-bearing stone or concrete bed evenly distributing loads to the ground. The upper surface should be blinded with fine grade material, such as sand. Sand blinding fills gaps in the hardcore, which prevents the wastage of concrete, and makes a smooth surface for damp-proof membrane if it is placed beneath a concrete bed.
b) Damp-proof membrane – a water-impermeable layer of heavy-duty polythene or similar covering that prevents moisture penetration into the building interior. In Finland, damp-proof membranes are not commonly used in ground floor structures.
c) Concrete bed – a load-bearing layer of cast-in-situ concrete to which screeds or finishes may be attached. (Chudley & Greeno, 2014, p. 759)

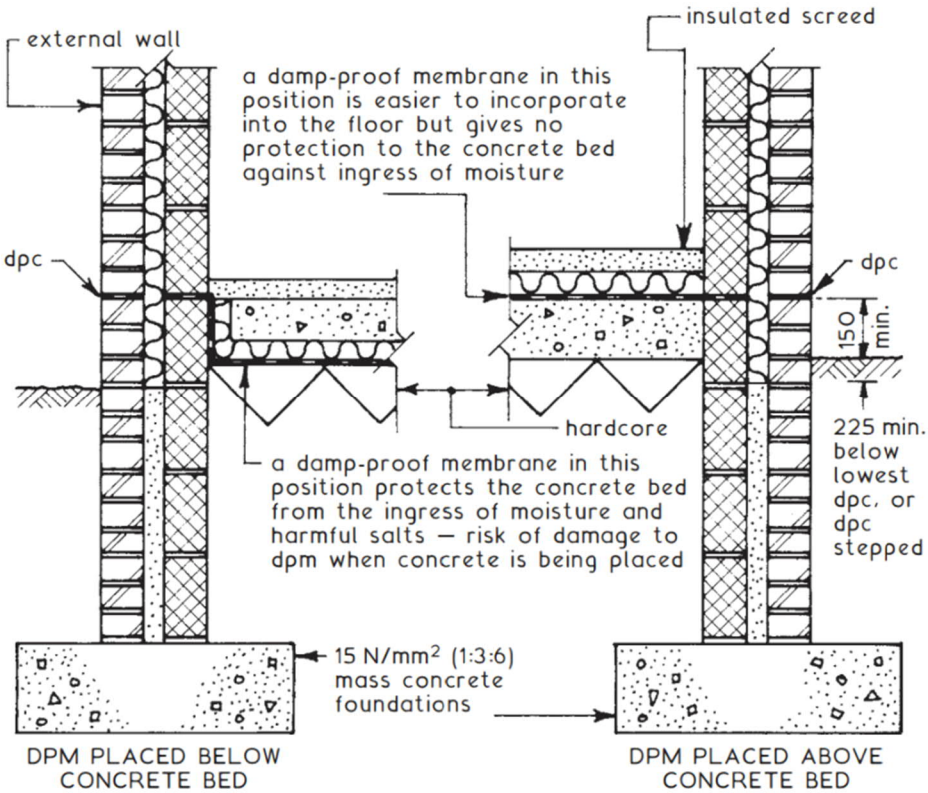

Figure 50. Domestic ground floors (Chudley & Greeno, 2014, p. 759)

Beneath warm rooms, thermal insulation is normally added into the floor structure, too. Such insulation should be rigid, for example, foam boards, in order to carry loads coming from a concrete bed. Also, a screed is often placed in the top of ground floors, and some finishes, such as floor-boards, may form their toppings.

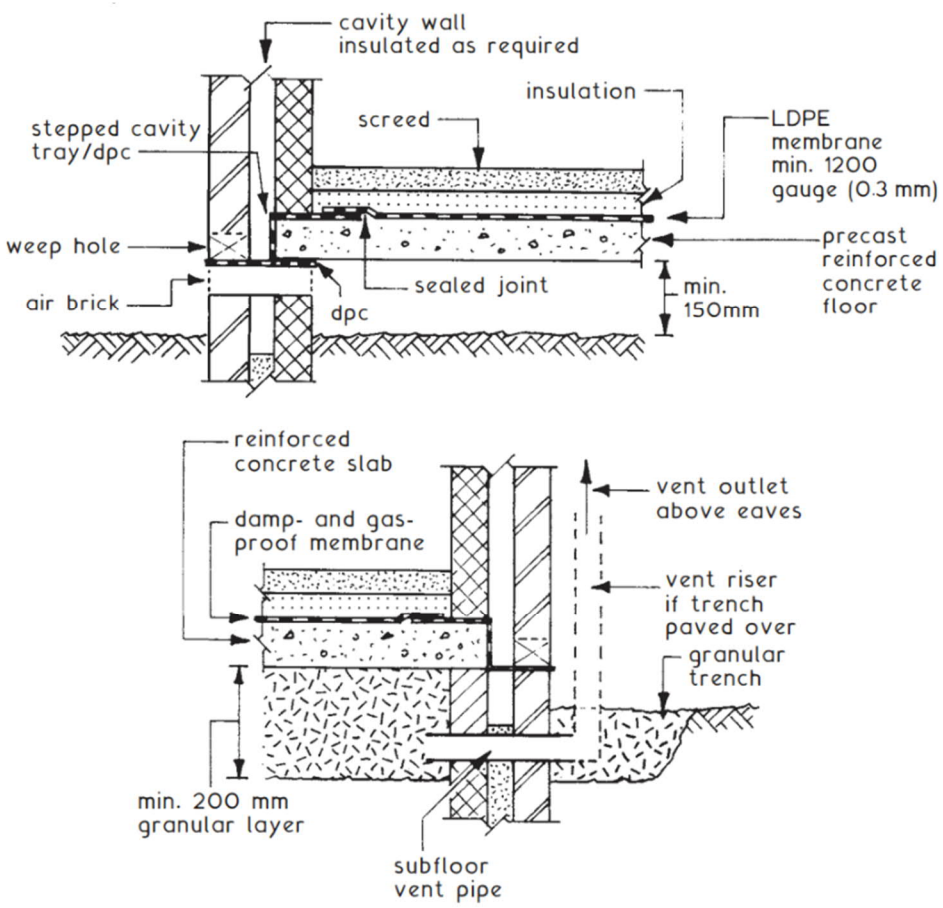

Figure 51. Suspended ground floor (top); ground floor with the ventilation path (bottom); (Chudley & Greeno, 2014, p. 416)

To prevent the penetration of subterranean gases dangerous for a human, such as radon or methane, ventilation paths leading from a hardcore layer to the exterior of a building should be provided. In suspended ground floors, there is no need for ventilation paths inside the hardcore since the space beneath the floors serves for that purpose. The example may be a beam and block floor, which is always constructed with a gap about 150 mm beneath it. The top surface of soil is then treated with a weed killer. In Finland, such underfloor spaces are usually made with a height more than 800 mm.

(iii) Intermediate floors

(iii.i) Sound proofing

Intermediate floors are mostly not in the need of any kind of thermal or water insulation excluding several cases, where there is a possibility of

the temperature difference in two neighboring rooms, for example, in saunas. However, the problem of sound proofing occurs.

Sounds may be defined as either airborne or impact depending on their source. Airborne sounds appear by emitted sound-waves, while impact sounds are created by direct contact vibrations. The airborne resistance of floors mostly depends on the mass of a floor structure. The impact resistance usually depends on the softness of a covering or on a resilient layer if such is provided. A resilient layer may be made, for example, of pre-compressed expanded polystyrene (EPS) or polyethylene foam. (Chudley & Greeno, 2014, p. 795)

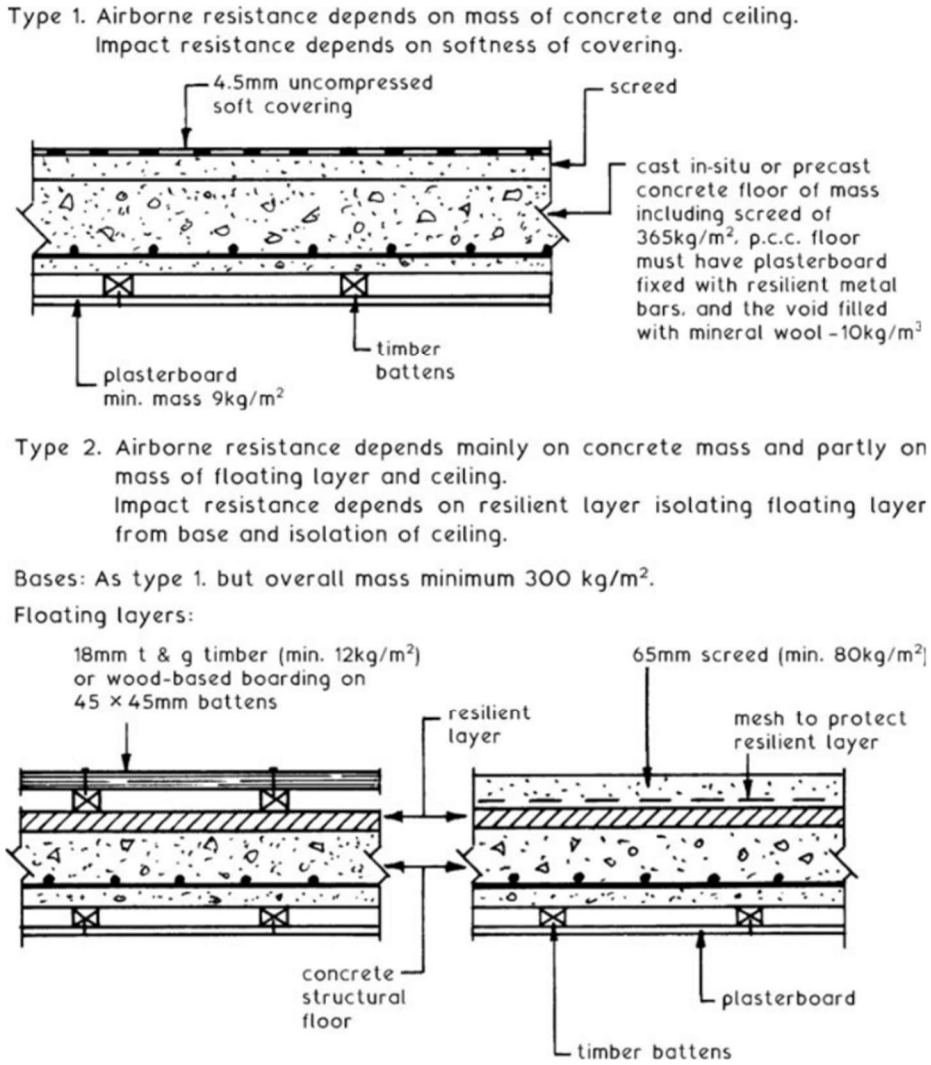

Figure 52. Examples of intermediate floor structures (Chudley & Greeno, 2014, p. 799)

(iii.ii) Raised access floors

Sometimes raised access floors increasing the floor height are used. This system is the combination of adjustable floor pedestals supporting various types of decking, for example, sheet plywood or particleboard.

Such floors are popular in office buildings, where a great number of cables and other equipment should be installed. (Chudley & Greeno, 2014, p. 794)

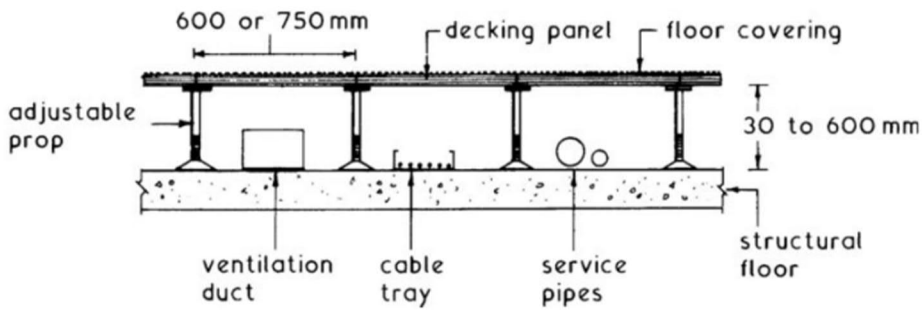

Figure 53. Raised access floor structure (Chudley & Greeno, 2014, p. 794)

(iv) Wet rooms

Wet rooms, for example, bathrooms, saunas, or laundry rooms, are always quite challenging places for the floor design since they require several crucial drainage elements, such as pipes and drainage grills, which must be installed inside floors to ensure that they work properly and water does not leak out of allowed boundaries. In concrete floors, such elements are usually placed onto the top of slabs prior to a structural topping in order to hide them with a concrete cover and create a gradient.

The gradient is one of the most important aspects of wet room floors, which is vital to guide water flows efficiently. It may be achieved by casting screeds laid to fall, which allows for the height of the drain. The minimum recommended fall is 12 mm/m.

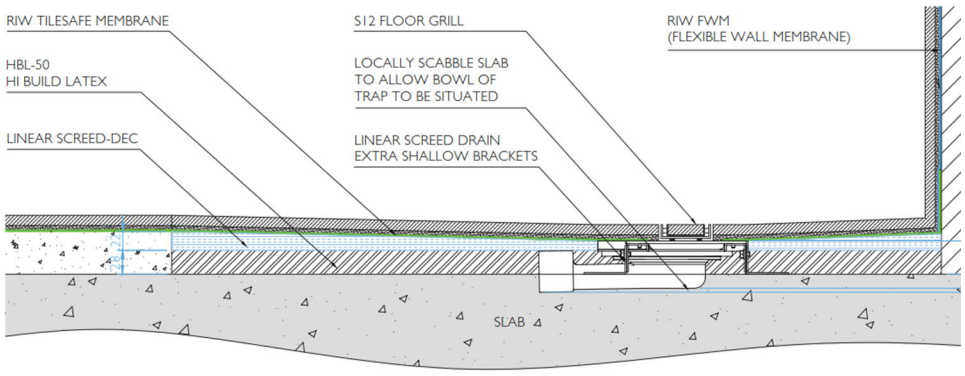

Figure 54. Example of a wet room floor structure (Wetrooms UK Ltd, n.d.)

Also, waterproofing must be provided, and it is normally made in the form of an impermeable floor membrane placed next to a sloped topping across the whole area of a wet room or at least 1 m beyond the boundaries of the areas contacting with water. The membrane should be joined with wall membranes to avoid water penetration throughout

corners and is often installed together with a tile finishing laid onto a solid bed with the use of an adhesive. (Wetrooms UK Ltd, n.d.)

(v) Roofs

The main function of roofs is to avoid any water penetration into the interior and provide sufficient thermal resistance. However, problems may occur when a structure incorporates an impermeable component, for example, waterproofing, on the cold side of the dew point that vapour cannot penetrate. Therefore, to prevent such problems as the accumulation of water within the structure, frost damage, water dripping back into the interior space, reduced insulation capacity of thermal insulants, and other, vapour must be prevented from entering a structure.

Also, roofs are usually designed to carry loads from wind and snow and may be used as warehouses for machinery or even as gardens, for example, green roofs. Thus, they must be capable to carry these loads as well. (The Finnish Roofing Association, n.d.)

A typical concrete flat roof, or, more accurately, a low-slope roof, is consisted of a load-bearing cast-in-situ or precast decking, vapour control layer (VCL), thermal insulation, and waterproofing membrane. Most roof membranes contain three elements: waterproofing, reinforcement, and surfacing. In built-up and modified bitumen roofing, the waterproofing agent is synthetic rubber or plastic. Reinforcement, such as organic or glass fiber felts or polyester fabrics, hold the waterproofing agent in place and provide tensile strength. Surfacing materials, such as aggregate or mineral granules, protect the membrane from sunlight, hail, and traffic. Some surfacing materials also provide fire resistance or reflectivity.

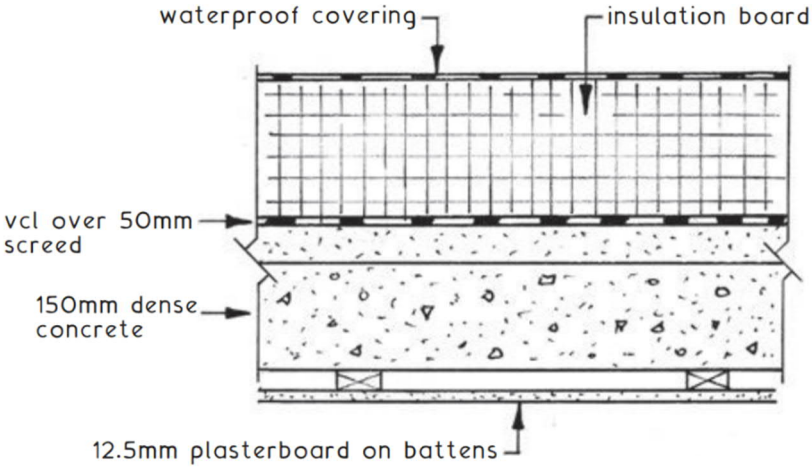

Figure 55. Typical concrete roof structure (Chudley & Greeno, 2014, p. 571)

The most common materials for roofing are as follows: tile, metal, built-up, ethylene propylene diene monomer (EPDM), modified bitumen, chlorosulfonated polyethylene (CSPE), polyvinyl chloride (PVC),

chlorinated polyethylene (CPE), and polyurethane foam (PUF). Tile and metal roofing are used for steep roofs. Flat roofs are almost always covered with built-up roofing or a single-ply membrane. (The Aberdeen Group, 1988)

2.4 Modeling of slabs in Tekla Structures

This section defines the basic concept of the Tekla Structures modeling program and describes standard tools used for the managing and modeling of reinforced concrete slabs. Such aspects as the Tekla Structures program, model objects, commands, components, assemblies, cast units, pour units, slab and reinforcement modeling tools are described.

2.4.1 Tekla Structures

Tekla Structures serves for the aid in the drawing production, construction management, and structural design of buildings. The work in the program is based on the creation of a 3D building model and further use of it. Although Tekla Structures requires a deep knowledge and broad experience, it is still possible for new users to work much more efficiently and conveniently compared to other methods.

To get the best advantage of the program, the working process in Tekla Structures should to be planned beforehand, starting from the model creation till any possible revisions in the drawings. The working process may be divided into four main stages: modeling, analysis, drawing, and management. The modeling is based on the work with various types of model objects, commands, and tools in order to create the physical model of a real building or structure. The analysis is not provided entirely, but Tekla Structures helps to create and export an analysis model built of a physical model to several analysis applications for a further analysis. Drawings, in Tekla Structures, may be called as windows with 2D views representing a model. Therefore, all changes applied to the model objects affect the drawings as well, and this should be kept in mind, while modeling. However, in drawings, a user is permitted to change only the object representation and is not able to delete or change the geometry or location of objects. This makes drawings always up-to-date. Construction management in Tekla Structures consists in a possibility to plan, analyse, and control a project during all construction phases. The program helps to:

- estimate the quantities and costs of materials and forecast schedules at the preconstruction phase
- improve collaboration between project parties by integration with standard industry planning or other applications
- understand and analyse by the visualization
- coordinate and manage operations and logistics at site

2.4.2 Objects

Generally, a model object is the representation of a real building object that will exist in the future. However, it is also possible to use temporary objects, called modeling aids, which are relevant only during the modeling process. Objects may be either created in a model or imported into it. In prospect, once model objects are created, they may be combined into bigger entities, such as assemblies for steel parts and cast units or pour units for concrete parts. (Trimble Solutions Corporation, 2018, pp. 227-228)

(i) Modeling objects in Tekla Structures

a) Parts and items. The term part refers to the basic building objects that can be modeled and detailed further. They are the building blocks of a physical model. Every part has properties that define it, such as material, profile, and location. The special type of parts is items. Items are used to model objects that are difficult to model by using basic Tekla Structures parts and commands, such as cutting.
b) Bolts and welds. Generally, bolts and welds serve to join steel parts together and turn them into assemblies. Assemblies and their main parts are automatically defined when single workshop welds or bolts are created or when automatic connections that create workshop welds or bolts are applied.
c) Reinforcement and embeds. Reinforcement may be crated as single rebars, rebar groups, sets of rebars, meshes, shape catalogue rebars, pre-stressed strands, or reinforcement splices. Mostly, the combination of these various reinforcement tools is required to achieve a desired result. Alternatively, either Tekla Structures or custom reinforcement components may be used. Such reinforcement components are adaptive, attached to a concrete part, and updated automatically if the dimensions of the reinforced part are changed.
d) Surface treatment and surfaces. Surface treatment for concrete parts includes flat finishes, surface mixes, and tiles. Surface treatment for steel parts includes, for example, fire-proofing and unpainted areas. If the shape or size of a part is changed, Tekla Structures automatically modifies surface treatment objects to fit the part.
e) Cuts, fittings, holes, and chamfers. Cuts are used to shape a part, while fittings are used to extend or shorten parts only inside a component. Cuts and fittings should not be used to otherwise change the length of a part in a model. Cuts may be created with a line, polygon, or another part. Fittings are always created with the Fit part end command picking two points of a cutting line. Holes may be created by using the Bolt command with no elements selected in the Bolt properties since Tekla Structures uses the same command for creating bolts, studs, and holes. Chamfers are modeling details that can be used to refine the shape of parts for aesthetic, practical, and manufacturing reasons. In Tekla Structures, it is possible to chamfer part corners and part edges.

f) Pour breaks. Pour breaks are represented in a model as a thin plane or line and is used to split pour objects into smaller pour objects.
g) Loads. When loads are created, they compose a load model that in collaboration with an analysis model, which is made up from a physical model, may be used for design and the analysis of structural behavior and load bearing. (Trimble Solutions Corporation, 2018)

(ii) Modeling aids in Tekla Structures

a) Grids and grid lines. In Tekla Structures, grids are shown with dash-and-dot lines on a view plane and represent a three-dimensional complex of horizontal and vertical planes. They serve as an aid in locating objects in a model.
b) Construction objects and points. Construction objects, such as planes, lines, circles, and points, do not appear in drawings and may help to place other objects in the model. For example, they allow for the creation of snapping points at the intersections of construction lines and circles, or they may be made magnetic in a way that the planes and handles of other objects are bounded to them following all the movements.
c) Reference models. Reference models are files loaded each time when a Tekla Structures model is opened. They are not saved in a current model folder but linked to a containing folder. In Tekla Structures, reference models may be created both in the form of a 3D model, for example, architectural or plant design model, and 2D drawings imported and used as a layout. It is possible to snap to the reference model, which allows to follow the actual structure geometry and serves as a great aid in the process of modeling. (Trimble Solutions Corporation, 2018)

2.4.3 Commands and components

Objects may be created in two ways: with commands or with components. Commands in Tekla Structures are presented at the ribbon tabs and bars in the form of icons, which may be selected by a user. They are usually related to individual objects, such as were listed previously. Also, commands serve for various tasks. In fact, any action in Tekla Structures may proceed by a command. For example, the icons on the View tab allow for zooming in and out a model, and the snap switches at the Snapping toolbar allow for the control of the object positioning in a model. (Trimble Solutions Corporation, 2018)

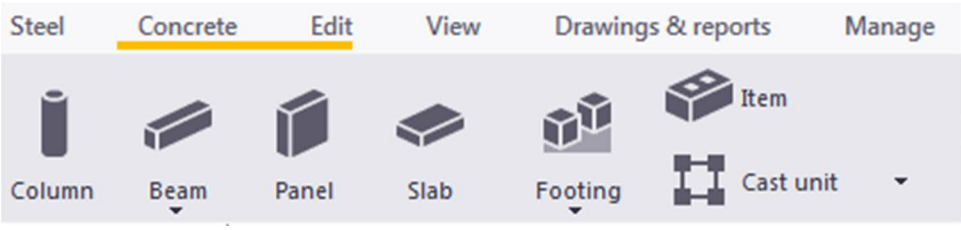

Figure 56. Ribbon icons (Tekla Structures snapshot)

On the other hand, components are tools serving to connect objects in a model. They automate tasks and group objects in a way, so they are treated as a single unit. Tekla Structures contains a wide range of predefined system components by default. However, it is also possible to create custom components that may be used in the same way as system components. All components are stored in the Applications & components catalog.

There are three types of system components:

a) Connection components connect two or more parts and create all required objects such as cuts, fittings, parts, bolts, and welds. For example, end plates, clip angles, and bolted gussets are connections.
b) Detail components add a detail or reinforcement to a main part. One detail may be connected only to one part. For example, stiffeners, base plates, and lifting hooks are steel details, and beam reinforcement and pad footing reinforcement are concrete details.
c) Detailing components automatically create and assemble parts to build a structure, but do not connect the structure to existing parts. For example, stairs, frames, and towers are detailing components. (Trimble Solutions Corporation, 2018, pp. 651-652)

2.4.4 Assemblies, cast units, and pour units

(i) Assemblies

Assemblies are entities consisted of steel parts combined together either by a creation of connections, such as welds, bolted connections, or connection components, or manually with the help of the Make into Assembly command. The main and secondary parts of an assembly or the assembly hierarchy are automatically determined by the selection order when the assembly is created. By default, each steel part is considered as a separate assembly. Thus, both steel parts and existing assemblies may be turned into a new assembly.

Furthermore, the sub-assemblies of steel parts, or other objects that are already in an assembly, may be created with the Make into Sub-Assembly command. Otherwise, sub-assemblies may be connected to an existing assembly with the Add as Sub-assembly command or with the selection of the As sub-assembly option from the list in the properties of a weld or

bolt connection. In Tekla Structure, it is possible to work on any hierarchy level of a nested assembly, from single parts and bolts, through the basic and sub-assemblies, up to the highest level of the nested assembly. (Trimble Solutions Corporation, 2018, pp. 368-377)

(ii) Cast units

A cast unit is a similar to the assembly entity merged of a number of concrete parts with the use of the Create cast unit command. In the same manner, each concrete part is considered to be a separate cast unit by default. However, there are two types of cast units in Tekla Structures, such as Cast in place and Precast. Therefore, precast and cast-in-place parts cannot be mixed within one cast unit. Various objects may be added to cast units either by adding an object as a secondary part with the Add to cast unit command or by adding an object as a sub-assembly with the Add as sub-assembly command.

The casting direction of parts is a very important feature that should be used accurately since it affects the numbering of parts and their drawings. By default, the casting direction of parts is undefined, but it may be set manually by choosing the top face of a part with the Set Top in Form Face command. The top-in-form face is then displayed in the front view of a drawing. However, if the casting direction of the same parts differs by their modeling direction, they get different position numbers, and the orientations of the standard system views of the drawings are different, too. (Trimble Solutions Corporation, 2018, pp. 377-383)

(iii) Pour units

In Tekla Structures, a pour is a group of pour objects that is poured at one go. A pour object is a building object that consists of one or more cast-in-place concrete parts, or parts of them. Cast-in-place concrete parts are merged into one pour object if they have the same material grade and they touch each other. They also need to be in the same pour phase to be merged. Pour objects are visible in pour views. If the geometry of a pour object needs to be changed, it may be done only by modifying parts included into the pour object or by the creation of a pour break. With a pour break a pour object may be split into smaller pour objects.

A pour unit is a management unit for cast-in-place concrete that consists of a pour object and all related reinforcement, embeds, and other objects that need to be in place before concrete may be poured on a building site. For each pour object in a model, there is a corresponding pour unit to which the pour object belongs. Other objects may be automatically added to pour units with the Calculate pour units command. Alternatively, objects may be added manually with the Add to pour unit command. One model object can be included only in one pour unit at a time. (Trimble Solutions Corporation, 2018, pp. 383-408)

2.4.5 Slab tools

(i) Slab

The most common way to model a concrete solid slab is to use the Slab tool presented on the Concrete tab. This tool allows for the modeling of slabs by picking the corner points. It uses the current properties, such as the thickness and concrete grade. The slab properties may be modified at any time, before or after the slab is created. (Trimble Solutions Corporation, 2018, pp. 282-285)

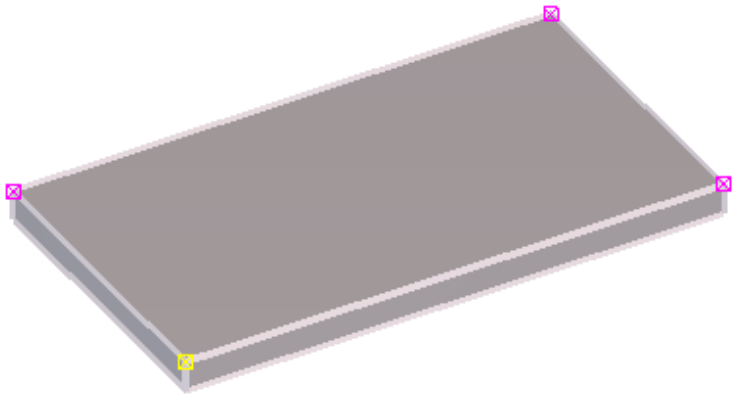

Figure 57. Concrete slab with highlighted handles (Trimble Solutions Corporation, 2018, p. 228)

(ii) Apply and Modify

To display the dialog box with current properties, a user may double click or hold the Shift key + click on the Slab icon on the Concrete tab. In order to apply the properties selected in the dialog box to all slabs that will be created, the user should click on the Apply button. To display the dialog box of a created slab, the user may double click on the slab or select the slab and press the Alt + Enter keys. In order to apply the properties modified in the dialog box to all selected slabs, the user should click on the Modify button. The modified properties then become new current properties until a next change and will be applied to all slabs that will be created.

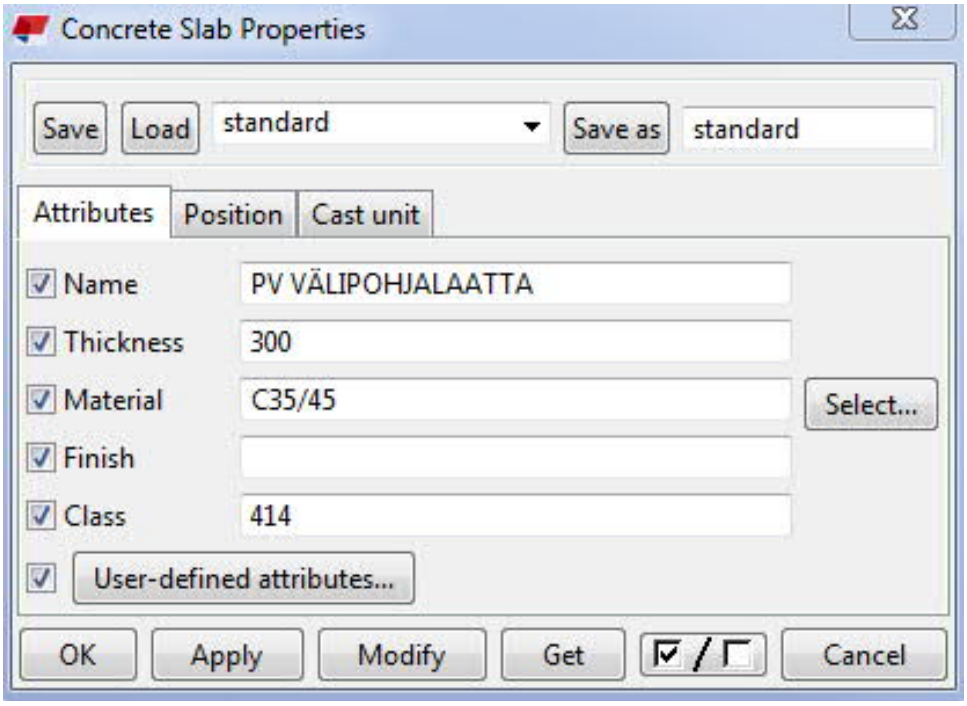

Figure 58. Concrete slab property dialog box (Tekla Structures snapshot)

(iii) Handles

Tekla Structures indicates the direction of parts with handles. In slabs, the handles are the corner points picked when the slabs were created. Once a part is selected, its handles are highlighted. The handle of the first endpoint is yellow, while the rest handles are magenta. If the Direct modification mode is on, Tekla Structures also displays direct modification handles for the reference points, corners, segments, and segment midpoints of the selected parts. These handles are blue and may be transformed into ordinary handles.

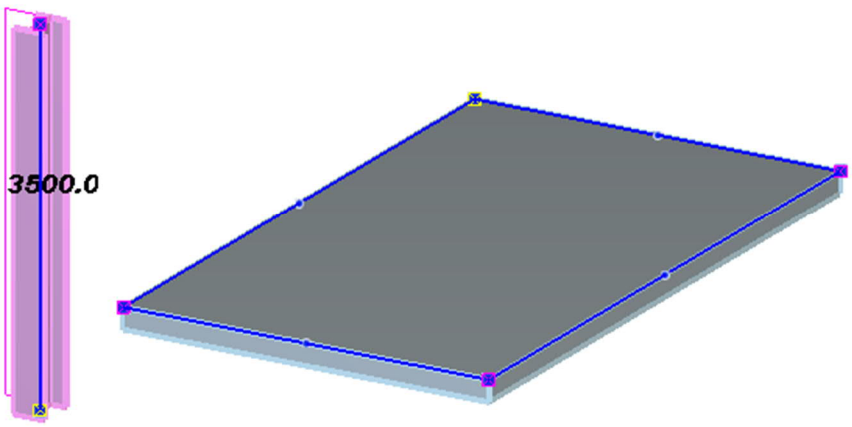

Figure 59. Direct modification handles (Trimble Solutions Corporation, 2018, p. 229)

Handles may be moved, modified, and deleted. Thus, to achieve more complicated shapes, a user may modify the properties of the slab handles. The handles may be modified in the same way as the slab properties. To display the dialog box of the handle properties, a user may double click on the handle or select the handle and press the Alt + Enter keys. To select several handles, the user should select the slab and then drag the mouse from left to right holding down the Alt key. The dialog box of slab handles is called Chamfer Properties since slabs may be chamfered with the help of the handles. Also, the handles allow for the adjusting of the slab thickness at the handle point with two values representing an offset from the top and bottom planes of the slab along the Z-axis. (Trimble Solutions Corporation, 2018, pp. 228-230)

(iv) Floor layout

Floor layout is a component that works very similarly as the Slab tool. The component may be found on the Concrete tab in the Slab drop-down list. When the component is launched, it asks a user to pick the corner points to model a floor using its current properties. Although it may create simple solid slabs, it is mostly developed to model floors built of precast filigree and hollow core slabs. With the use of this component it is possible to create complicated floors with non-rectangular shapes that contain one or more openings splitting slabs into many pieces and when the slab widths are not constant on the whole floor area. The floors may contain several layers, such as precast slabs, insulation, and cast-in-place topping. However, there is a limitation for floors with several planes. The edges can be offset from the plane only to warp the floor, not to make floors that have several planes. Thus, to create precast floors, where the layout is not in one plane, multiple floor layout components must be used. The floor layout component may be modified with the help of the direct modification. Once the component is selected and the direct modification mode is on, the direct modification toolbar appears. Then, one of the appropriate commands from the toolbar may be used to modify the component. (Tekla User Assistance, n.d.)

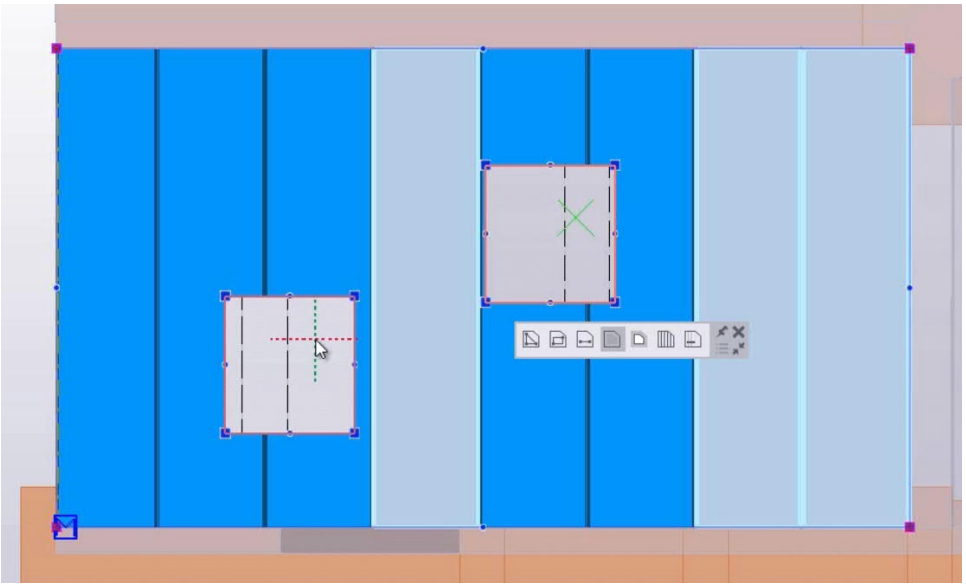

Figure 60. Floor layout component in the direct modification mode (Tekla User Assistance, n.d.)

2.4.6 Reinforcement tools

(i) Single bar and group of bars

Reinforcement may be modeled as single bars or bar groups consisted of the row of identical or similar rebars. The Bar and Bar group tools are presented on the Concrete tab in the Rebar drop-down list. Once launched, both these tools ask a user to select a part to reinforce and pick the bar start point and shape. However, the bar group also asks to pick the range of a group. In Tekla Structures it is possible to model curved, circular, tapered, and spiral bar groups. These single bars and bar groups may be modified either with the direct modification or in the property dialog box. (Trimble Solutions Corporation, 2018, pp. 432-448)

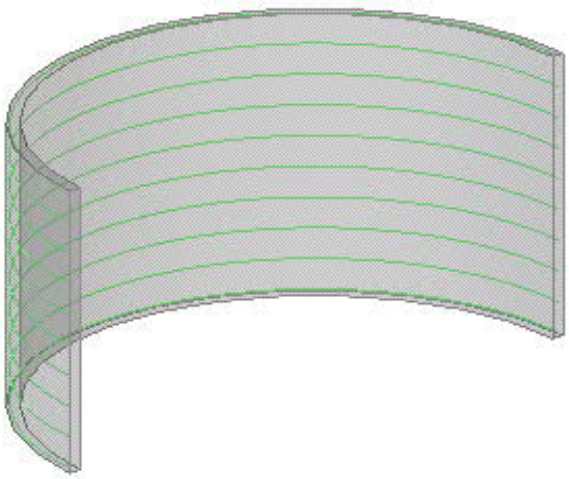

Figure 61. Curved reinforcing bar group (Trimble Solutions Corporation, 2018, p. 443)

(ii) Mesh

A reinforcement mesh consists of two perpendicular bar groups. The Mesh tool may be found on the Concrete tab in the Rebar drop-down list. Once launched, the tool asks a user to select a part to reinforce and pick the bar start point and a point to indicate the direction of the longitudinal bars. The mesh is always created parallel to the work plane, to the left of the points the user had picked. Tekla Structures treats mesh bars as one unit but distinguishes the main and crossing bars. The mesh can be rectangular, polygonal, or bent, and it is possible to create a customized reinforcement mesh. Meshes may be modified either with the direct modification or in the property dialog box. (Trimble Solutions Corporation, 2018, pp. 448-454)

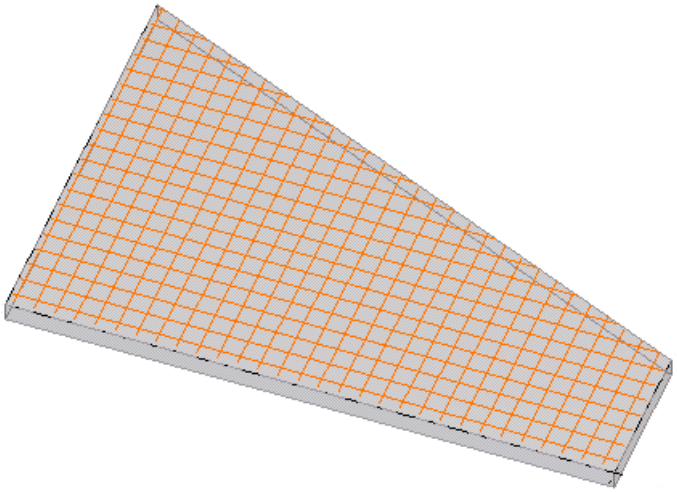

Figure 62. Polygonal reinforcement mesh (Trimble Solutions Corporation, 2018, p. 451)

(iii) Strand pattern

In Tekla Structures, straight and deflected pre-stressing strands may be created for concrete parts. The Strand pattern tool is presented on the Concrete tab in the Rebar drop-down list. It is advisable to outline the position of strands before modeling, for example, with the help of Points that may be found on the Edit tab. Once launched, the tool asks a user to pick points defining the position of strands, and then two points to define the length of the strands. The strands may be modified only in the property dialog box, where it is also possible to make the strands locally or entirely debonded. (Trimble Solutions Corporation, 2018, p. 454)

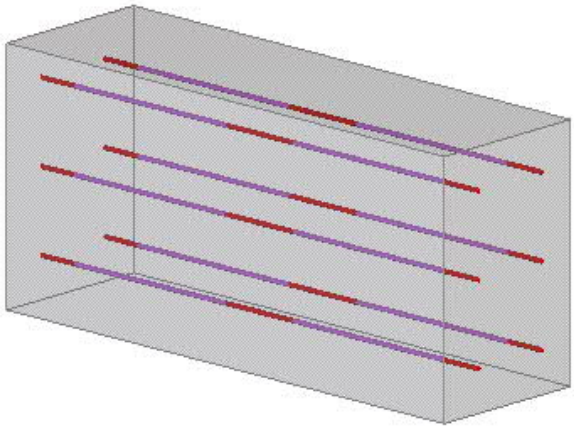

Figure 63. Debond reinforcement strands (Trimble Solutions Corporation, 2018, p. 456)

(iv) Splice

Reinforcing bars or bar groups may be joined together with reinforcement splices. The Splice tool is also presented on the Concrete tab in the Rebar drop-down list. The tool creates a splice for two selected reinforcing bars or bar groups. It should be noted that in Tekla Structures adjacent rebars must not overlap in order to achieve the successful splicing. Splices may be modified only in the property dialog box. (Trimble Solutions Corporation, 2018, pp. 457-458)

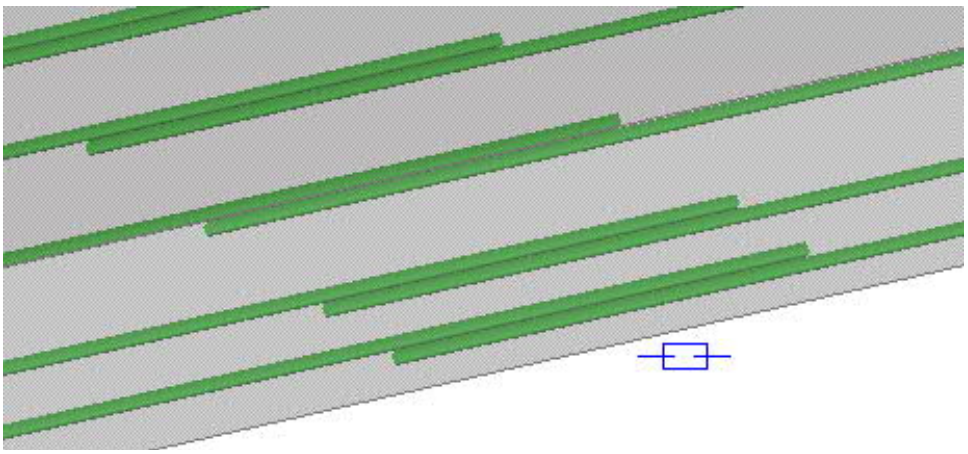

Figure 64. Reinforcement splice (Trimble Solutions Corporation, 2018, p. 457)

(v) Rebar sets

Rebar sets are very flexible tools for modeling of reinforcing bars for various areas in concrete parts or pour units. These tools are presented on the Concrete tab in the Rebar set drop-down list. There are several types of rebar sets: longitudinal bars, crossing bars, planar bars, and bars by point input. Longitudinal, crossing, and planar rebar sets are attached and adaptive to a concrete part or pour object, while rebar sets by point input may be created even outside concrete objects. The leg faces of

rebar sets are planes that define where the reinforcing bar legs are created. Tekla Structures creates leg faces at the reinforced faces of concrete parts or pour objects, or according to the points a user picks. Each rebar set has at least one guideline that defines the distribution direction of the bars. The spacing of the bars is also measured along the guideline. The guideline may be a line or polyline that may have corner chamfers. Tekla Structures automatically creates three guidelines for longitudinal rebar sets in curved beams, polybeams, strip footings, and wall panels. It is also possible to create up to two secondary guidelines manually to define different spacings along a rebar set, for example. Rebar sets may be modified with the direct modification by using the direct modification tool bar. To modify a rebar set only at certain locations, local property modifiers, end detail modifiers, and splitters that are available at the direct modification toolbar, may be used. (Trimble Solutions Corporation, 2018, pp. 409-432)

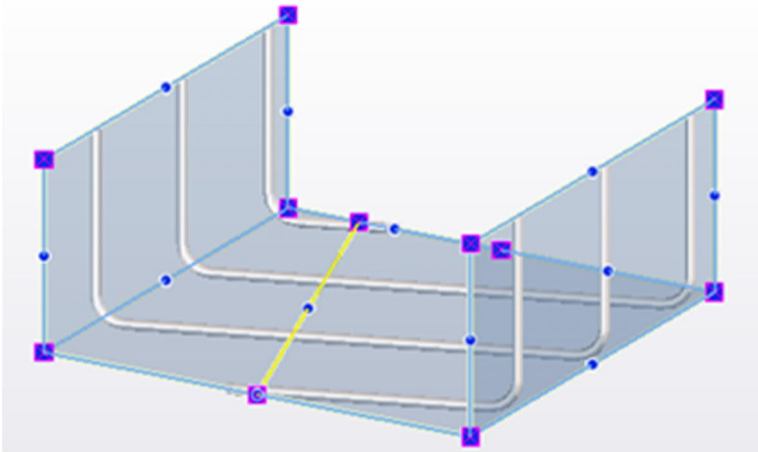

Figure 65. Rebar set: leg faces (gray planes) and the guideline (yellow line); (Trimble Solutions Corporation, 2018, p. 410)

(vi) Rebar shape catalogue and Rebar shape placing tool

Reinforcing bar groups and rebar sets may be created by using a predefined reinforcement shape. Reinforcing bars may be created with shapes from the Rebar shape catalogue, while, to create rebar sets, the Rebar shape placing tool should be used. Predefined shapes in both sources are based on shapes that have been defined in the Rebar shape manager. However, the rebar shape catalog does not work with tapered reinforcing bar groups, and the rebar shape placing tool does not work with round or spiral bar shapes, or in tapered variable cross sections. (Trimble Solutions Corporation, 2018, pp. 419-426; 435-442)

(vii) Tekla Open API and other reinforcement tools

Tekla Structures is very flexible for custom components, plugins, and applications, especially with the possibility of Tekla Open API (Application Programming Interface), also known as the .NET API, to develop

complicated applications that are able to integrate and communicate within the Tekla modeling environment and provides an interface for third party applications to interact with model and drawing objects in Tekla Structures. With Tekla Partners Program, such applications and integrations later may be marketed and distributed by their developers. All free custom integrations not included into the default Tekla Structures environment are available for private users and may be downloaded from the Tekla Warehouse.

However, there are also other standard tools for slabs created by the Tekla Structures developers that should be highlighted and may be combined with variable custom integrations (Tekla User Assistance, n.d.):

- Detailing manager
- Mesh Bars
- Mesh Bars by Area
- Slab bars (18)
- Slab Reinforcement Tool
- Hole reinforcement for slabs and walls (84)
- Hole creation and reinforcement (85)
- Braced girder (88)
- Braced girder (89)
- Reinforcement mesh array in area (89)
- Reinforcement mesh array (91)
- Multiple Wire Size Mesh
- Embedded anchors (8)
- Embed (1008)
- Border rebar (92)
- Border rebar for single edge (93)
- Edge and Corner Reinforcement (62)

3 LUJA-SUPERLAATTA

Luja-Superlaatta is an up to a 3 m wide and 270 mm thick prestressed concrete slab that is suitable for multilevel residential, commercial, and industrial buildings, and multilevel car parks. With a structure, similar to the combination of a hollow core and waffle slab, Luja-Superlaatta has a wide range of benefits compared to other slab technologies (see section 2.2). It is an ideal solution for intermediate floors as well as for warm rooms and wet rooms. The slab is also used for roofs and ground floors, but typically it is the 220 mm thick version.

The original slab was introduced in 2012 by the Danish company called Abeo A/S. The commercialisation was based on a new concrete technology invented in 2010 in the Technical University of Denmark in Copenhagen. Two revolutionary and patented concrete technologies "Super-Light Structures" and "Pearl-Chain Reinforcement" were combined resulting in a new product named Super-Light Concrete Deck (The SL-Deck). Later, Lujabetoni Oy became the licensed manufacturer of that product in Finland, slightly changed the slab geometry and renamed it to Luja-Superlaatta according to the Finnish market. Currently, Luja-Superlaatta is delivered across the whole of Finland from the factory located in Siilinjärvi, Finland, but it is also planned to open a new production facility in Järvenpää, Finland in 2019. (Abeo A/S, n.d.; Lujabetoni Oy, 2018)

This chapter is based on the information collected from Lujabetoni Oy and internet sources. First, general data about the Luja-Superlaatta slab is defined. Then, the most common details are presented. Finally, the design methods and principles are described.

3.1 General information

The aim of this section is to study the general features of Luja-Superlaatta. Such aspects as the specification, characteristics, and production method are considered throughout the section.

3.1.1 Specification

(i) Geometry

The standard version of Luja-Superlaatta is a rectangular concrete slab. The top and bottom surfaces are both made with a smooth solid finish. The ends are vertical and may be modified to be skewed half-V-shaped in order to make the placement of reinforcing bars between slabs easier. The slab may be constructed either as precast, cast-in-situ, or hybrid. The nominal width of the slab is 3000 mm, but the actual width is 2996 mm. The width may be reduced without any constrains and other dimensional

changes, but normally 1 m is the minimum allowable width of the slab. The maximum span is up to 12 m depending on a load case. In slabs with wet room zones, the span is usually 8 to 9 m. Precast planks may be delivered to a site with a large variety of shapes with curved or skewed sides and ends, or with a special shape to suit the final geometry of a building. (Lujabetoni Oy, 2018)

Figure 66. Luja-Superlaatta/SL-Deck (Lujabetoni Oy, n.d.)

(ii) Structure

The structure of Luja-Superlaatta is the combination of the lightweight concrete decking with a density of 900 kg/m3 and the self-compacting concrete (SCC) topping (see section 2.1.2(ii)) with a density of 2400 kg/m3. However, the slab may be produced with a porous structure providing a sound-dampening effect on the room below. The decking is made with a special curved geometry compacted of a set of LECA (light expanded clay aggregate) blocks of bell-shaped profile arranged on a 10 mm thick mortar layer, which is cast onto a flat surface in order to achieve a smooth bottom finish that may be used as a soffit. Such a special shape allows for the placing of reinforcing bars among the blocks in both longitudinal and transverse directions and also serves as appropriate formwork needed for the self-compacting concrete to be cast on the top of it in the form of a ribbed slab. At each end, a minimum of 250 mm of Luja-Superlaatta is cast entirely with solid concrete in order to secure the shear resistance near supports. The shear resistance of SL-270 in such zones is normally greater than the maximum shear resistance of a 370 mm thick hollow core slab. However, the shear capacity should always be checked for each individual slab. (Abeo A/S, 2014)

Figure 67. Luja-Superlaatta/SL-Deck structure (Abeo A/S, n.d.)

(iii) LECA-blocks

In slabs of simple rectangular shape and without any openings or built-in parts, LECA-blocks are evenly distributed across the whole area of the slabs by the exception of the solid ends (see Appendix 2). However, in every project there are usually such specific features of a floor layout that require to leave out the blocks when they collide with built-in parts, recesses, holes, or openings or even to design massive solid concrete zones for a certain length of a slab. Such massive zones are always wet room areas with a huge amount of piping and other equipment and may be areas limited to the minimum anchorage length and concrete cover around cast-in parts, extra reinforcement, embeds, openings, and concentrated loads. Also, if a block does not fit entirely to the slab, for example, in slabs with unordinary shape, width, or length and in slabs with deep recesses, the block must be left out and replaced with solid concrete. The position and number of LECA-blocks is always designed in a way that the blocks are not cut or changed in any case, and the spacing, profile, length, width, and height of all blocks in one individual slab are always the same. However, in perspective, it is possible to modify or cut blocks or change the spacings and offsets, but the design and possibilities should be discussed directly with Lujabetoni Oy due to the production restrictions.

(iv) Reinforcement

In Luja-Superlaatta, reinforcing steel is arranged in both main and transverse directions among LECA-blocks (see Appendix 2). Main steel is the set of prestressed strands at the bottom and top, and transverse steel is non-stressed reinforcing bars distributed along the slab. The slab is very flexible for changes in dimensions and number of reinforcing bars and may be adjusted to fit the needs of a specific case by the omission of several blocks. The ends of the slab are reinforced with one T16 rebar of D-type shape, but, if necessary, additional reinforcement may be added, too. (Lujabetoni Oy, 2018; Abeo A/S, 2014)

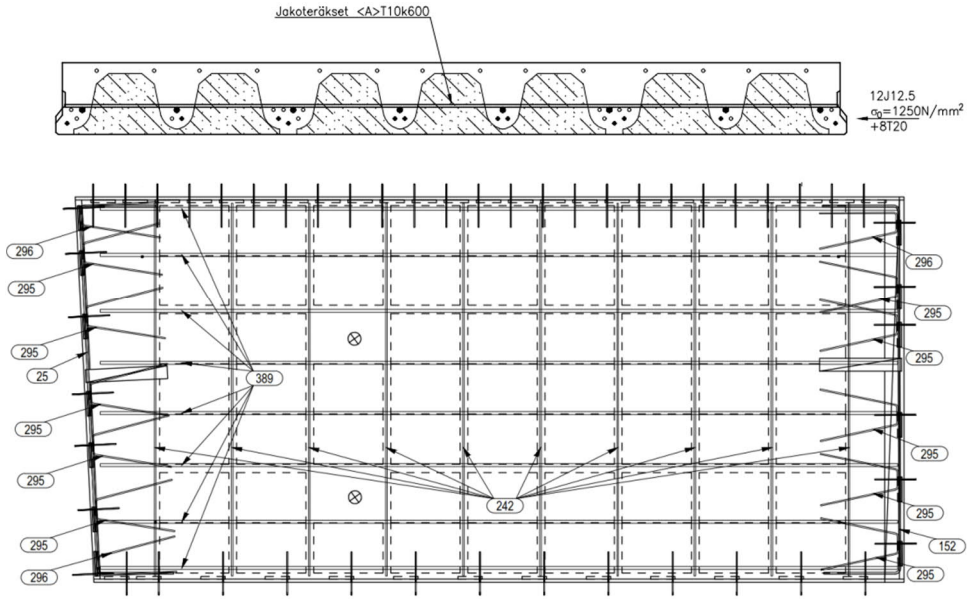

Figure 68. Reinforcement drawing: cross section view (top); top view (bottom) (Lujabetoni Oy, PDF-file snapshot)

(v) Concentrated loads

The bearing capacity of Luja-Superlaatta is variable across the slab. Zones comprised primarily of lightweight concrete have a limited capacity for a single point or line loads. In the lightweight concrete zones, the point load resistance is 22.6 kN when the point load diameter is 50 mm, 35.2 kN when the diameter is 100 mm, and 44.8 kN when it is 100x100 mm. However, it is possible to leave out lightweight concrete and design solid concrete zones in order to improve the punching shear resistance. Also, extra normal reinforcement may be placed in such areas to further increase the capacity. (Lujabetoni Oy, 2018; Abeo A/S, 2014)

(vi) Types

The standard versions of Luja-Superlaatta are suitable for passive environment with the XC1 exposure class. However, the slabs may be also manufactured to fulfill the requirements of other environmental classes, including especially aggressive environmental classes for parking facilities.

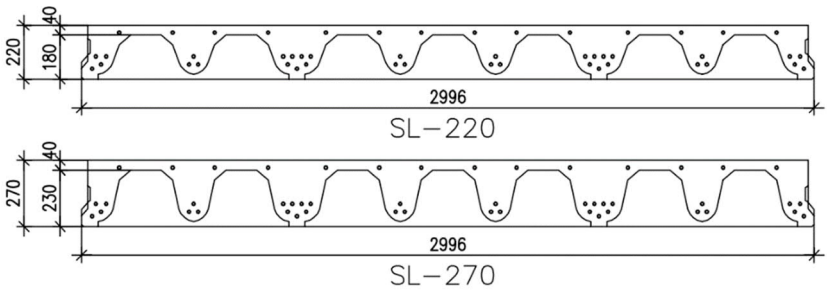

Figure 69. Luja-Superlaatta types (Lujabetoni Oy, PDF-file snapshot)

Nowadays, there are two types of Luja-Superlaatta available on the Finnish market: SL-270 (270 mm thick) and SL-220 (220 mm thick). The slabs are produced with 180 mm and 230 mm cast-in lightweight concrete blocks, correspondingly. The width of the blocks is 390 mm, and the length is 540 mm. The spacing of block groups is 60 mm along a slab and 65 mm across the slab. The offset from the sides of the slab is 68 mm. The thickness of the self-compacting concrete on the top of the blocks is 40 mm in both cases. (Lujabetoni Oy, 2018)

(vii) High-strength slabs

For specifically heavy-loaded areas, the special variation of Luja-Superlaatta called a DF/S-slab may be used. It is a presressed slab with lattice girders cast into the top of the slab for the further screed installations. The width of the DF/S-slab is 3 m, and the thickness may be up to 1 m. The DF/S-slab was developed by a Swedish company Prefabmästarna Sverige AB owned by Lujabetoni Oy and is designed to suit to the Luja-Superlaatta production line. (Lujabetoni Oy, 2018)

Figure 70. DF/S-slab (Lujabetoni Oy, 2018)

(viii) Materials

In typical Luja-Superlaatta slabs, the following material grades are normally selected:

- Normal concrete grade: C25/30
- Lightweight concrete grade: C2.5/3
- Self-compacting concrete grade: C55/67
- Concrete grade for wet rooms: C55/67
- Prestressed steel reinforcement: J12,5 (93 mm^2) 1630/1860 N/mm^2
- Non-stressed steel reinforcement: B500B

(ix) Bearing capacity and deflections

(ix.i) Bearing capacity

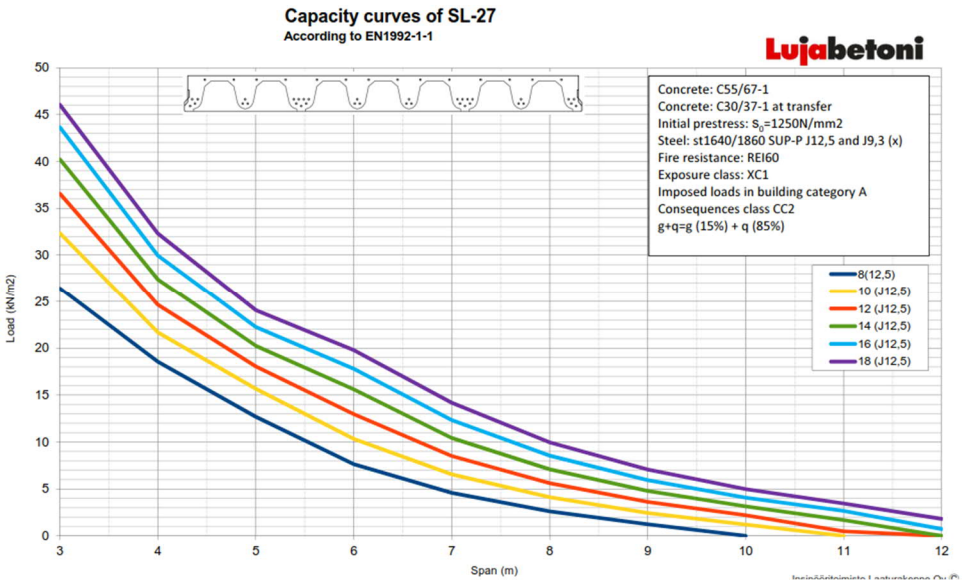

Figure 71. Bearing capacity curves of SL-270 (Lujabetoni Oy, PDF-file snapshot)

*bearing capacity tables of SL-220 may be found in Appendix 2

(ix.ii) Deflections

Difference in the deflections of slabs due to the contraction of the prestressed steel tendons may be prevented by applying loads to the slabs before joints are grouted or, alternatively, by blocking up the slabs. (Abeo A/S, 2014)

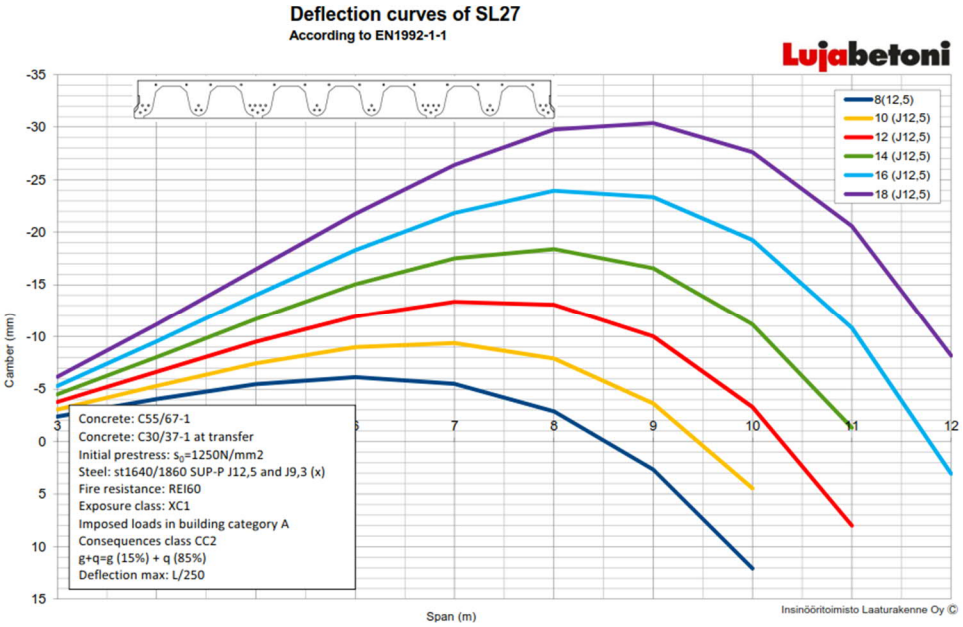

Figure 72. Deflection curves of SL-270 (Lujabetoni Oy, PDF-file snapshot)

(x) Standards

- Quality management is conducted by an independent third-party company according to ISO-9001 standards (ISO 14001 - Environmental Management Systems; ISO-18001 - Occupational Health and Safety Management Systems). Currently, the company is Inspecta Certification Oy.
- The structural design of individual slabs is always done by Insinööritoimisto Laaturakenne Oy according to SFS-EN 1990 (Rakenteiden suunnitteluperusteet), SFS-EN 1991 (Rakenteiden kuormat), SFS-EN 1992-1-1 and SFS-EN 1992-1-2 (Betonirakenteiden suunnittelu), and partly SFS-EN 1168 + A3 (Betonivalmisosat, ontelolaatat). The programs used for the determination of the strength capacity are JbPalkkiEC2 and CADeON Structural Analysis.
- The fire resistance of a similar SL-Deck was tested with the method based on EN 1365-2: 1999 (Fire resistance test for loadbearing elements – Part 2: Floors and roofs). The classification (REI 240) was assigned in accordance with the procedures given in DS/EN 13501-2:2007+A1:2009.
- The results of acoustic tests are checked according to the decree of the Ministry of the Environment on the sound level limits of the building 796/2017 (Ympäristöministeriön asetus rakennuksen ääniympäristöstä 796/2017). Calculations are based on EN 12354-1 and 12354-2.
- The punching shear resistance capacity of Peikko D16 PSB Punching Reinforcement installed into Luja-Superlaatta is checked according to CEN/TS 1992-4 - Design of Fastenings for Use in Concrete.
- The load capacity tests of Fisher fixings mounted in the underside of Luja-Superlaatta are conducted according to ISO 9001 handbook. (Abeo A/S, n.d.)

3.1.2 Characteristics

(i) Low weight

The main advantages of Luja-Superlaatta over other slab structures are its lightness and flexibility. In Luja-Superlaatta, the lightweight concrete accounts for approximately 50 % of the total slab volume, which reduces the weight by 30-40 % making the slab cheaper to produce, transport, and install. Furthermore, in massive zones of Luja-Superlaatta, such as possibly may be designed, for example, under concentrated loads or recesses for prefabricated bath units, the weight may be greatly reduced with the help of special light aggregate concrete machine (LACM) by the efficient arrangement of lightweight blocks avoiding the unnecessary overrun of heavy in-situ concrete. The self-weight of a standard SL-270 is 470 kg/m^2 and SL-220 is 382 kg/m^2. Recommended design values are 500 kg/m^2 and 405 kg/m^2 correspondingly. (Abeo A/S, n.d.; Lujabetoni Oy, 2018)

(ii) Improved geometry

Luja-Superlaatta incorporates in-situ and precast concrete in its structure, and, therefore, may be produced as fast and cost-efficiently as precast elements and may be made of different shapes as cast-in-situ structures. There are no voids in the slab, and, hence, no moisture may appear inside. Compared to the hollow core slab, Luja-Superlaatta with corresponding bearing capacity is much thinner, wider, and more flexible for openings and built-in parts. Thus, thinner slabs allow for the increased room height, while wider slabs are cheaper due to a reduced number of liftings and connections between the slabs as well as higher square meters per production cycle. Thinner profiles also mean longer spans than hollow cores of the same thickness. Furthermore, Luja-Superlaatta may include fixed-end assemblies over load-bearing walls or beams increasing the spans up to 75 % comparing to simply supported slabs. (Abeo A/S, n.d.)

Figure 73. Specific geometry of Luja-Superlaatta (Lujabetoni Oy, n.d.)

(iii) High fire resistance

Luja-Superlaatta is able to resist exposed standard fire more than four hours without the need of any additional fire insulation, which makes it the most fire-resistant prefabricated slab. This becomes possible due to its unusual structure with incorporated reinforcing steel positioned higher from the bottom surface than normally and protected by insulating and fire-resistant LECA material, which, itself, is made in ovens at approximately 1200°C. Depending on the span, load and reinforcement, Luja-Superlaatta is able to withstand fires according to REI240. However, in wet room zones or similar massive zones, the fire protection should be designed according to the fire design of a corresponding solid reinforced concrete slab. (Lujabetoni Oy, 2018)

(iv) High sound-proofing

Sound-proofing indeed is one of the main advantages of Luja-Superlaatta since, in this case, it is not only the question of the section thickening in order to improve acoustic properties. In fact, Luja-Superlaatta with the thickness of only 220 mm shows quite great results during sound tests. As long as the slab consists of two materials with different eigenfrequencies, which means that they vibrate differently, transmitted sound partly converts to heat instead of passing through the slab. The higher level of sound-proofing is also achieved due to the self-compacting concrete constructed as a series of arches over lightweight blocks meaning that the structure is stiffer than a simple flat plate slab and consequently has higher eigenfrequency. (Abeo A/S, n.d.; Lujabetoni Oy, 2018)

According to the acoustic test report, provided by Helimäki & Co Oy on 20.03.2018, Luja-Superlaatta SL-270 meets the requirements of both airborne and step noise acoustic regulations for residential housing. The measurements are based on the slabs without an additional screed and flooring installed. Also, several on-site measurements of slabs with integrated underfloor heating were made in Hansakallio project (Fira Group Oy, ei pvm), and the slabs were complied with the standards. Without the underfloor heating, the results would be even greater. (Helimäki Akustikot Oy, 2018)

(v) Wet room built-in parts

Traditionally, wet room pipes, drains, grills, and other equipment are installed inside the screeds on the top of prefabricated slabs, which makes the slabs thicker and obligates to extend the rest of a floor to the same top level. However, this is not economical and time-efficient due to expensive and massive structures, and screed installation works. Luja-Superlaatta may incorporate a variety of built-in parts including bathroom pipe systems, and this possibility is perfectly realized during the production phase. Due to this integration, installation works at site become simpler, installation time is shortened, and total costs are reduced. (Abeo A/S, n.d.)

Figure 74. Wet room built-in parts (Abeo A/S, n.d.)

3.1.3 Production method

(i) Formwork

Luja-Superlaatta is produced on a long steel mold with the use of the LACM. The sides of the mold are fitted with small blocks, creating recesses on the longitudinal edges of the slab. These recesses work as shear locks after they are filled with concrete during the on-site installation. Once the length of each slab is determined, end forms and additional forms for openings, curves, wet room zones, or special narrow slabs are placed on the mold. (Lujabetoni Oy, 2018; Abeo A/S, 2014)

(ii) Decking

When the forms are placed, a 10 mm mortar layer is cast manually. However, built-in lighting sockets and junction boxes must be placed before the mortar layer is cast. Then, the lightweight concrete blocks installed on the top of the mortar with the help of the LACM developed to create the special geometry of blocks needed in Luja-Superlaatta. The machine is controlled by a computer that uses a BIM model for the block shapes and arrangement. If a ceiling with acoustic properties is needed in a project, a thin layer of mortar can be left out and the lightweight concrete will be showing. By leaving the porous lightweight concrete exposed, the positive sound-dampening effect in the room below is achieved. (Lujabetoni Oy, 2018; Abeo A/S, 2014)

Figure 75. LACM (left) and LECA-Blocks (right); (Abeo A/S, n.d.)

(iii) Reinforcement and cast-in parts

After the LECA-blocks are cast, the slab is reinforced with both prestressed and non-stressed steel. Prestressed steel is placed in the longitudinal direction, while the transverse reinforcement is normally not-stressed. During this process, any fittings, steel plates for welding, electric or underfloor heating pipes, or other details are also placed in their correct position. However, underfloor heating pipes are normally placed after the other equipment of the slab.

During manufacturing, the sides of slabs are made with the use of steel molding forms. Therefore, any steel reinforcement exceeding beyond the sides of the slab must be avoided. (Lujabetoni Oy, 2018; Abeo A/S, 2014)

(iv) Topping

When all cast-in parts are installed, the hydraulic sides of the mold are pushed in place, and self-compacting concrete is cast. At this point, lifting anchors should be placed in the wet concrete. If needed, the top surface is then roughened for flooring. Later, the slab is cured and covered with thermal blanked maintaining a viable curing temperature. (Lujabetoni Oy, 2018; Abeo A/S, 2014)

(v) Wet room zones

Wet room pipes and drains are installed in special places prepared in advance. Such zones are cast with self-compacting concrete in two to three hours after topping. If necessary, wet room zones may be cast separately at different casting points or at site. (Lujabetoni Oy, 2018; Abeo A/S, 2014)

Figure 76. Luja-Superlaatta in wet room zones (Abeo A/S, n.d.)

3.2 Detailing

This section is focused on the detailing of Luja-Superlaatta. It covers such topics as the typical details, cast-in parts, openings, and structural types of the slab.

3.2.1 Typical details

(i) End support connections

The minimum bearing depth of the end supports carrying Luja-Superlaatta is 60 mm, but 70 mm is the recommended value. Also, it is possible to use Peikko PVL, Semtu VS, or similar connecting loops in such connections if needed. Usually, PVL100 is the standard variant.

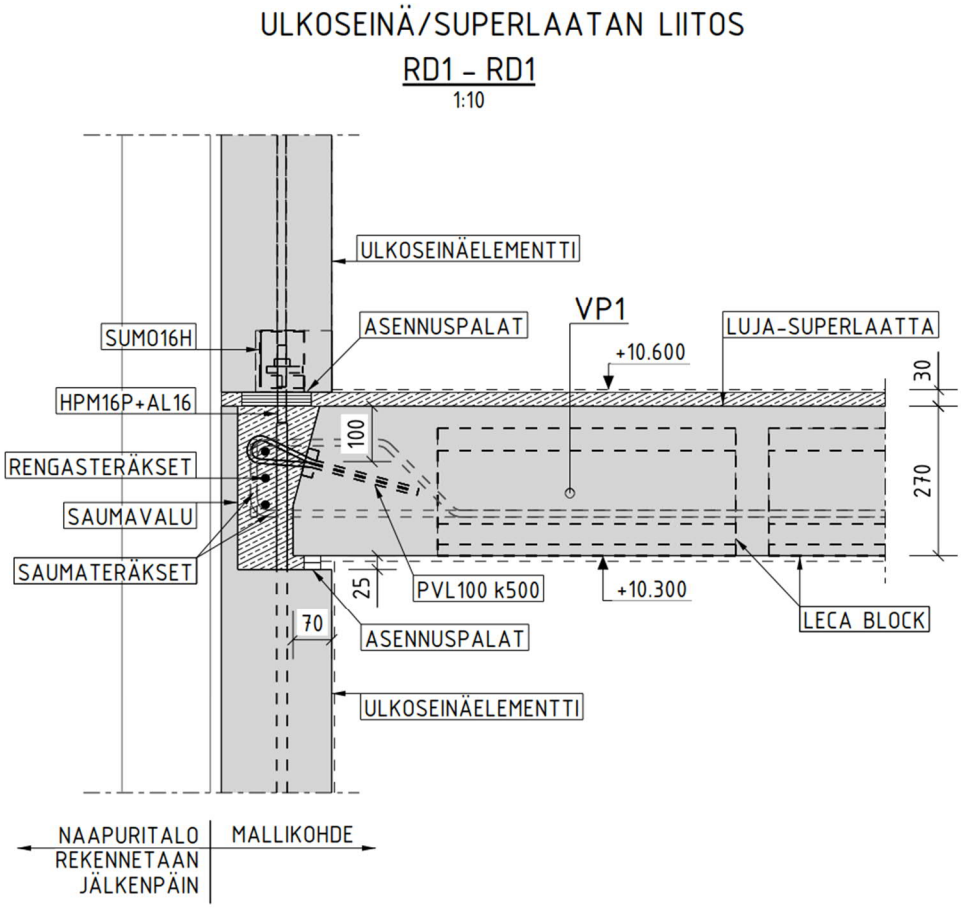

Figure 77. End-support connection (Tekla Structures drawing snapshot)

(ii) Side joints

The side connections of Luja-Superlaatta slabs to walls or other structures may also be made with the use of connecting loops. It is recommended to use Peikko PVL or Semtu VS loops instead of PASI-loops.

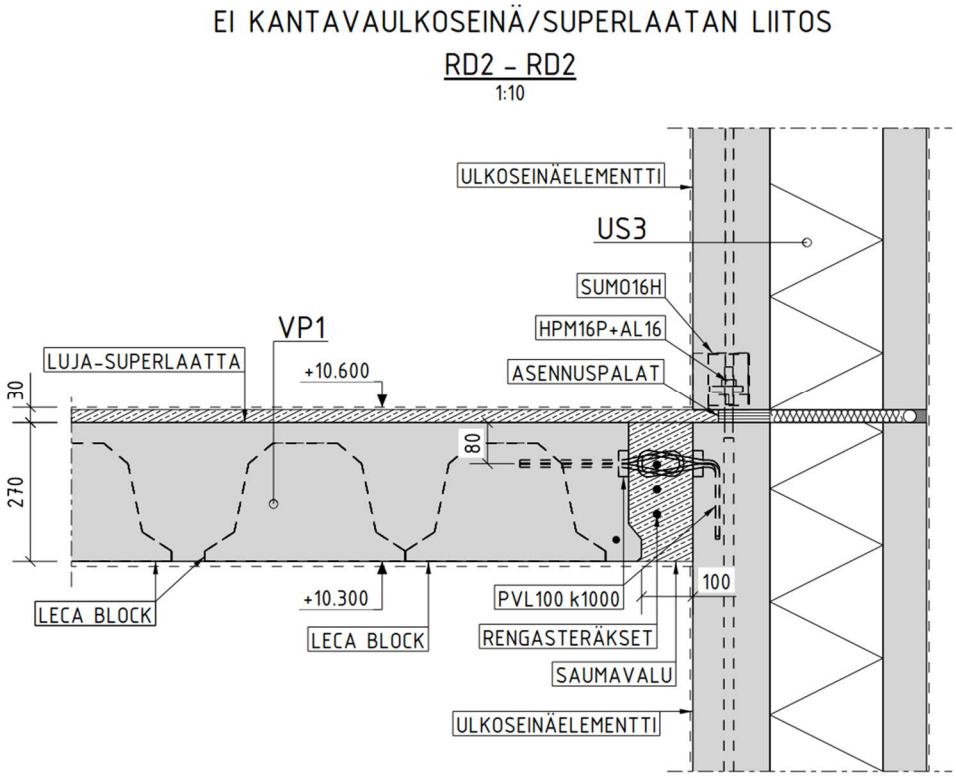

Figure 78. Connection to wall with PVL connecting loops (Tekla Structures drawing snapshot)

(iii) Longitudinal joints

Internal joints are similar to those of hollow core slabs, but Luja-Superlaatta is provided with specific recesses on the sides developing the shear key action when the joints are filled with concrete. The size of the recesses is 65x100x11 mm, and the spacing is 200 mm. The shear strength of this type of joint filled with C25/30 concrete is 44.8 kN/m for SL-270 and 43.3 kN/m for SL-220. (Lujabetoni Oy, 2018)

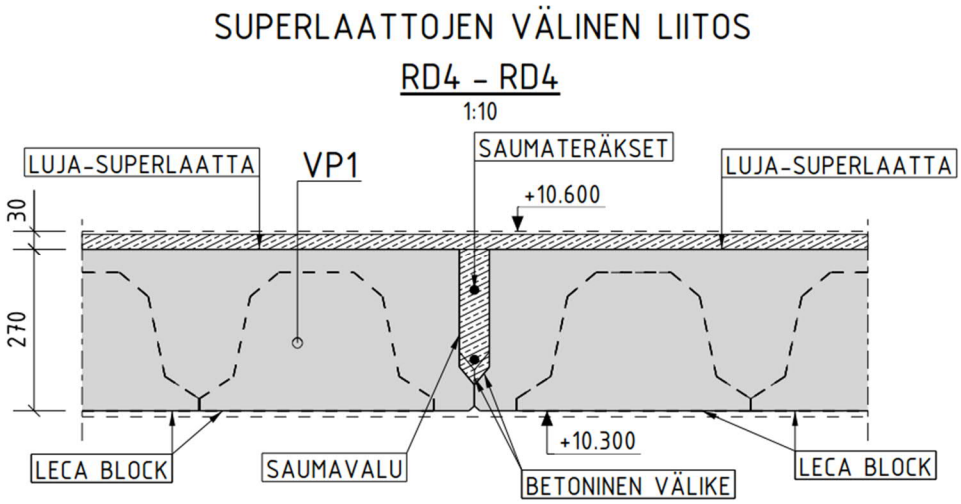

Figure 79. Longitudinal joint (Tekla Structures drawing snapshot)

(iv) Joint reinforcement

Joint reinforcement is designed case-by-case in the same manner as in hollow cores, but the dimensions differ due to the specific joint type and slab width. In Finland, the joint design for CC3 class buildings should be made according to the following regulations:

- National Annex to standard SFS-EN 1991-1-7: Actions on structures. Part 1-7: General actions. Accidental actions
- Betoninormikortti 23_EC: litosten suunnittelu ja mitoitus onnettomuuskuormille standardin SFS-EN 1991-1-7 yleiset kuormat, onnettomuuskuormat mukaan

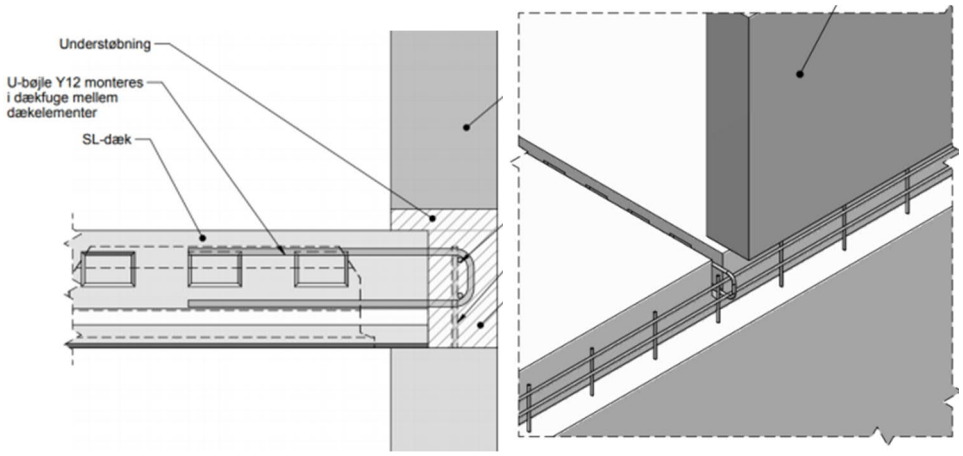

Figure 80. Joint reinforcement at the sides: detail (left); perspective view (right); (Abeo A/S, n.d.)

(v) Other details

(v.i) Fixed end connections

The fixed end connection may be used for big spans and heavy loaded slabs due to the partial distribution of tensile stresses to the hogging reinforcement.

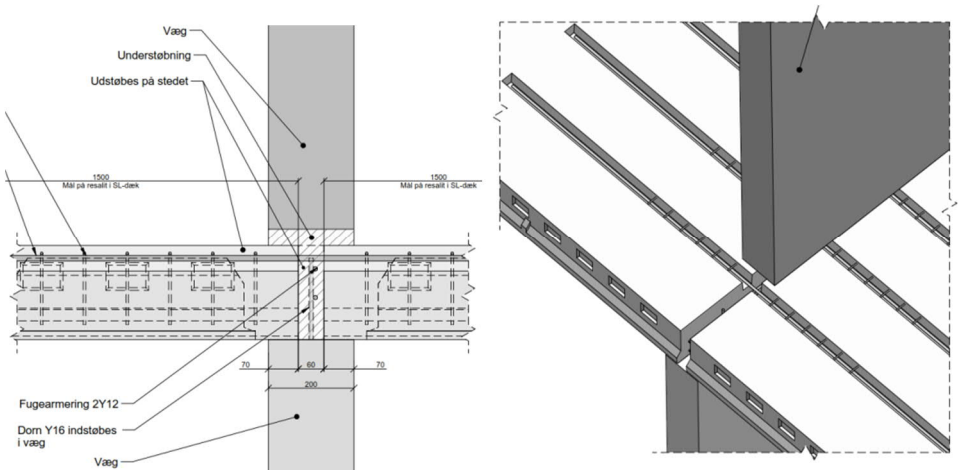

Figure 81. Fixed end connection over the wall: detail (left); perspective view (right); (Abeo A/S, n.d.)

(v.ii) Connections to steel beams

Steel beams may be used in various cases, for example, under a load-bearing wall supporting onto the midspan of a slab or when it is needed to split a long-spanning slab into two short-spanning slabs.

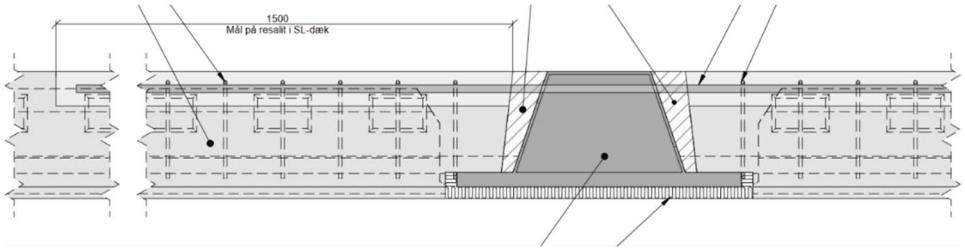

Figure 82. Delta beam connection (Abeo A/S, n.d.)

(v.iii) Double-long slab

A double-long slab is the solution for a layout with a row of short spans. One slab may be used for a number of spans if it fits to the transportation and lifting limitations. This makes the installation process faster and reduces the costs as well due to the decreased number of liftings and connections that should be controlled.

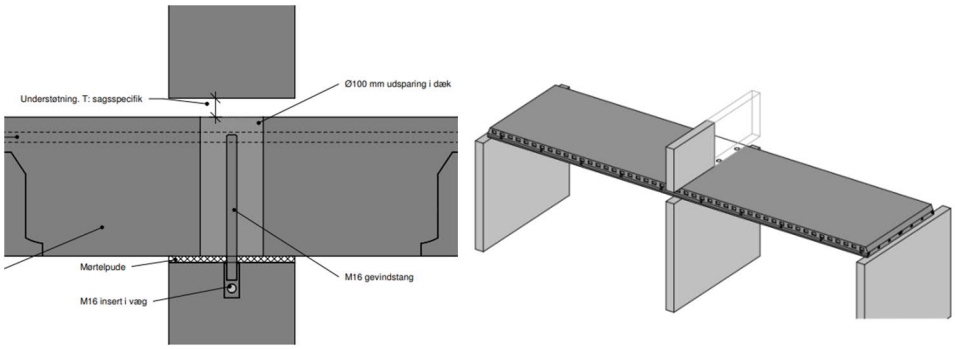

Figure 83. Double-long slab connection: detail (left); perspective view (right); (Abeo A/S, n.d.)

(v.iv) Cantilevered slab

Cantilevered end of Luja-Superlaatta may be used as a balcony if the supporting wall has the sufficient bearing capacity. Alternatively, balcony mounting systems, such as Schöck Idock, Halfen HIT, or Peikko PS may be used.

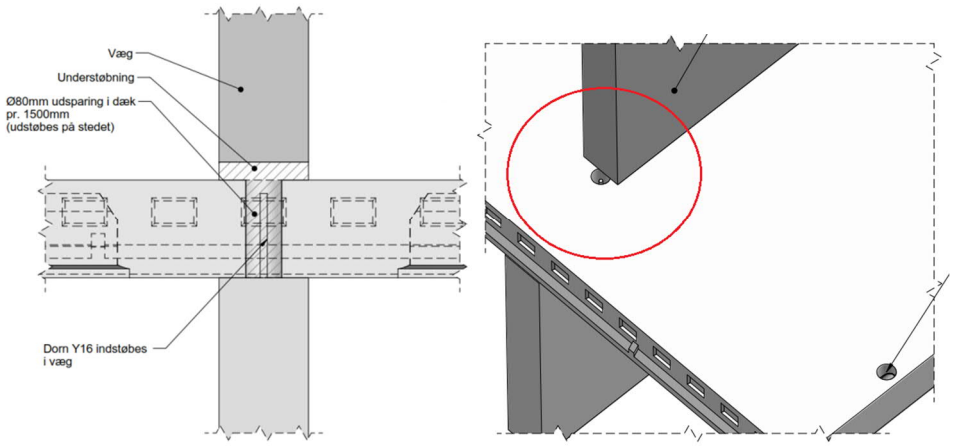

Figure 84. Cantilevered slab connection: detail (left); perspective view (right); (Abeo A/S, n.d.)

(v.v) Hammerhead connections

Hammerhead connections may be designed on the sides of slabs in order to increase the shear resistance of internal joints.

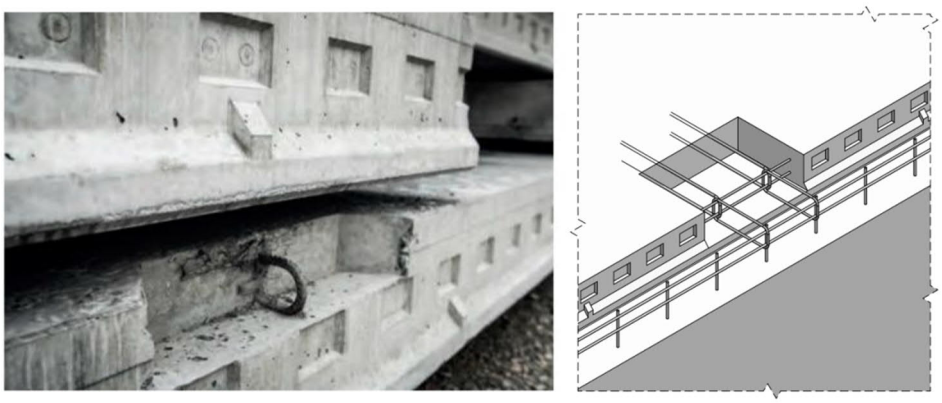

Figure 85. Slab with hammerhead connection (left) and the detail of the hammerhead assembly (right); (Abeo A/S, n.d.)

This is also a good solution for a connection to a cast-in-situ slab at the side of Luja-Superlaatta. However, Lujabetoni Oy recommends using connecting loops instead of the hammerhead connection method since the hammerhead connections are not widely used in Finland, and the slabs with loops are easier to produce and install.

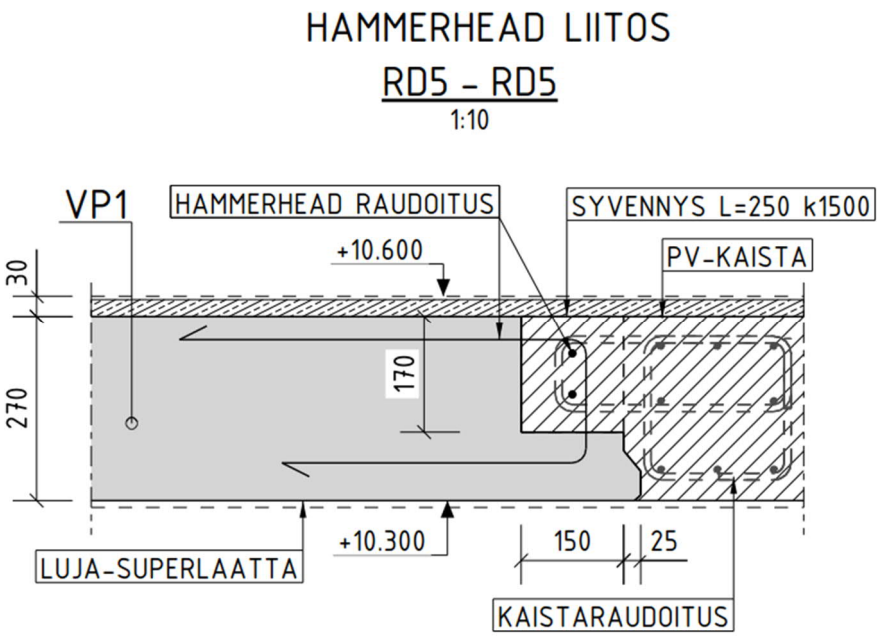

Figure 86. Hammerhead connection: Luja-Superlaatta to the cast-in-situ slab (Tekla Structures drawing snapshot)

(v.vi) Blade connections

Luja-Superlaatta may be produced in a special version with reinforced corbel at the top or bottom of the slab allowing for blade connections. Blade connections make possible to reduce the floor thickness with about to 50 % of the slab thickness as well as to hide supporting beam flanges achieving a smooth soffit beneath. This also results in the simpler mounting of service path installations and wider rebuilding possibilities. (Abeo A/S, n.d.)

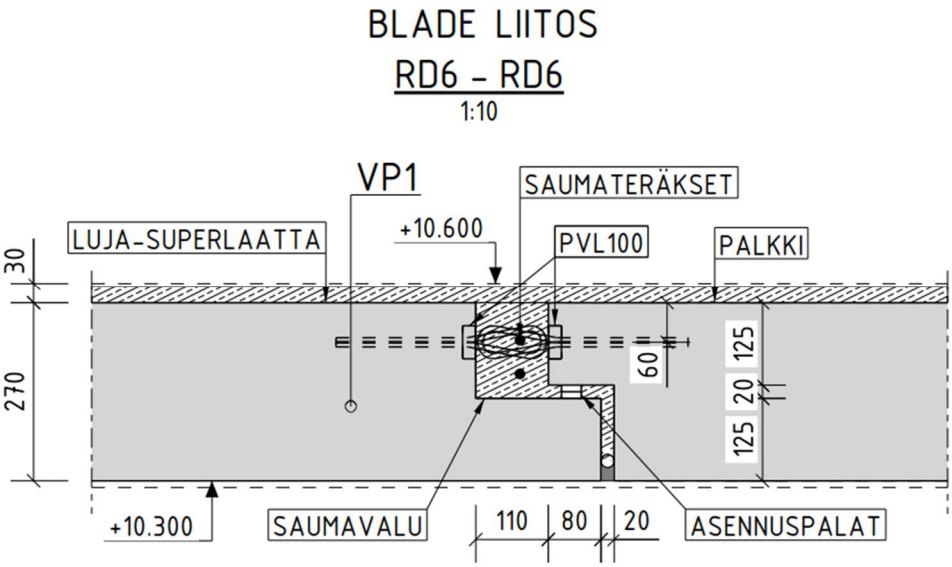

Figure 87. Blade connection: Luja-Superlaatta to precast beam (Tekla Structures drawing snapshot)

(v.vii) Hormielementti connections

Hormielementti is a prefabricated element, and it may include water pipes, heating lines, sewers, ventilation ducts, and piping for electrical and telecommunication cables. The basic idea of the Hormi-technology is to assemble all rising pipe lines and other rising equipment into one bundle in order to install them on a construction site at once. Such technology is very effective in the combination with Luja-Superlaatta slabs during the construction process. Since both products are prefabricated and all built-ins are placed in a factory, the installation works at site are greatly reduced, which results in time and cost savings. In comparison with hollow core slabs, Luja-Superlaatta is normally cut for the whole height at the location of passing pipes in order to ease the pipe installation works at site by the provision of additional space.

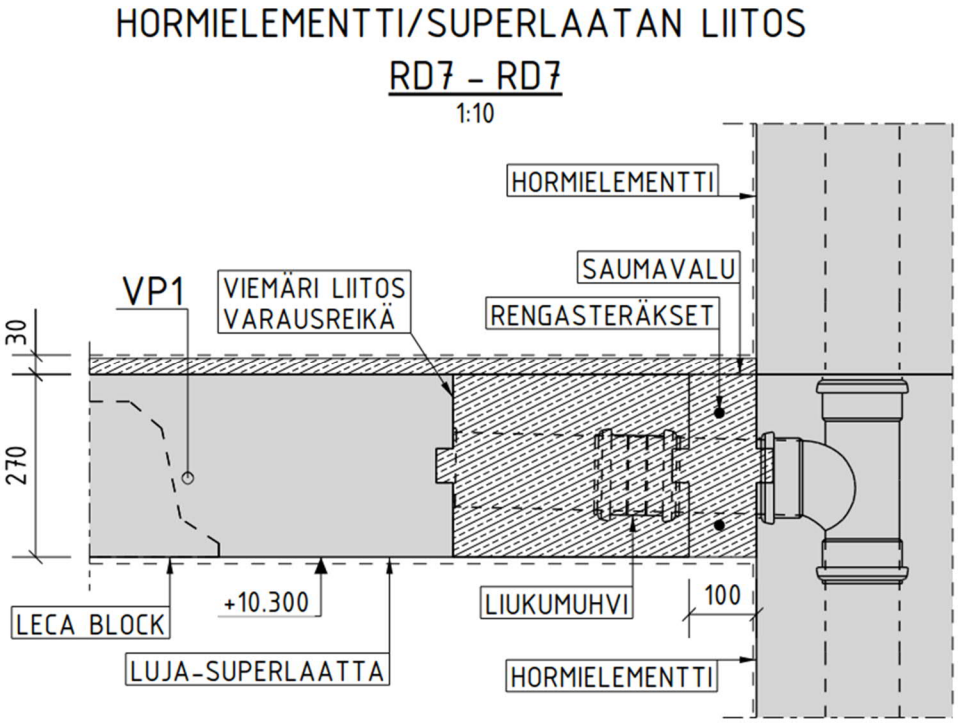

Figure 88. Hormielementti connection (Tekla Structures drawing snapshot)

3.2.2 Cast-in parts

(i) Reinforcement and embeds

Cast-in embeds and additional reinforcement are installed during the production by partly omitting lightweight blocks at the object location resulting in a massive zone ensuring appropriate anchorage and transfer of forces from an object to a concrete slab.

Figure 89. Cast-in hanger (left) and cast-in extended reinforcement (right); (Abeo A/S, n.d.)

The following cast-in embeds are the most commonly used with Luja-Superlaatta (Abeo A/S, n.d.):

- Holders for safety guard rails
- Hangers
- Standard or specially designed steel brackets
- Extra reinforcement for strengthening slabs locally
- Built-in tree mold in the bottom of an opening for installations
- Extending brackets/reinforcement for mounting of edge reinforcement
- Extending brackets/reinforcement for interaction with in-situ concrete

(ii) Fixed-end assemblies

It is possible to use fixed-end assemblies over supports increasing the slab spans. This technique makes the slabs continuous as well as allows for the increase of sound-proofing by the improvement of the floor vibrations. Recesses and steel embeds are added to the slabs in the factory. Later, when the slabs are installed at a construction site, steel bars, bolts, or studs are simply passed throughout the recesses connecting the slabs. The recesses are then filled with concrete at the same time and in the same way as joints between slabs. Alternatively, such connections may be made by welding of two plates cast into the edges of adjacent slabs. (Abeo A/S, n.d.)

Figure 90. Installed fixed-end assemblies with bolts (Abeo A/S, n.d.)

In Finland, the recommend way is the connection with steel studs since it requires less installation work. For this type of connection, the recesses with special shape, embeds, and reinforcement should be provided.

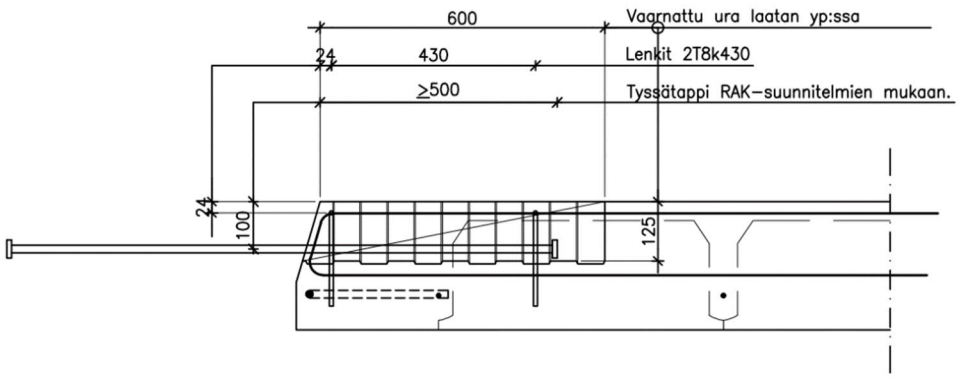

Figure 91. Fixed-end assembly with studs (Lujabetoni Oy, PDF-file snapshot)

(iii) Integrated balconies

Luja-Superlaatta may be delivered to a site with recesses for mounting of the balconies to the side of the slab. For example, Schöck IDock module elements may be used during the production to prepare recesses for specific mounting systems, such as Schöck Isokorb KXT series. One more option is to add embedded insulation across the slab, which makes possible to use the cantilevered end as a balcony or gallery. The design of integrated balconies is made by Lujabetoni Oy in cooperation with the producers of mounting systems. (Abeo A/S, n.d.; Lujabetoni Oy, 2018)

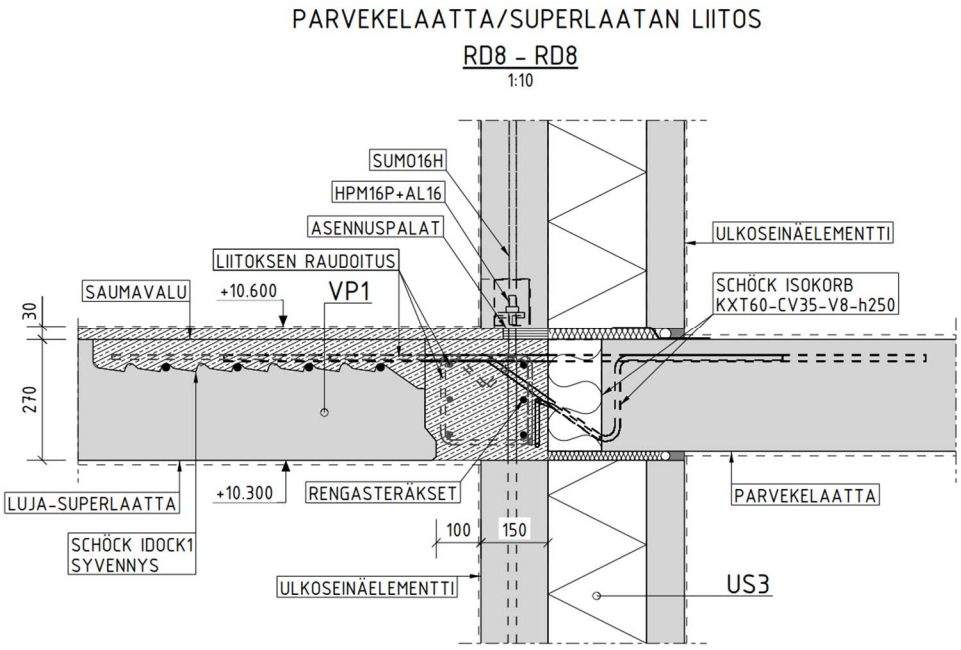

Figure 92. Balcony slab connection with integrated Schöck IDock (Tekla Structures drawing snapshot)

(iv) Electric systems

For electrical paths, standard built-in parts are used. Normally, the diameter of cast-in pipes is 20 mm, but other sizes are also permitted. Continuous wires passing from one slab to another are not recommended. During the production, lighting and junction sockets are placed at the bottom before the mortar layer is cast. The electrical built-ins are installed in the factory according to electrical plan drawings, and, hence, this information should be provided before the process of casting is started. (Lujabetoni Oy, 2018)

Figure 93. Embedded electric pipes (Abeo A/S, n.d.)

(v) Underfloor heating systems

The type of electric underfloor heating used in Luja-Superlaatta depends on the needed amount of heating and the size of a heating area.

Water underfloor heating pipes are Uponor Comfort Pipe 17x2 mm. Uponor calculates the number of water pipes in accordance with the thermal calculations obtained from a customer. This method is certified and patented by Uponor. Slabs with underfloor heating must not be drilled at site unless permissible drilling locations are marked. Such slabs are installed and joined with each other with respect to the connecting grooves. Once installed, the joints are insulated, but not filled with concrete in order to keep an access for the inspection works. Alternatively, it is also possible to make continuous pipes coming from each slab directly to manifolds. In this case, the ends of cast-in pipes are initially rolled as a coil and then are expanded and placed into special recesses made in neighbouring slabs and leading to manifolds.

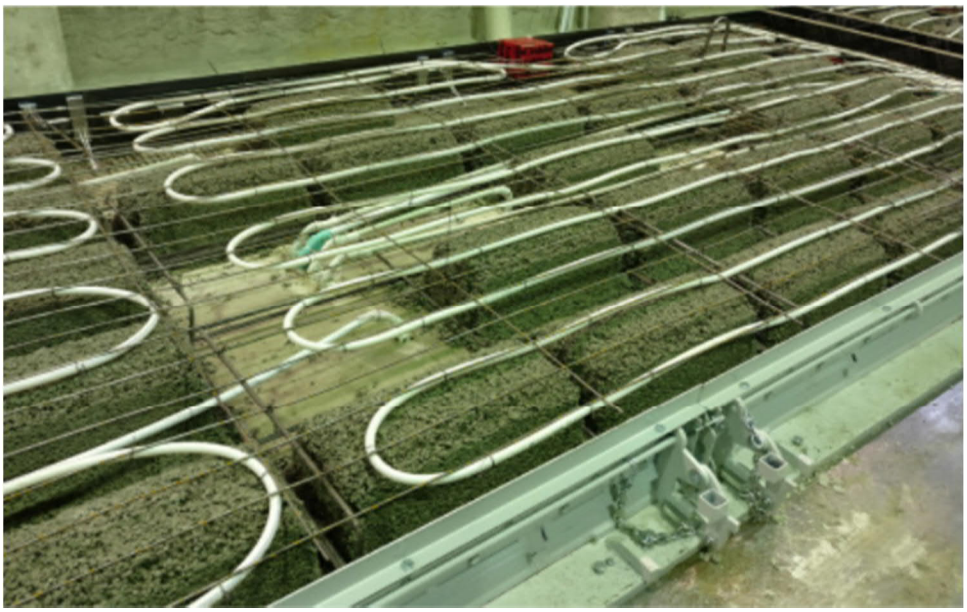

Figure 94. Placing of underfloor heating pipes (Lujabetoni Oy, 2018)

(vi) Wet room systems

The size of water pipes under wet rooms is based on the plans made by the customer's HVAC design. The material used for pipes is plastic. One possible solution for cast-in drainage wells is the Vieser One. The height of the well may be slightly adjusted at site, and the shape may be selected on the case-by-case basis.

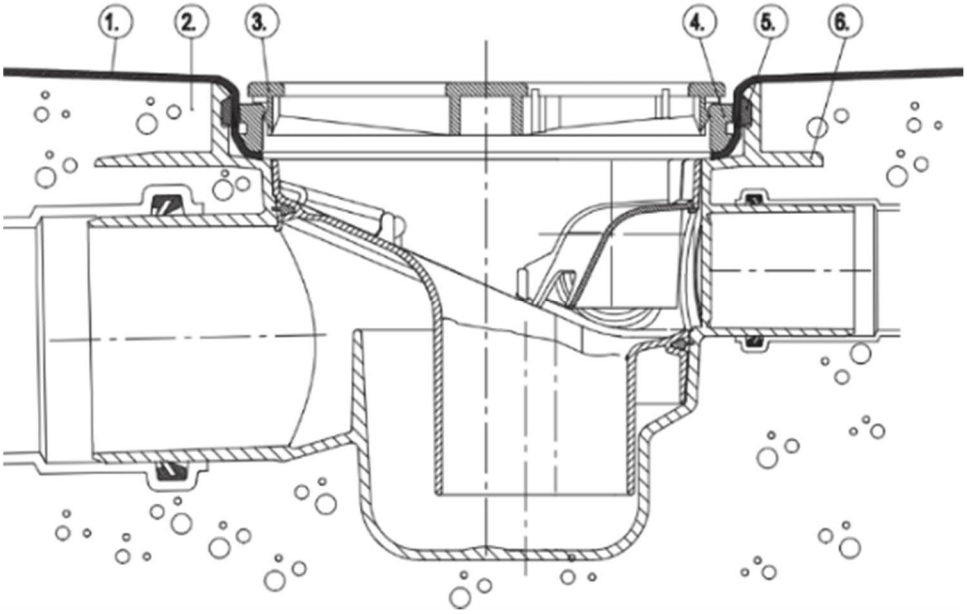

Figure 95. Vieser One (Vieser Oy, n.d.)

Furthermore, water pipes in wet rooms may be used for floor cooling. The design of floor cooling is usually made by Uponor. (Lujabetoni Oy, 2018)

3.2.3 Openings

(i) Position and limitations

Luja-Superlaatta is very flexible for openings since the biggest attention is paid to the placement of reinforcing bars and the load-bearing capacity of an individual slab and of a final structure. Openings are made in the factory by placing opening molds onto casting lanes before lightweight concrete is cast. The limits for the opening dimensions may be calculated in a similar manner as for 270 mm prestressed reinforced concrete slab (see section 2.3.3). However, the maximum permissible width of one opening or the total width of a group of openings across the slab is the half of the slab width. (Abeo A/S, n.d.; Lujabetoni Oy, 2018)

Figure 96. Openings (Abeo A/S, n.d.)

(ii) Small openings

To avoid the reduction of the bearing capacity of Luja-Superlaatta, it is recommended to design small openings in the location of LECA-blocks in the range between reinforcing steel. Small openings are usually made in the factory, but it is also permissible to cut them at site if the locations of steel tendons are marked on the slab. However, in that case, big attention should be paid to the exposed surface of LECA-blocks since moisture may occur inside them and start to accrue. (Abeo A/S, n.d.; Lujabetoni Oy, 2018)

3.2.4 Structural types

(i) Screeds

In practice, the top surface of Luja-Superlaatta is not visible when a floor is finally constructed. Usually, levelling or normal concrete flooring (see section 2.3.4(i)), such as LujaFlow 20/60, is cast on the top of slabs. Therefore, such slabs are normally produced with a roughened top surface in order to achieve a good bond with the flooring. (Lujabetoni Oy, 2018)

(ii) Wet rooms

In bathrooms, or similar rooms, where the floors are expected to contact with water, Luja-Superlaatta slabs are provided with a prefabricated gradient. The gradient is usually designed by Lujabetoni Oy at the same time as bathroom cast-in parts in accordance with architectural and HVAC drawings. Thus, once the slabs are delivered to a construction site,

they are already prepared for the flooring and further bathroom furniture installations. In order to avoid a mismatch with adjacent building elements, for example, bathroom walls, the gradient is made with appropriate tolerances. Normally, the height of Luja-Superlaatta slabs designed under wet rooms is, approximately, 270-310 mm.

(iii) Concentrically loaded areas

Slabs subjected to concentrated loads are designed with wide zones of a solid concrete section. Although that concrete possesses quite good sound-dampening properties, those zones still require an additional fire insulation layer and must be capable to fulfill REI120. Therefore, such places are usually thicker than the rest of a floor and may affect the room height, which should be considered.

(iv) Thermal insulation and concrete cover

Thermal insulation may be installed beneath the bottom surface of Luja-Superlaatta in a similar manner as for a hollow core slab (see section 2.3.4(ii)). However, according to the exact tests of the thermal conductivity of Luja-Superlaatta, it is possible to decrease the insulation thickness. Also, it is recommended to design the same concrete cover of reinforcement as for a hollow core slab. (Lujabetoni Oy, 2018)

3.3 Design method

The information presented throughout the following section is based on the document provided by Lujabetoni Oy and translated to English language. The section describes the basic aspects of the design method of Luja-Superlaatta and is divided into three sections: design factors, ULS, and SLS calculations.

3.3.1 Coefficients and calculation factors

If a coefficient is not defined, it should be selected in accordance with Eurocode regulations (SFS-EN 1990, SFS-EN 1991, SFS-EN 1992-1-1 and SFS-EN 1992-1-2, SFS-EN 1168 + A3, and Finnish national annexes of the abovementioned standards).

(i) Action factors (NA to EN-1990 annex A1)

K_{FI} = 1.0 or 1.1	Factor applicable to actions for reliability differentiation (CC2 or CC3 consequence classes, correspondingly)
γ_{g1} = 1.35 / γ_{g2} = 1.15	Partial factor for permanent actions in calculating upper / lower design values
γ_{q1} = 1.5	Partial factor for variable actions

(ii) Recommended combination factors (NA to EN-1990 annex A1)

$\psi_0 = 0.5$	Factor for combination value of a variable action
$\psi_1 = 0.3$	Factor for frequent value of a variable action
$\psi_2 = 0.2$	Factor for quasi-permanent value of a variable action

*combination factors vary by load categories and, therefore, are not constant

(iii) Material factors (NA to EN-1992-1-1 annexes 2.4.2.4 and 3.1.6)

$\gamma_c = 1.5$ or 1.2	Partial safety factor for concrete for ULS in persistent & transient or accidental design situations, correspondingly
$\gamma_r = 1.15$ or 1.0	Partial safety factor for reinforcing steel for ULS in persistent & transient or accidental design situations, correspondingly
$\gamma_s = 1.15$ or 1.0	Partial safety factor for prestressing steel for ULS in persistent & transient or accidental design situations, correspondingly
$\alpha_{cc} = 0.85$	Coefficient considering long-term effects on the compressive strength and unfavourable effects resulting from the way the load is applied
$\alpha_{ct} = 1.0$	

(iv) Other coefficients (EN-1992-1-1 clauses 6.2.2 and 6.2.3)

$C_{Rd,c} = 0.18 / \gamma_c = 0.12$	
$v_{min} = 0.035 * k^{3/2} * f_{ck}^{1/2}$	
$k_1 = 0.15$	
$v = 0.6 * (1 - f_{ck} / 250)$	Strength reduction factor for concrete cracked in shear
$\cot \theta = 1.43$	Cotangent of the angle between the concrete compression strut and the slab axis perpendicular to the shear force (θ = 35 degrees)

3.3.2 Ultimate limit state

In the ULS design, lightweight concrete (LECA-blocks) is treated only as loads and not assumed as a part of the slab structure.

(i) Bending

The bending capacity is calculated according to SFS-EN 1992-1-1 in a way that the compressive stress is determined according to formulas (3.14),

(3.17), (3.19), or (3.20). It is recommended to use formulas (3.14) or (3.17). Otherwise, the standard SFS-EN 1992-1-1 and its Finnish national annex should be followed.

(ii) Shear

The shear capacity is calculated according to SFS-EN 1992-1-1 clause 6.2 assuming that slabs are not provided with shear reinforcement. The shear reinforcement may be added, but it is not recommended.

The shear capacity of the cracked areas of one-span prestressed slabs without shear reinforcement subjected to bending moment tension may be calculated by using formulas (6.2a) or (6.2b). The largest value is selected. In the non-cracked areas of such slabs subjected to bending moment tension, the shear resistance may be reduced by using the formula (6.4) or the hollow core standard 1168 + A3 with the modified shear capacity formula. Otherwise, the standard SFS-EN 1992-1-1 and its Finnish national annex should be followed.

(iii) Anchorage of strands and rebars

The anchorage of strands is calculated according to SFS-EN 1992-1-1 clause 8.10. The anchoring length of the strands is selected as l_{pt1} or l_{pt2}, whichever is the most unfavourable case. The splitting stresses that may be caused by the strand release are calculated according to the hollow core standard 1168 + A3 4.3.3.2.1. The anchorage of normal rebars is calculated according to SFS-EN 1992-1-1 clause 8.1-8.9.3. Otherwise, the standard SFS-EN 1992-1-1 and its Finnish national annex should be followed.

(iv) Punching Shear

Design punching shear resistance to a point load in the location of LECA-blocks may be calculated by using formula (1):

$$V_{Rd} = u * (h_{eff} * f_{ctd} + h_t * f_{ctd,t}) \text{ [kN]} \qquad (1)$$

where:

$u = 2 * (a + b + 2_{heff} + h_t)$	Area of a rectangular point load action
$u = \pi * (D + h_{eff})$	Area of a circular point load action
a and b	Area dimensions of a rectangular point load action
D	Area diameter of a circular point load action
h_{eff}	Effective thickness of a concrete cover on the top of LECA-blocks (normally 40 mm)
h_t	Screed thickness
f_{ctd}	Design tensile strength of the slab concrete
$f_{ctd,t}$	Design tensile strength of the screed concrete

If the breadth of the load action area is greater than the half of a slab thickness, for example, 110 mm in SL-220, the design punching shear resistance to such a point load in the location of concrete webs (between and on the sides of LECA-blocks) may be calculated by using formula (2):

$$V_{Rd} = b_{eff} * h * f_{ctd} * (1 + 0.3 * \alpha * \sigma_{cp} / f_{ctd}) \text{ [kN]} \qquad (2)$$

where:

b_{eff}	Breadth of a web at the level of the center of gravity of a slab
h	Height of a web including the concrete cover on the top of LECA-blocks
$\alpha = l_x / l_{bpd} < 1.0$	Factor calculated according to SFS-EN 1992-1-1 clause 6.2.2
σ_{cp}	Compressive stress in a web at the level of the center of the gravity of a slab

(v) Shear capacity of longitudinal joints

The shear capacity of a longitudinal joint should be calculated by using formula (7) as an addition of the shear capacity of the recesses on the side of a slab (65x100x11 mm c/c 200) and friction resistance occurring on the side surface of the slab:

$$V_{Rdi} = 5 * V_{Rd,v} + V_{Rd,k} \text{ [kN/m]} \qquad (3)$$

Design shear capacity of the recesses may be calculated by using formula (4):

$$V_{Rd,v} = c * A_{c0} * f_{ctd} < 0.5 * \upsilon * f_{cd} * A_{c0} \text{ [kN/m]} \qquad (4)$$

where:

$c = 1.0$

$\upsilon = 0.6 * (1 - f_{ck} / 250)$

A_{c0}	Surface area of one recess (normally 6500 mm^2)
f_{ctd}	Design tensile strength of the joint concrete
f_{cd}	Design compressive strength of the joint concrete

Design friction resistance on the side surface may be calculated by using formula (5):

$$V_{Rd,k} = c * A_{c0} * f_{ctd} \text{ [kN/m]} \qquad (5)$$

where:

$c = 0.025$

A_{c0}	Area of the side surface with deducted total surface area of recesses (normally 194207 mm^2 in SL-270 and 144207 mm^2 in SL-220)
F_{ctd}	Design tensile strength of the joint concrete

In addition to the determination of the shear capacity of a longitudinal joint, the ability to transmit loads in transverse direction from recesses to the adjacent concrete web of a slab should be checked.

(vi) Shear capacity of transverse webs

Design shear capacity of transverse concrete webs (located between the ends of LECA-blocks) may be calculated by using formula (7):

$$V_{Rdj} = 0.25 * f_{ctd} * 1000 \text{ mm} * (h_f + h_j * b_j / s) \text{ [kN/m]} \qquad (6)$$

where:

f_{ctd}	Design tensile strength of the slab concrete
h_f	Thickness of a concrete cover on the top of LECA-blocks (normally 40 mm)
hj	Height of a transverse web (normally 210 mm in SL-270 and 160 mm in SL-220)
b_j	Breadth of a transverse web (normally 60 mm)
s	Spacing of transverse webs (normally 600 mm)

Tensile stresses caused by transverse bending moments should be limited due to insufficient transverse reinforcement of Luja-Superlaatta.

3.3.3 Serviceability limit state

In the SLS design, lightweight concrete (LECA-blocks) is treated only as loads and not assumed as a part of the slab structure. If the lightweight concrete is considered, its effect should be scaled by the relation of the elastic modulus of normal concrete and lightweight concrete. In the determination of the average bending tensile strength, the depth of the structure cross section may be taken according to formula (3.23).

(i) Deflections

The rigidity caused by the possible cracking of the structure should be considered in the calculation of deflections. Eurocode does not unambiguously set the limit values for the deflections of concrete structures. However, the following principles should be respected in the structural design of Luja-Superlaatta:

- Maximum deflection caused by loading is limited to L / 200.
- If a slab is designed to carry brittle structures that may crack by bending downwards, such as brick walls or glazed structures, the maximum deflection is limited to L / 500.

– Maximum deflection of slab supports is limited to L / 250.

Deflections are checked with the standard load combination. Calculation of the deflections should also cover the situation when slabs are used as a support for the storage of other elements during the construction.

(ii) Cracks

Slabs should be reinforced in a way that cracks do not appear due to bending moments. However, if the cracking occurs, the permitted crack width must be limited in accordance with the corresponding exposure class of concrete. In case of a long-term load combination, tensile stresses may occur only in concrete with XC0 and XC1 exposure classes.

(iii) Fire design

In the fire design, the effect of the improved fire resistance caused by LECA-material is not considered. The blocks are treated as a part of a solid section and, thus, affect the thickness of a concrete cover over reinforcing steel. The required concrete cover thickness may be calculated according to SFS-EN 1992-1-2 Table 5.10. If the designed critical temperature of a rebar (θ_{cr}) is lower than 500 °C, the concrete cover thickness measured from the center of the rebar must be increased by using formula (7):

$$\Delta a = 0{,}1 \text{ mm} * (500 - \theta_{cr}) \qquad (7)$$

where:

Δa Change of the concrete cover thickness

3.4 Design process and interaction between parties

In this section, the design order and interaction between structural designers and manufacturer during the design process are defined.

3.4.1 Design principles

(i) Design process in brief

In most cases, the bearing capacity of Luja-Superlaatta slabs and reinforcing schemes will be designed by Lujabetoni Oy or a third-party company. The goal of a structural designer is to set the initial geometrical parameters of the slabs, model cuts and recesses, and insert required embeds, parts, and additional reinforcement that he or she is responsible for. Also, the designer should produce plan drawings with corresponding loads, structural types, and overall dimensions of the slabs. Then, the plan drawings and a Tekla Structures model are provided to Lujabetoni Oy, and the slabs are finalized with main reinforcement, wet room area

detailing, HVAC integrations, and other required modifications. After that, element drawings are produced, and both the drawings and BIM-data needed for the LACM are sent to a factory.

(ii) Design conditions

Depending on the available BIM-software, project confidentiality, client requirements, and other factors, the design process and principles may vary case-by-case (see Table 1). Below are considered three most probable design conditions that may occur in Finland:

a) Project is entirely designed using Tekla Structures.
b) Project is designed using Tekla Structures, but the model sharing is restricted due to the project confidentiality.
c) Project is designed using AutoCAD only.

Table 1. Required data from structural designers in relation to the design conditions:

Requirements	Conditions		
	A	B	C
Model	X		
Plan drawings	X	X	X
Element drawings		X	X

*the examples of plan and element drawings may be found in Appendix 2

3.4.2 Preliminary statements

(i) Requirements for the building design

Building design should respect the geometry of Luja-Superlaatta and may be altered in accordance with its features:

- The building layout should be designed to fit 3 m wide slabs as efficiently as possible.
- Storey and overall building height should be selected in accordance with 270 mm thick slabs used in the intermediate floors and 220 mm thick slabs used in the ground floors and roofs.
- Wet rooms, such as bathrooms and saunas, should be designed in accordance with the corresponding integration principles and slab capabilities.
- Other building structures should be designed to contribute with Luja-Superlaatta. For example, Luja-Superlaatta and Hormielementti.
- Some design limitations applied to other types of slabs may be modified due to the advantages and disadvantages of Luja-Superlaatta. For example, good sound-proofing, high fire resistance, possibility to built-in bathroom equipment, but relatively disputable usage of short-spanning precast slabs and decreased bearing capacity of slabs under wet room areas.

(ii) Segregation of duties

The parties, structural designer and manufacturer, should settle the method and principles of the data sharing and approve the arrangement and completion sequence of design assignments (see Table 2). Practically, the method and principles of the data sharing are dependent on the design conditions, but the design assignments may be arranged and sequenced according to the example presented below:

a) Set the initial geometrical parameters of slabs including holes, cuts, and recesses, but excluding the detailing of wet room areas and HVAC integrations.
b) Design connections and corresponding reinforcement.
c) Design embeds by the exclusion of LECA-blocks, HVAC integrations, and lifting embeds.
d) Design anchoring reinforcement for embeds by the exclusion of connecting loops and lifting embeds.
e) Produce plan drawings with corresponding loads, structural types, and overall dimensions of slabs.
f) Design prestressed strands, transverse rebars, edge reinforcement, anchoring reinforcement for connecting loops, and other required internal reinforcement.
g) Design LECA-blocks.
h) Design HVAC integrations and wet room areas.
i) Design lifting embeds and corresponding anchoring reinforcement.

Table 2. Arrangement of the design assignments in time order from left to right:

Sides	Assignments								
	A	B	C	D	E	F	G	H	I
Designer	X	X	X	X	X				
Manufacturer						X	X	X	X
Timeline									

4 CASE STUDY

The goal of the practical part of the thesis is to study the basic principles and methods of the modeling process of structures comprised of Luja-Superlaatta elements. As far as the most popular BIM-software among structural designers in Finland is the Tekla Structures program, its possibilities and features are also used and tightly bounded to the production process of Luja-Superlaatta. Therefore, the study will mostly focus on the testing and analysis of the SL-tool modeling capability in the Tekla Structures environment and development of possible compatibilities, improvements, and expansions as well as the collecting of various detailing tools and integrations that may be efficiently used in the combination with the SL-tool.

4.1 General information about the case study

The basic data about the building model and versions of the modeling program and SL-tool used for the further tests and analysis is collected in this section.

4.1.1 Building case

The testing and analysis are done by using the building model of the nine-storey (including the ground floor and roof machinery floor) residential building located in Espoo, Finland and designed to the exploitation period of 50 years. The consequence class of the building is taken as CC3 in respect to the high consequence for loss of human life and very great economic, social, and environmental consequences.

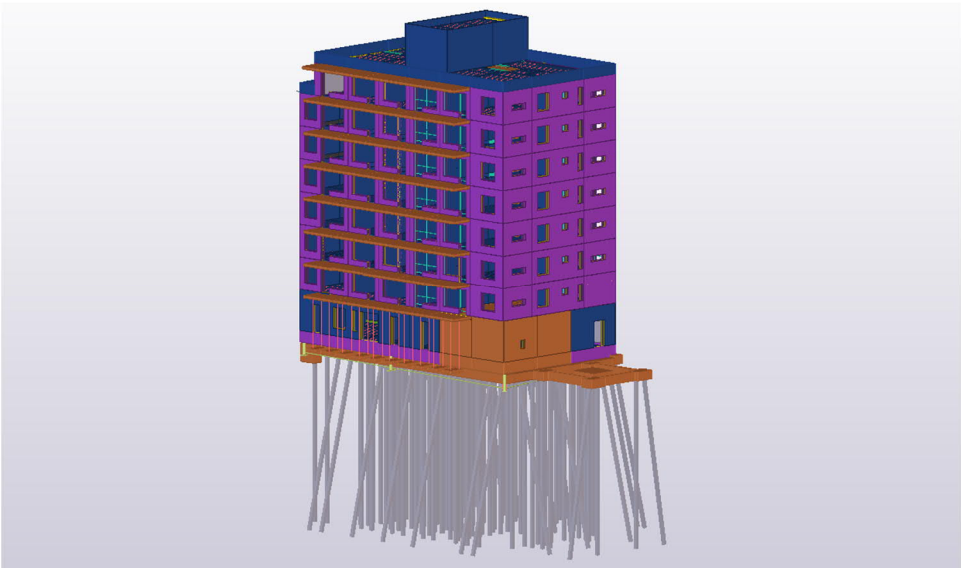

Figure 97. Building model (Tekla Structures model snapshot)

4.1.2 Luja-Superlaatta

The standard SL-220 slab version is used in the ground floor and the roof of the machinery floor. The standard SL-270 slab version is used in all other cases. The concrete and steel reinforcement grades of the slab elements and structures comprised of Luja-Superlaatta elements are selected according to the standard material grades of Luja-Superlaatta:

- Normal concrete grade: C25/30
- Lightweight concrete grade: C2.5/3
- Self-compacting concrete grade: C55/67
- Concrete grade for wet rooms: C55/67
- Prestressed steel reinforcement: J12,5 (93 mm^2) 1630/1860 N/mm^2
- Non-stressed steel reinforcement: B500B

4.1.3 Modeling configurations

(i) Tekla Structures

- Program version: 2017 Service Pack 9
- Environment: POYRY fin
- Configurations: Full and Precast Concrete Detailing

(ii) SL-tool

- Plugin version: 210.1.18.0
- KEVYTSORAHARKKO (LECA-block) material density: 1000 kg/m^3

4.2 Modeling methods and rules

The modeling methods of Luja-Superlaatta in Tekla Structures are similar to those of hollow cores. The basic working tool for the creation of solid slabs is the floor layout component (see section 2.4.5(iv)) that may be set in accordance with the Luja-Superlaatta geometry and dimensional limits. Alternatively, the slabs may be modeled as single beams with the SL-profile, or with the help of other similar tools, such as Floor Tool. However, LECA-blocks are not provided in the floor layout or other tools, and they should be modeled with the help of the SL-tool plugin. The plugin and corresponding profiles of the Luja-Superlaatta slab and LECA-blocks may be downloaded from the Tekla Warehouse.

This section covers the principles of the modeling process discovered during the tests and analysis of the SL-tool and discussions with the representatives from Lujabetoni Oy. It includes general recommendations and requirements for the modeling by using the floor layout component and the SL-tool.

4.2.1 Floor layout

(i) Creation

The first step before start using the floor layout is to set its properties according to the current slab type and building case. It is recommended to set the dimensional limits in the Advanced tab of the floor layout in the same manner as for a prestressed solid slab since the geometry limitations of slabs with LECA-blocks are controlled by the SL-tool. The production limitations of Luja-Superlaatta and dimensional limits for specific cases should be discussed directly with Lujabetoni Oy. The example of the floor layout settings may be found in Appendix 1. Once all properties are set, the user may “save as” them in the model folder for further use and hit “Apply” (see section 2.4.5(ii)). Now, they become the current properties and will be used for all objects that will be modeled by using the floor layout.

The next step is to create and position slabs in correlation with their supports and the building structure. It may be done by binding the input polygon lines of the floor layout to the edges of the neighbouring elements and further adjustment of gaps and supporting areas by the direct modification of the offsets at the floor layout boundaries or via the Default offsets tab of the property dialog box. Also, the floor layout component may be used for a number of spans since it is possible to split the component with break lines later.

(ii) Direct modification

When the floor layout is created, the slabs may be further modified in the Direct modification mode by the creation and modification of the openings, break lines, input polygons, offsets of layers, part widths and profiles, seam gaps, seam directions, slab order, and detailing component strips of the floor layout component. It should be considered that wet room areas are limited to the width of a slab and cannot extend beyond its boundaries. However, if a sauna is designed as a part of a bathroom, it is permissible to locate the sauna room entirely onto a neighbouring slab. Thus, the seams, slab direction, and slab geometry should be designed and modeled fulfilling that requirement.

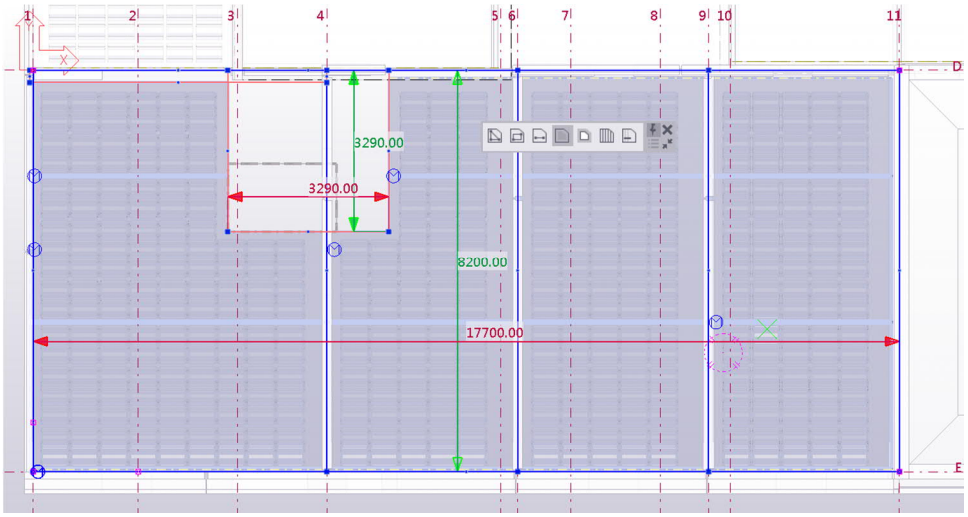

Figure 98. Floor layout component in the direct modification mode (Tekla Structures model snapshot)

If a slab of full width does not fit entirely between two neighbouring structures, the floor layout component automatically applies the Line cut to one side of such slabs by default cutting it with a straight line. However, in comparison with hollow cores, Luja-Superlaatta slabs may be produced with unbroken sides not depending on the width of the slabs. Therefore, the default profile must be set to “LUJASL270*[W]” ensuring that the sides are not cut and modeled correctly.

4.2.2 SL-tool

(i) Creation and modification

The SL-tool is a plugin for Tekla Structures that allows for the creation and arrangement of LECA-blocks inside beam objects. The tool may be found in the Applications & components catalog as the SUPERLAATTA_SL-DECK. The example of the tool settings may be found in Appendix 1.

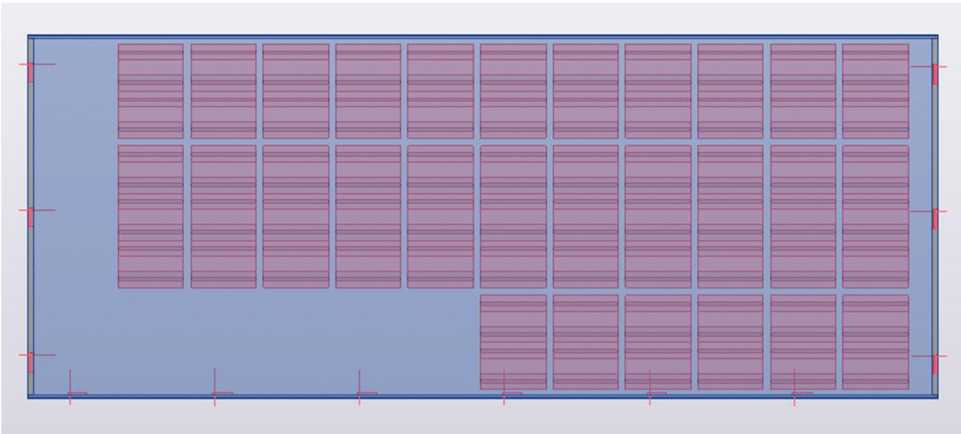

Figure 99. Luja-Superlaatta with LECA-blocks (Tekla Structures model snapshot)

The blocks are created automatically by hitting the corresponding object, while the tool is active. It is possible to model the blocks as a group of short beam objects (multiple blocks in one row) or long beam objects (single beam object representing several blocks). The blocks are always modeled with the full length and width and cannot be broken or cut in any way. If a block is collided with any built-in part or is unacceptably close to the edge of the object, it must be left out. It should be considered that the blocks are re-created each time the properties or length of the corresponding object is changed. If the blocks were created with the floor layout, they will be re-created each time the floor layout component is modified via the property dialog box or direct modification mode. Explosion of the block groups and direct modification of single blocks are forbidden since such objects become corrupted and cannot be used for the further slab production.

(ii) Positioning and omission

The SL-tool may be set to automatically omit blocks in the location of openings. However, for other cases, the 3D panel should be used. With the help of the 3D panel it is possible to manually omit or pick blocks, but it is not possible to shift the blocks. It is recommended to find the best position for block groups in each individual slab by changing the offset values in the property dialog box of the SL-tool. The blocks are always positioned along a slab with the Start lane offset as the main rule, but the End lane offset is also respected. Across slabs, it is always advisable to set the Right or Left offsets since the Middle offset makes the strand design much more complicated.

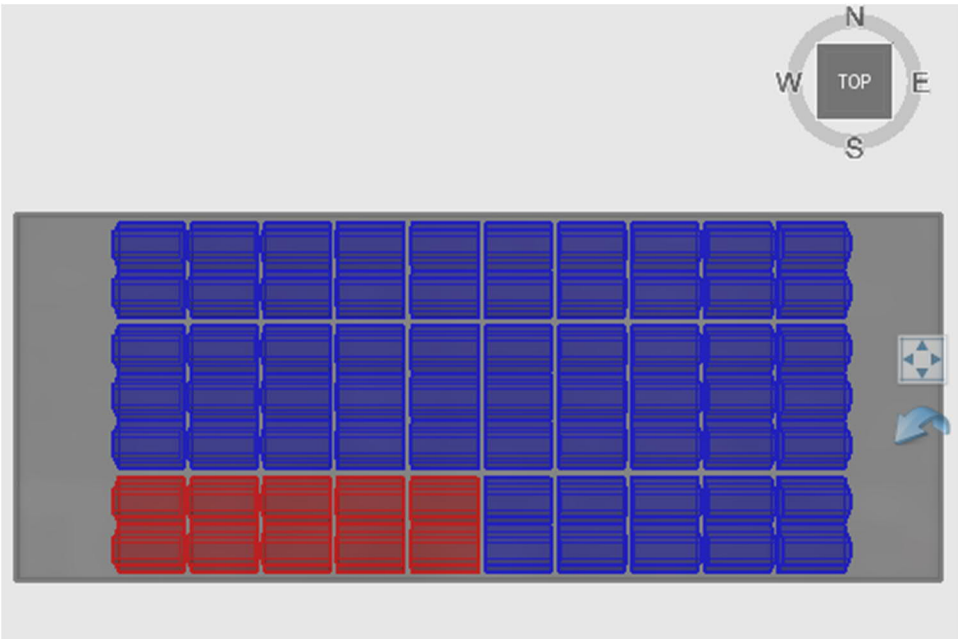

Figure 100. 3D pan of the SL-tool property dialog box (Tekla Structures model snapshot)

If the SL-tool does not allow for the creation and picking of blocks in narrow zones of slabs, this error may be fixed with a negative lane offset value as it is represented in Figure 101. The problem will be described in more detail in section 4.3.1.

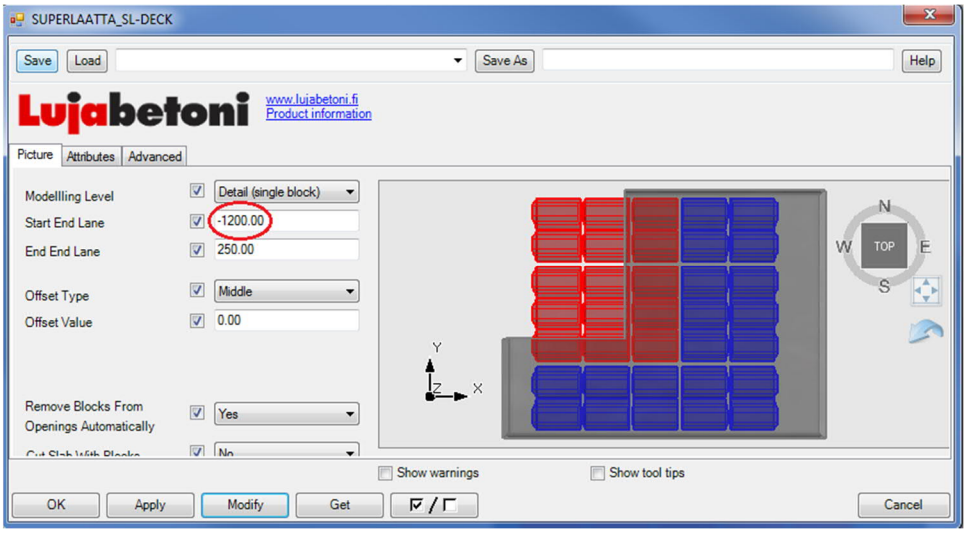

Figure 101. Fixing the block creation problem with a negative lane offset (Tekla Structures model snapshot)

It is also possible to apply the SL-tool to the same object several times if two or more block groups with different offsets should be incorporated into one object, for example, to increase the number of blocks. However, all blocks must have the same profile, length, and height, and any differences between the blocks within one slab are unacceptable. This option is still under development and is not fully realized at the production phase. Therefore, it is not advisable to use it as a preferred way of modeling.

(iii) Cuts and antimaterial

The SL-tool may also be set to Part cut the areas of the corresponding object collided with the blocks created inside. However, the cuts may trigger the Solid error occurring by the overlay of multiple cuts in one place and resulting with the both object and plugin representation bugs. Therefore, it is recommended to create LECA-blocks without cuts and add the cuts only if needed and when the final geometry of the unit and all corresponding built-in parts are modeled. The solid error may be fixed by saving the current SL-tool attributes, deleting it from a slab, and applying the tool again.

Alternatively, the density of the block material may be set to a negative value, for example, -1400 kg/m^3 (approximately equalizes the weight of the unit to the standard weight of a slab with blocks), in order to achieve the correct final weight of the unit. The value may be changed in the Material catalogue of Tekla Structures. However, in that case, the center

of gravity of the unit may be determined incorrectly by Tekla Structures, which will affect the design of lifting anchors. Also, this method is not recommended due to the incorrect geometry representation of such slabs in drawings if the blocks are hidden or filtered out. The best option at the moment is to create cuts and try to avoid the solid error.

4.2.3 Block modeling using the floor layout component

(i) Detailing tab

LECA-blocks may be created automatically in all slabs included into one component by choosing the SUPERLAATTA_SL-DECK detailing component from the catalogue and setting corresponding attributes in the Detailing tab of the floor layout property dialog box. However, these attributes are applied for all slabs and cannot be changed individually in each slab. Therefore, the most efficient method to model the blocks in a row of similar slabs is to combine detailing component strips of the floor layout and the SL-tool.

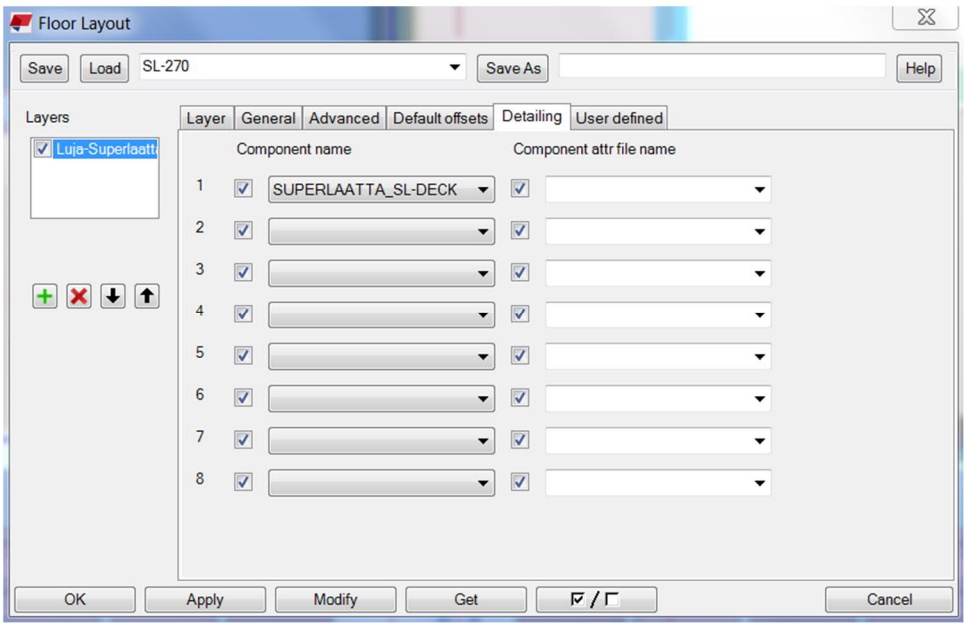

Figure 102. Detailing tab of the floor layout component property dialog box (Tekla Structures program snapshot)

(ii) Detailing component strips of the floor layout

The strips may be used to add or modify detailing components in certain slabs of the floor layout. Each strip creates only one detailing component in each slab and applies the same component attributes to all slabs that it overlaps. The attributes used in the strips are the settings that were previously saved to a model, and they cannot be changed via the strips. Therefore, in places requiring individual attributes, for example, omission and picking of LECA-blocks on the 3D panel, the SL-tool should be used.

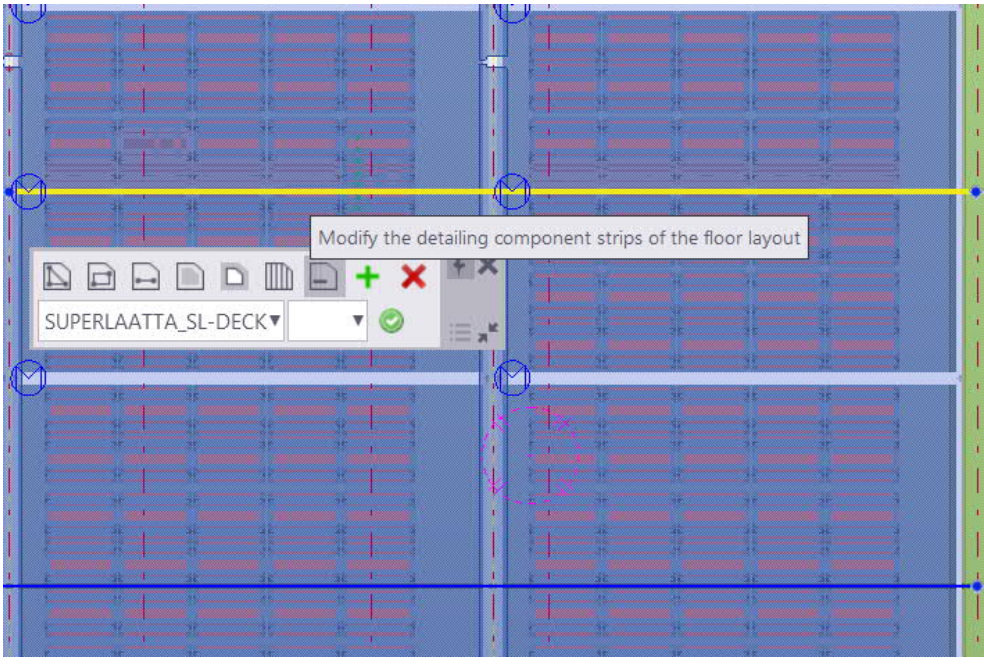

Figure 103. Detailing component strips of the floor layout (Tekla Structures snapshot)

4.3 Analysis of the SL-tool modeling capability

This section is the review of the SL-tool as a modeling instrument developed for the creation of LECA-blocks based on the analysis from the point of view of an average Tekla Structures user. The most important author's notes and comments about the tool capability and completeness are presented throughout this section.

4.3.1 Settings

(i) Presets

Generally, there is no any need in presets. However, the density of the LECA-block material may be changed via the material catalogue depending on the concrete grade of the blocks. Also, the density may be set to a negative value in order to keep the same unit weight, while getting rid of numerous cuts that slow down the SL-tool and may trigger the solid error. Setting the negative density is not recommended due to problems described in section 4.2.2(iii).

(ii) Property dialog box

The property dialog box has a variety of options, but the adjustment of the block group position along a slab is not provided. The blocks are always positioned by using the start lane offset value, which is the modeling limitation, but not the positioning setting. The situation becomes quite complicated if a block group should be positioned directly

in the middle of a slab or with an offset from the other end. The example of such an issue is represented in Figure 104, where in order to position the blocks with 250 mm offset from the right end, the offset 660 mm from the left end should be set.

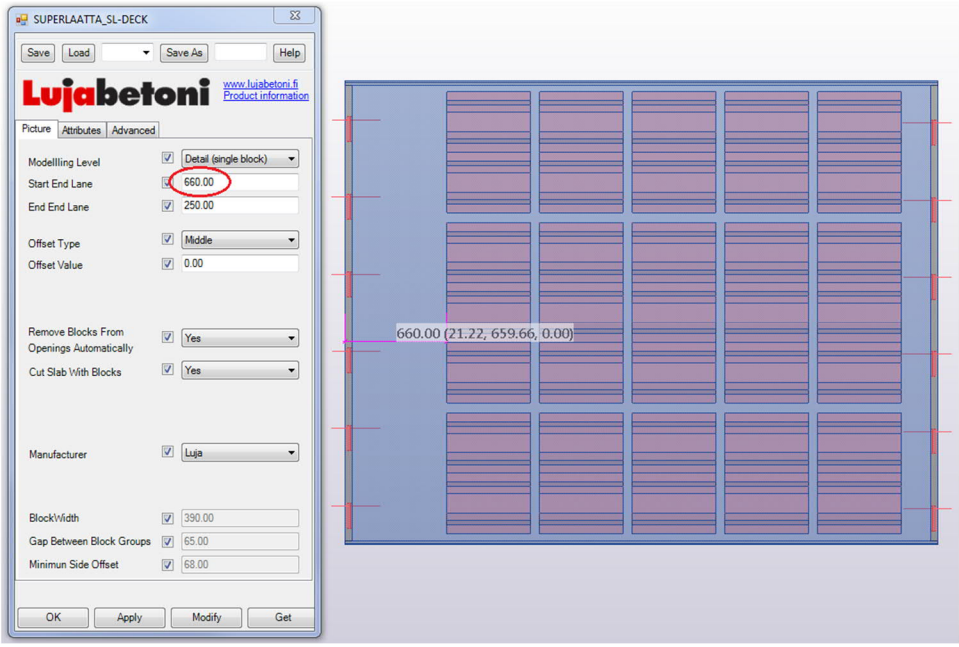

Figure 104. Example of the positioning issue (Tekla Structures model snapshot)

To ease the modeling, the offset limitations may be set the same for all slabs and then hidden in a way that the user is able to adjust only the position. Alternatively, both values may be provided.

(iii) 3D panel

The 3D panel is the main tool that is used for the precise modeling of blocks mostly at the final stage of the slab design. It allows for the manual control of the block map by leaving out and picking the blocks as well as the view rotation. However, there are some flaws, which limit the SL-tool possibilities:

a) First, if there are narrow zones in a slab, the SL-tool does not allow for picking blocks there. Although the minimal width of slabs with LECA-blocks is limited to 1 m, the tool occasionally does not allow for picking blocks when the width is larger. This happens only near cuts or openings.

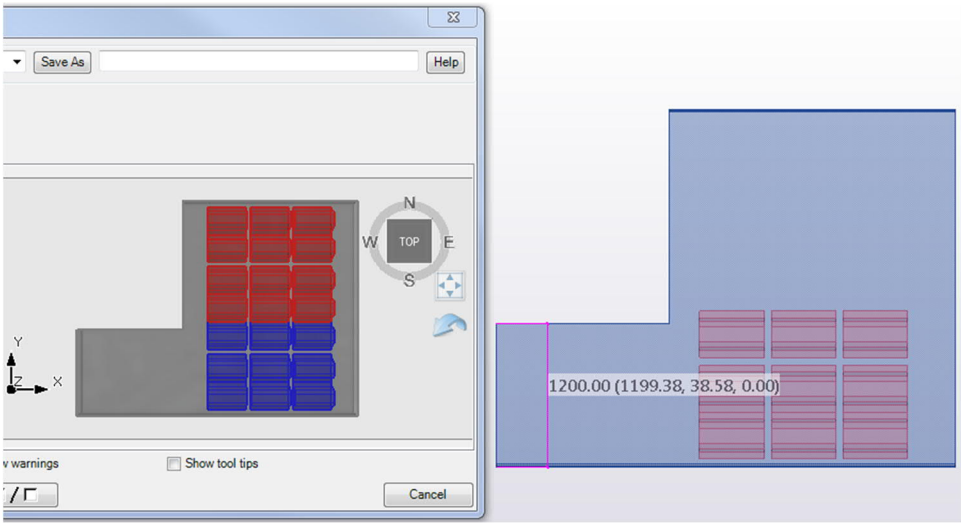

Figure 105. Slab with the cut and 1200 mm wide part (Tekla Structures model snapshot)

b) Second, the SL-tool does not allow for splitting one block group into smaller block groups with their own settings, for example, unique offsets or block shapes. This option may allow for the increase of the number of blocks in slabs by the shift of some block groups or individual blocks within one component or by changing the block shape to fit between specific boundaries. On the other hand, such an option will also cause problems in the production phase because the LACM is not set yet to handle custom blocks spacings and shapes (see section 4.2.2(ii)).

4.3.2 SL-tool compatibility with beam objects and floor layout component

(i) General

The modeling methods and rules are comprehensively described in section 4.2.2. The SL-tool does not work with any objects by the exclusion of beam objects. Therefore, only the standard beam tool and other tools with the capability to create beams with the corresponding profile, such as the floor layout, are compatible and analysed below. There is no any great difference between them in the process of the block creation, and, therefore, the revealed errors and flaws are common for all of them:

a) If the SL-tool is set to “cut slabs with blocks”, the solid error occurs quite often (see section 4.2.2(iii)). This happens due to the overlapping volumes and faces of collided cut parts. For example, in slabs with openings, line cuts, or part cuts.

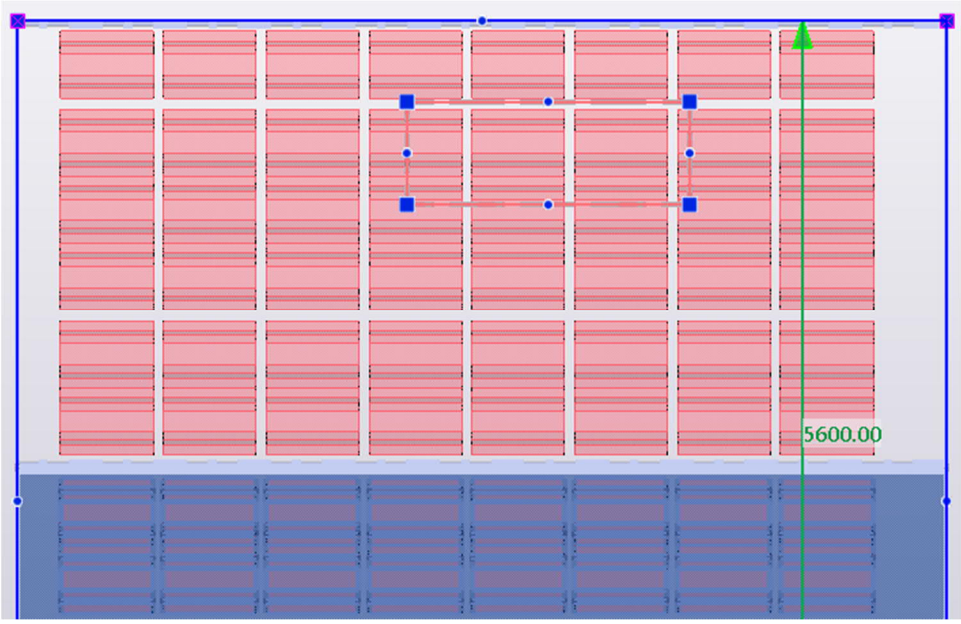

Figure 106. Solid error (Tekla Structures model snapshot)

b) The SL-tool occasionally ignores small openings and does not automatically leave out blocks in their locations. However, it may be easily fixed by the manual omission of the blocks on the 3D panel.

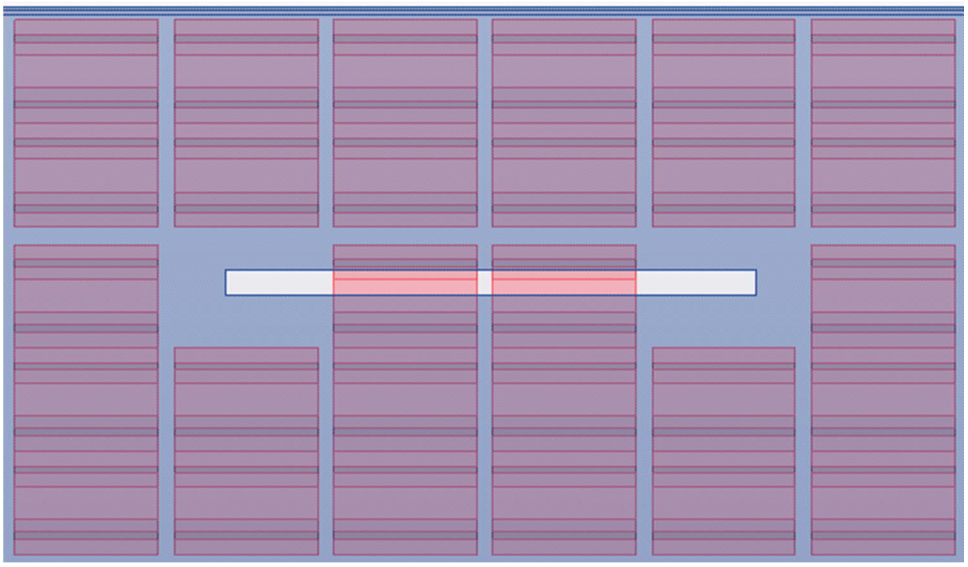

Figure 107. Small opening made by using the floor layout (Tekla Structures model snapshot)

c) Blocks are not updated automatically when slabs are modified with the part cut, polygon cut, line cut, or fitting.

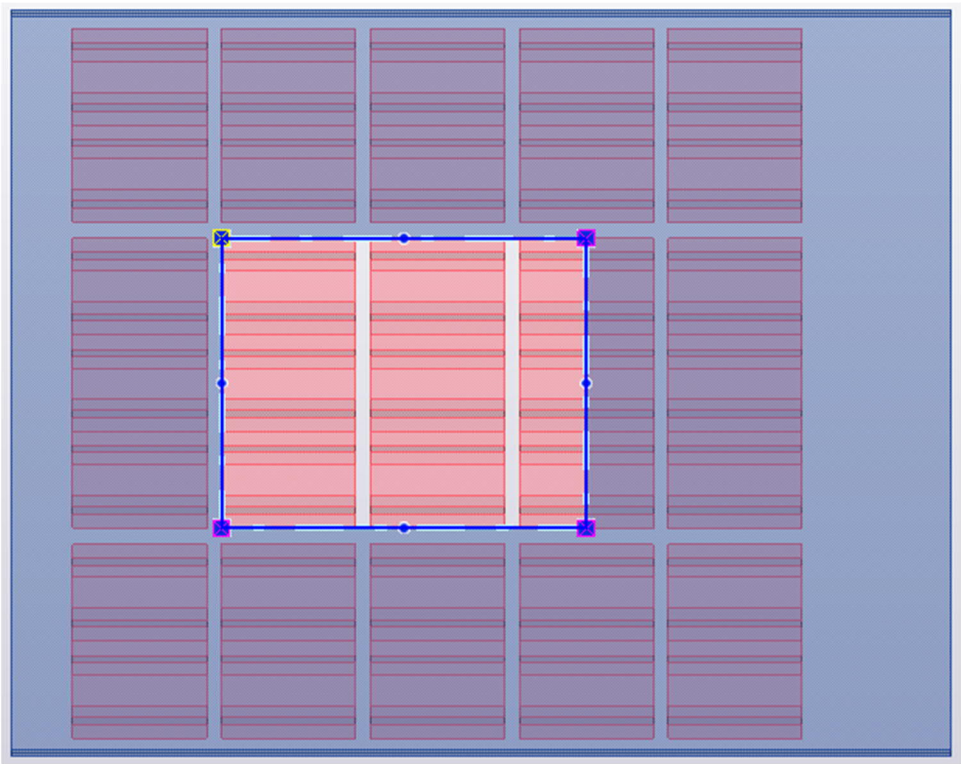

Figure 108. Polygon cut applied to the object with blocks (Tekla Structures model snapshot)

d) Blocks are not left out when they are collided with part cuts not passing entirely throughout slabs. The possibility to automatically leave out blocks in such places if they do not fit may ease the modeling process, for example, when the part cut is applied to IFC objects converted into native Tekla Structures objects like it is represented in Figure 109.

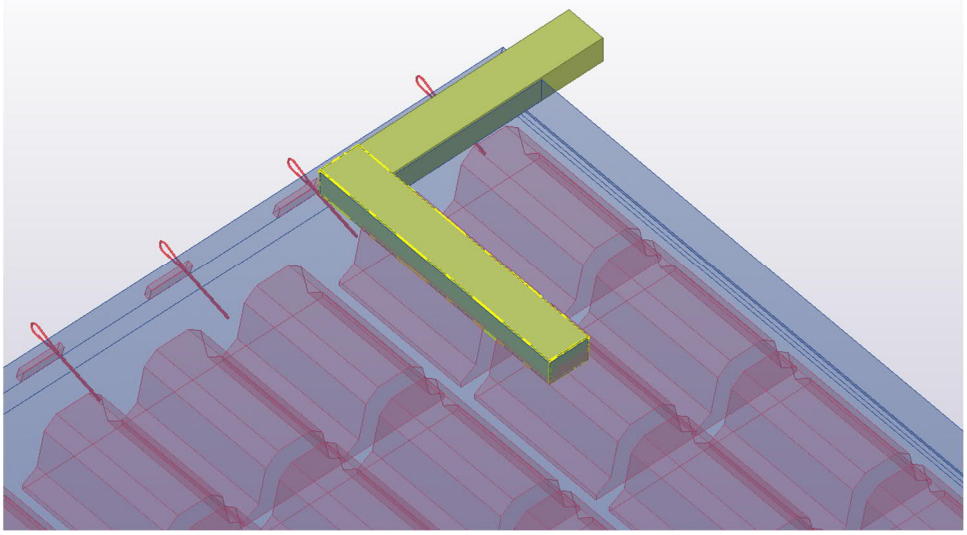

Figure 109. Part cut applied to the object with blocks by using the converted IFC object (Tekla Structures model snapshot)

(ii) Floor layout

The method described in section 4.2.3 may be very efficient for floors with a great number of similar slabs or when blocks should be modeled fast, but poorly. However, at the moment, this option does not work correctly since it is not possible to select saved attributes on the direct modification panel and in the detailing tab of the property dialog box.

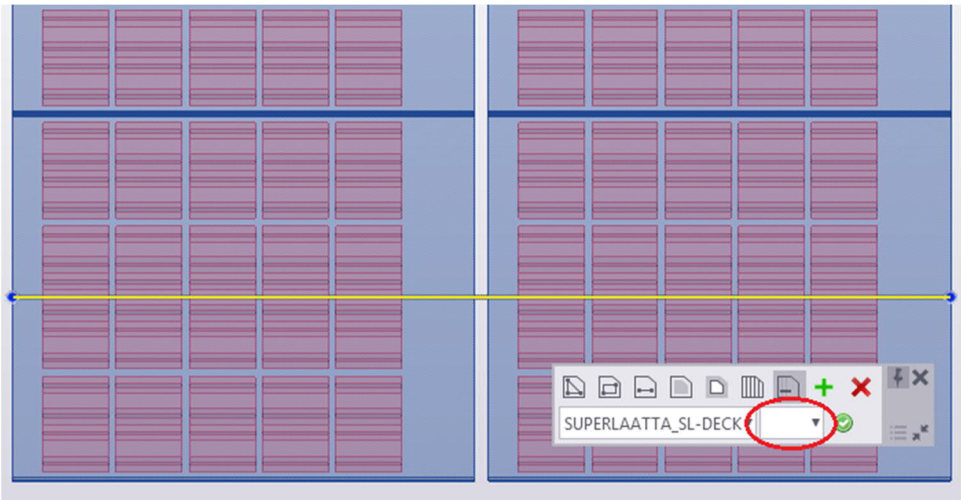

Figure 110. Empty attribute box of the direct modification panel (Tekla Structures model snapshot)

4.4 Analysis of compatible detailing tools and integrations

In most cases, detailing tools will be applied and bounded directly to a slab, and, therefore, they will not affect block objects created with the SL-tool by the exception of tools that change the slab geometry. On the other hand, some of them depend on the slab geometry and properties, which should be considered while setting the SL-tool to cut slabs with blocks. Below are presented the most appropriate tools that are compatible with various combinations of the SL-tool settings.

4.4.1 Geometry

(i) Skewed ends

Standard versions of Luja-Superlaatta are usually produced with skewed ends as represented in Figure 111. In Tekla Structures, such ends may be modeled in several ways:

a) with line cuts
b) by using a triangular-sectioned concrete beam profile as a cutting part
c) with chamfers

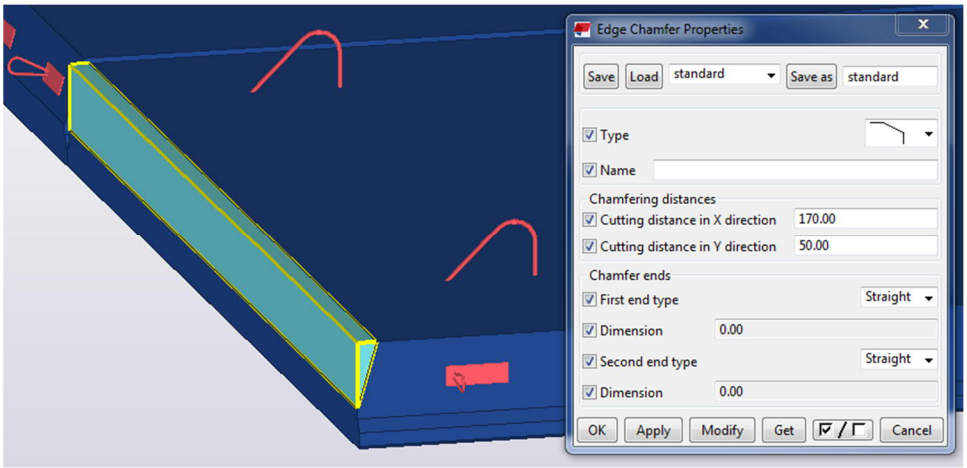

Figure 111. Skewed ends modeled with chamfers (Tekla Structures model snapshot)

The methods listed above may be applied only to individual slabs and cannot be used in the detailing tab of the floor layout as a detailing component. It is recommended to use chamfers due to the possibility to easily adjust, model, and copy them as well as to save different chamfer attributes and quickly select the ones needed. However, such skewed ends affect the lane offset of blocks created with the SL-tool. For example, when the lane offset is set to be 250 mm, the real offset in the model exceeds 260 mm as it is presented in Figure 112.

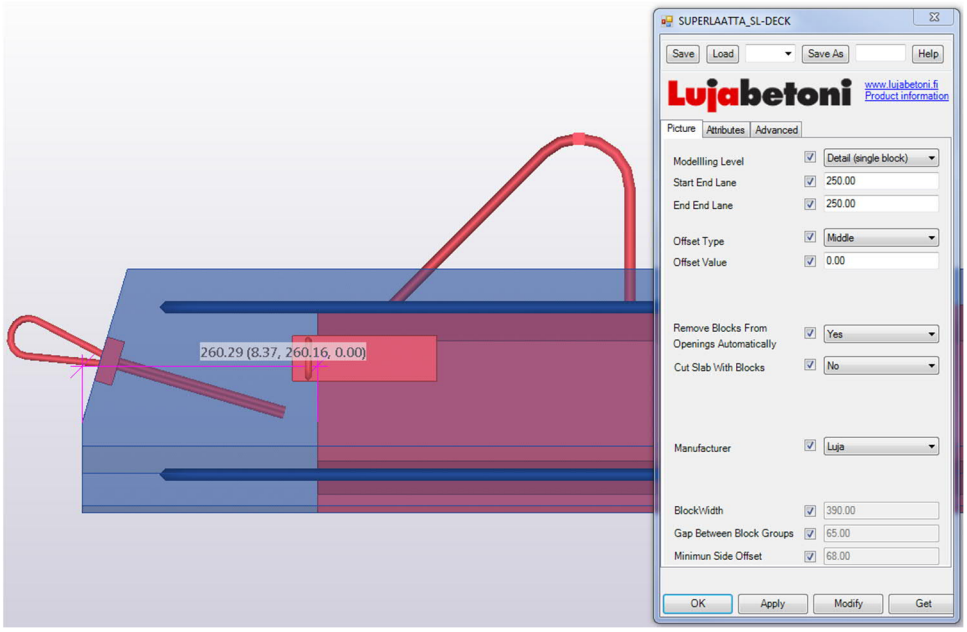

Figure 112. Increased lane offset (Tekla Structures model snapshot)

(ii) Openings and cuts

To create openings, recesses, or cuts in individual beam objects, the Polygon cut and Part cut, presented on the Edit tab of the ribbon, may be used. When modeling with the floor layout, openings may be created by

using the direct modification panel. Unfortunately, circular openings are not provided by the floor layout, and it is recommended to use a column or beam object as a cutting part to create such openings. It should be noted that most tools and integrations that work with hollow core slabs, such as the Hollowcore Opening Tool and series of Hollow Core Recesses, will not work with Luja-Superlaatta.

(iii) Wet room gradients

Wet room gradients may be modeled by using slab objects and part cuts. The number and shape of the objects depends on the difficulty of the gradient. Figure 113 represents a simple screed with two different slopes going from the boundaries of external area to the boundaries of the internal area and then to the center. The piping and other wet room equipment may be modeled with custom components or, alternatively, by importing from other modeling software, such as MagiCAD.

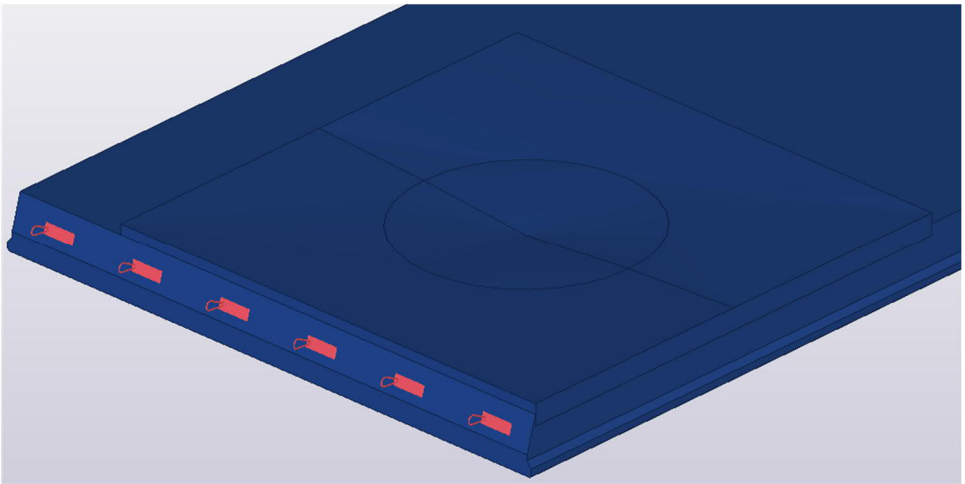

Figure 113. Luja-Superlaatta with the wet room zone (Tekla Structures model snapshot)

The modeling method consists of several steps:

a) Model a 55 mm thick slab according to architectural drawings.
b) Position slab in a way that the top face of the modeled slab matches the top face of Luja-Superlaatta.
c) Use the slab as a cutting part of Luja-Superlaatta.
d) Split the slab or model new slabs in accordance with the required geometry of the gradient (slabs may be split by using the Split tool at the Edit tab of the ribbon).
e) Create new handles and modify the properties of corresponding handles in accordance with the required geometry of the gradient (see section 2.4.5(iii)).

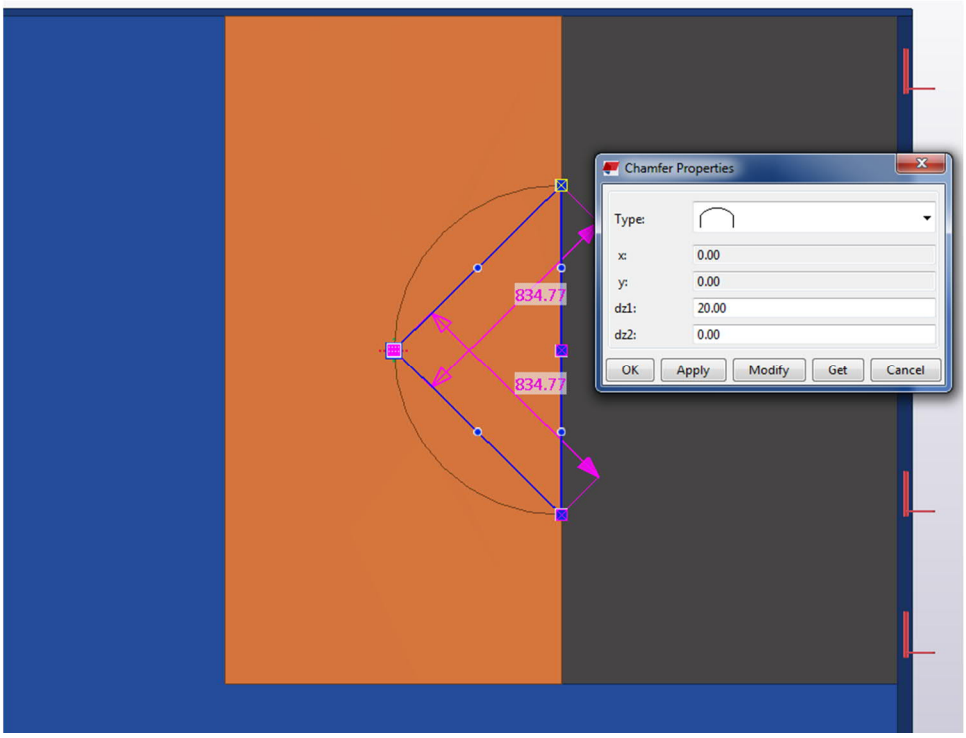

Figure 114. Handle modification (Tekla Structures model snapshot)

f) Combine the slabs with Luja-Superlaatta into one object by using the Attach to part tool at the Added material dropdown list of the Edit tab.

4.4.2 Reinforcement and embeds

(i) Normal reinforcement

Any normal non-stressed reinforcement, including transverse reinforcement, reinforcement in the solid ends of slabs, opening reinforcement, punching shear reinforcement, longitudinal and transverse joint reinforcement, reinforcement in connections to neighbouring structures, extra reinforcement for cast-in parts, and other specific reinforcement may be modeled by using the standard Bar or Bar group tools that may be found on the Concrete tab of the ribbon. Although the reinforcement design is usually done by Lujabetoni Oy or other third-party companies, some sketch rebars may be added in order to check the permissible area for cast-in parts and their binding to the reinforcing schemes of slabs.

(ii) Strands

To create prestressed strands, it is recommended to use either the Reinforcement Strand Layout (66) or Hollowcore reinforcement strands (60). Both provide the possibility to create a custom strand layout, but the Reinforcement Strand Layout (66) also allows for various strand profiles.

Alternatively, the SL-Deck_StrandPattern tool developed by Lujabetoni Oy may be used. It is capable to model strands in accordance with the SL-tool settings and has a variety of standard strand pattern layouts. Also, it is provided with the 3D panel working in the same manner as in the SL-tool. However, the SL-strand tool is not uploaded to the Tekla Warehouse at the moment, and, therefore, it should be asked directly from Lujabetoni Oy.

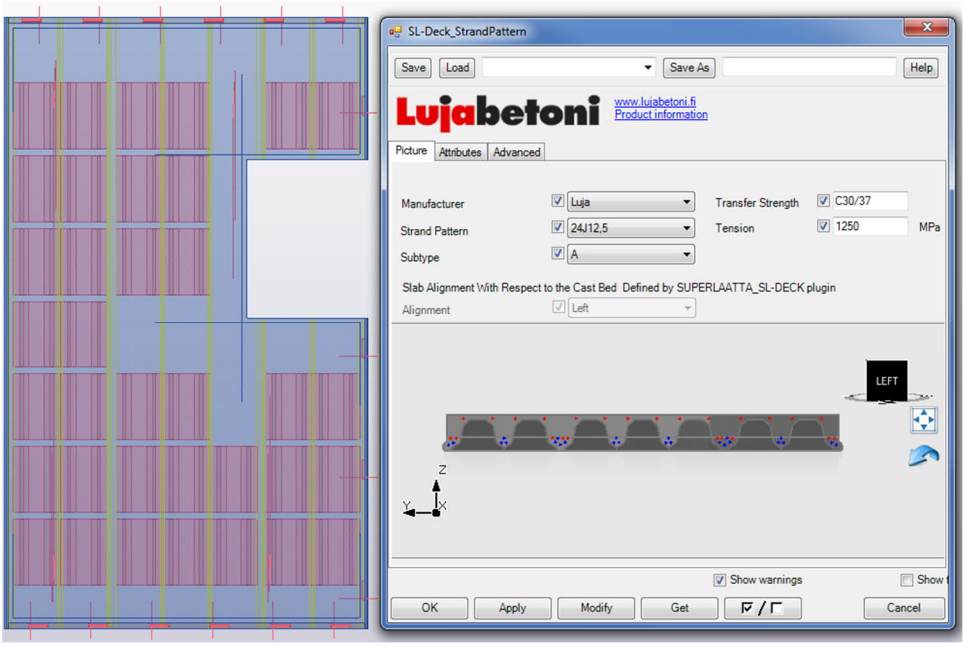

Figure 115. SL-Deck_StrandPattern tool (Tekla Structures snapshot)

(iii) Connecting loops

Connecting loops are usually placed at all four sides of slabs. They may be inserted either one by one or with the help of the Wall Groove Seam Detail component. This component inserts loops and has many options including the possibility to set the spacing and depth position of the loops as well as to add joint reinforcement. However, it cannot insert loops at planes with an inclination to the main plane, such as the skewed ends of slabs. Therefore, it is recommended to model a custom connecting loop with the corresponding inclination and combine it into a custom Tekla Structures component, which later may be selected in the property dialog box of the Wall Groove Seam Detail component instead of standard loops. Also, the Wall Groove Seam Detail component automatically cuts the edge, where it inserts the loops, to make it plain. Therefore, when loops are modeled, the component should be exploded and excess cut deleted in order to keep the correct shape of the slab sides.

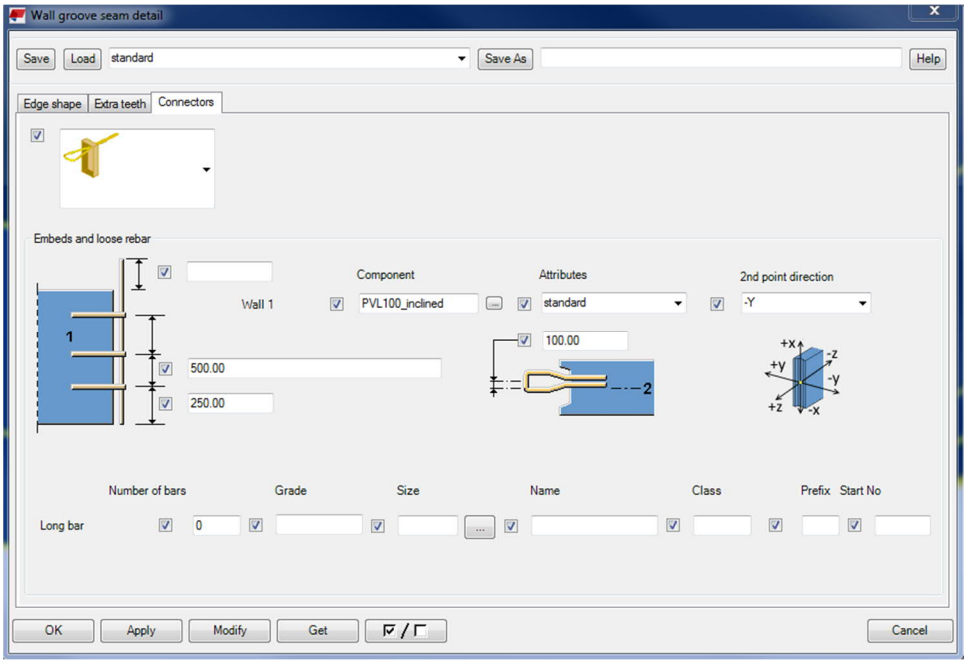

Figure 116. Wall Groove Seam Detail component settings with the inclined PVL-loop custom component (Tekla Structures model snapshot)

(iv) Lifting loops

Lifting loops or other similar lifting equipment may be modeled by using the Lifting Inserts component. Lifting loop strands must be inserted directly between LECA-blocks and not colliding with them. Since the default Slab tab does not match the required positioning of lifting loops due to the insertion of them directed to the center of gravity point and across the blocks, it is recommended to use the Picture tab that allows for the insertion of the loops directed along slabs. However, it is possible to insert only two loops using that tab, and, therefore, the component should be applied twice. If, for some reason, one of the loops should be modeled in a different axis from the origin or the shape of the lifting loop strand should be modified, the component may be exploded and the corresponding loop adjusted manually.

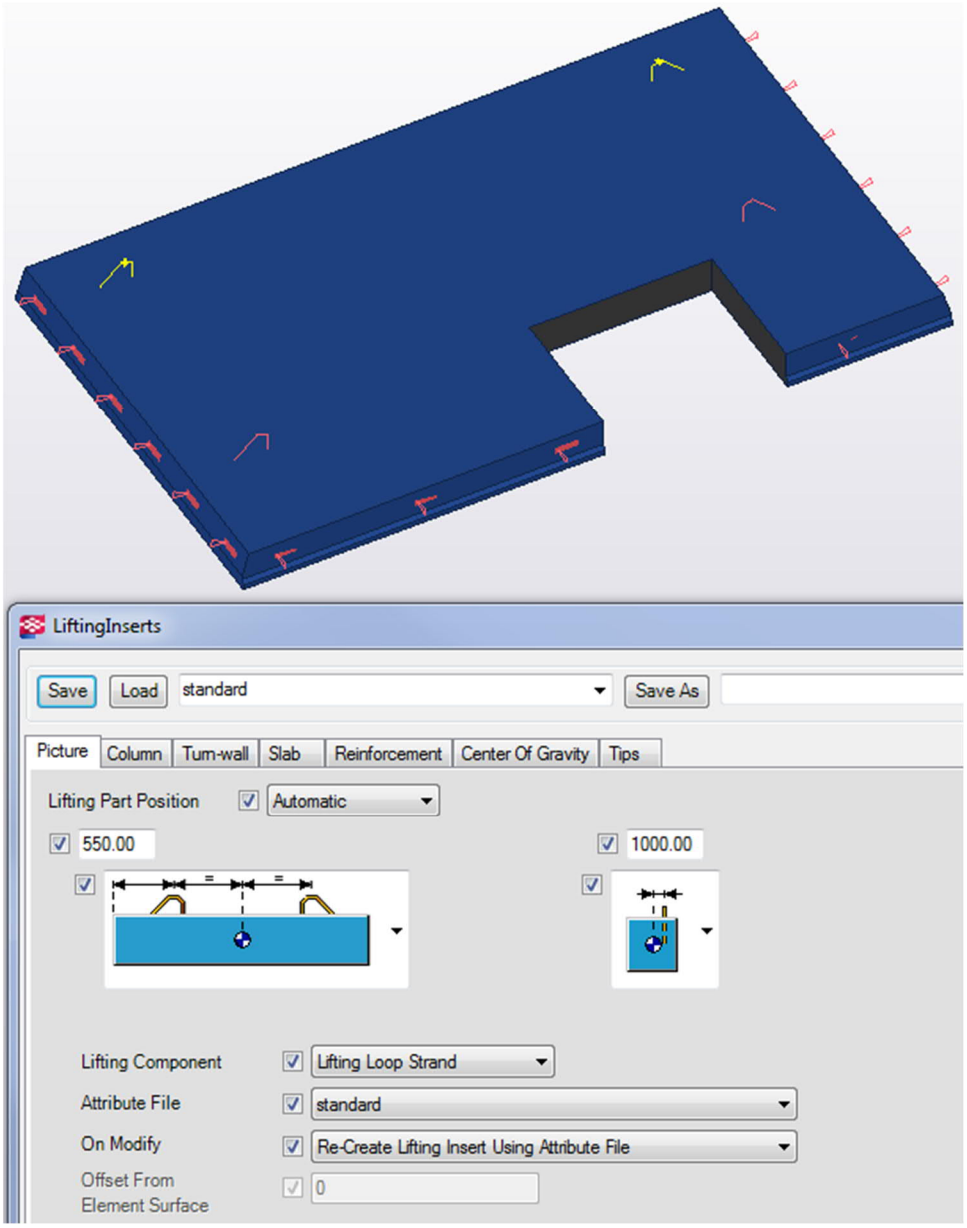

Figure 117. Lifting Inserts component: Picture tab settings (Tekla Structures model snapshot)

The relation between SL-tool and lifting insert component was studied as well, and it was found out that the creation method of LECA-blocks affects the position of the center of gravity (COG) point. Four cases were considered and compared (see the drawings in Appendix 2):

a) Slab without blocks:
   - The COG point and loops are positioned correctly but will be changed if blocks are created.

b) Slab with blocks and without cuts; negative density of the block material:
   - The COG point and loops are positioned in the same places as in the first case, but incorrectly due to the neglect of material with negative density by Tekla.
   - The weight of the element is correct.

c) Slab with blocks and without cuts; positive density of the block material:
   - The COG point and loops are positioned incorrectly: the COG point is moved to the direction of the blocks, which means that the top left corner is the heaviest even though that part is the lightest in real life.
   - The weight of the slab and blocks is combined, which is wrong.

d) Slab with blocks and cuts; positive density of the block material:
   - The COG point and loops are positioned correctly: the COG point should be moved to the bottom right corner, as it is in the example.
   - The weight of the element is correct.

4.5 Modeling method improvements and proposals

The main improvement ideas and proposals about the modeling methods and tools that have been studied above are collected and defined in the following section.

4.5.1 Improvement summary

(i) List of the desired SL-tool improvements

a) Realize the possibility to position block groups along slabs with a separate from the offset limitation value and binding type. Distinguish offsets and positioning settings in both longitudinal and transverse direction of slabs.
b) Realize the possibility to pick blocks on the 3D panel in the location of narrow zones even if their width is less than the minimal width.
c) Realize the possibility to split the component into block groups with individual attributes within one slab.
d) Fix the error when the SL-tool does not automatically leave out blocks in the location of small openings.
e) Fix the error when blocks are not updated automatically if slabs are modified with the polygon cut, line cut, or fitting.
f) Realize the automatic omission of blocks if they are collided with part cuts.
g) Fix the error when saved attributes on the direct modification panel and in the detailing tab of the property dialog box of the floor layout cannot be selected.

(ii) New custom tool

In order to ease and speed up the modeling process, a custom tool, similar to the Wall Groove Seam Detail component, may be developed.

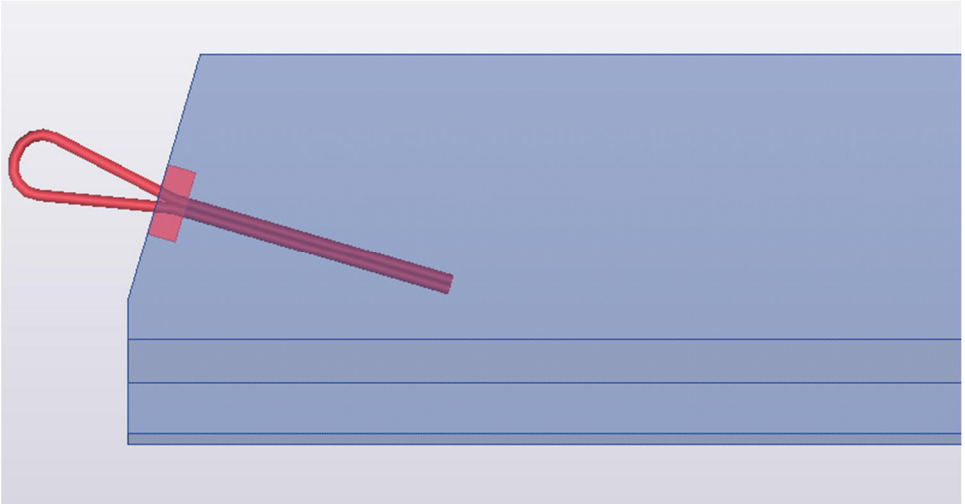

Figure 118. Representation of a custom tool developed to model skewed ends and connecting loops (Tekla Structures model snapshot)

The tool will include the following options:

- Automatic creation of adjustable skewed ends at both ends of slabs
- Automatic insertion of connecting loops into the ends of slabs (alternatively, into all four sides of slabs) with the possibility to adjust the type, spacing, position, and attributes of the loops
- Possibility to use the tool as a detailing component in the direct modification panel and detailing tab of the property dialog box of the floor layout

4.5.2 SL-tool rework

(i) Definition

The proposal is to develop a tool that works with block modeling zones, similar to the grid of slabs in the floor layout component. Such zones will be automatically created and may be modified via a direct modification panel, similar to one in the floor layout, once the tool is applied to a slab or floor layout component. The initial area of the zones will depend on the default offsets, which may be preset by a user in the properties. The offsets will be automatically indented from the edges of slabs and block leave out zones that are defined below.

(ii) Block leave out zones

The term block leave out zone refers to zones, where LECA-blocks are normally left out, such as openings, wet rooms, and intensively loaded areas. The creation methods of such zones may be divided into two categories:

a) with polygonal or rectangular shapes
b) with strips and points

The polygonal and rectangular shapes, similar to the polygonal or rectangular openings of the floor layout, may be used with almost all previously mentioned types of leave out zones, while the strips and points would be more efficient to represent the trajectory, width, or profile of loaded areas. For example, a point with a 200 mm diameter may represent a carrying or supporting column, a strip with 300 mm width may represent a carrying or supporting wall with 300 mm width, and so on. The shapes, strips, and points may be modified by using the direct modification panel, similar to the panel of the floor layout.

(iii) Offsets

The offsets are basically adjustable boundaries limiting the permitted area, where LECA-blocks may be created. They are very similar to the offsets of the floor layout, and may be modified by dragging boundaries, typing desired offset values, and switching between leave out zone types while the direct modification mode is on. For each type of the offsets, there is a corresponding type of leave out zones:

a) Starting edge of slabs (normally 250 mm)
b) Ending edge of slabs (normally 250 mm)
c) Left edge of slabs (normally 68 mm)
d) Right edge of slabs (normally 68 mm)
e) Openings and cut edges
f) Wet room areas
g) Loads coming from supports
h) Loads coming from upper structures
i) Custom areas (built-in parts or part cuts)
j) Break lines

(iv) Break lines, attributes, and attribute strips

Once the block modeling zones are finally set, they may be split with break lines, similar to the break line of the floor layout, into smaller zones with different attributes. Thus, block groups with different block shapes, spacings, positioning, materials, and other settings may be modeled within one slab. Later, an attribute strip, similar to the detailing component strips of the floor layout, may be used in order to set the same attributes to all block modeling zones that it overlaps.

(v) Modification levels and block representation settings

In order to distinguish various modeling levels, such as individual zones, zones within one slab, attribute strips, and global, the direct modification panel should be provided with buttons allowing for switching between these levels. Also, the tool may have an option to choose between different block representation settings:

a) Block modeling zones in the form of polygons and rectangles
b) Blocks without cuts
c) Blocks with cuts

(vi) Summary

Generally, the property dialog box options of the new tool will be the same as the options provided in the SL-tool at the moment. The 3D panel still may be needed to leave out individual blocks, even though it is possible to do with block leave out zones. However, some new options, such as offset types, positioning of blocks, and “block modeling zones” representation, will be added. The greatest difference is the possibility to modify several or single slabs using the direct modification panel and its tools:

a) Block leave out polygonal, rectangular shapes, strips, and points with the possibility to drag boundaries, type offset values, switch between leave out zone types, and modify the strip width and point profile
b) Break lines
c) Attribute strips
d) Modification level switch

5 CONCLUSION

To sum up, the main goal of the thesis consisting in the testing and analysis of Luja-Superlaatta modeling capabilities in Tekla Structures environment is entirely achieved. Also, some modeling regulations and recommendations are presented, and the improvement report based on the modeling flaws and errors obtained during the tests is provided.

Furthermore, this thesis may serve as a good knowledge base for people interested in Luja-Superlaatta. Such aspects as the brief theory about reinforced concrete structures, comparison of several slab systems, definition of Tekla Structures and its tools, specification of the product, typical details, design method, description of the interaction with the manufacturer, and other corresponding information will help to distinguish, classify, and comprehensively study the product and its design features. In addition to the information mentioned above, several useful documents related to the slab and examples of required structural drawings based on the case building model are attached to the thesis in the appendices.

In prospect, the work performed on the provided detailing tools may be used for further improvements of both the Luja-Superlaatta modeling process and Tekla Structures modeling versatility and deeper adaptation of the program to the detailing of concrete slabs.

REFERENCES

Abeo A/S. (2014). SL-Deck - Technical data sheet.

Abeo A/S. (n.d.). The SL-Deck. Retrieved 12 15, 2018, from Abeo: https://www.abeo.dk/en/the-sl-deck

Accu-cut concrete cutting and breaking. (n.d.). BLOG. Retrieved October 03, 2018, from http://accucutconcretecuttingla.com/category/blog/

AltusGroup, inc. (n.d.). CarbonCast Double Tees. Retrieved October 03, 2018, from https://altusprecast.com/carboncast-double-tees/

BCSA. (n.d.). Composite construction. Retrieved October 04, 2018, from SteelConstruction.info: https://www.steelconstruction.info/Composite_construction

Betoniteollisuus Ry. (2012, May 21). Ontelolaatat. Retrieved October 04, 2018, from Elementtisuunnittelu.fi: https://parma.fi/tuote/ontelolaatat-ja-kuorilaatat/

Bhatt, P., MacGinley, T. J., & Choo, B. (2014). Reinforced Concrete Design to Eurocodes: Design theory and Examples, 4th Edition. Florida, USA: Taylor & Francis Group.

BubbleDeck International A/S. (n.d.). BubbleDeck. Retrieved October 04, 2018, from http://www.bubbledeck.com/

Buettner, D., & Becker, R. (1998). PCI manual for the design of hollow core slabs, Second Edition. Precast / prestressed concrete institute.

Calavera, J. (2012). Manual for Detailing Reinforced Concrete Structures to EC2. New York: Spon Press.

Chudley, R., & Greeno, R. (2014). Building Construction Handbook, 10th Edition. New York: Routledge.

Dimitrijevic, R., Gavrilovic, B., & Stolic, A. (2000). Commercial and technical publications. Retrieved October 04, 2018, from IMS Institute: https://www.institutims.rs/publikacije/publications.html

Edgerton, C. (2015, February 15). How is concrete poured for very high floors of skyscrapers? (Quora) Retrieved October 03, 2018, from https://www.quora.com/How-is-concrete-poured-for-very-high-floors-of-skyscrapers

Fira Group Oy. (n.d.). Hansakallio 3. Retrieved 03 14, 2019, from Fira: https://www.fira.fi/referenssit/hansakallio-3/

First In Architecture. (n.d.). Introduction to Beam and Block Floors. Retrieved October 03, 2018, from https://www.firstinarchitecture.co.uk/introduction-to-beam-and-block-floors/

Forterra Building Products Ltd. (2017, November). Hollowcore floors. Retrieved October 03, 2018, from https://www.forterra.co.uk/bison-precast-concrete/hollowcore-floors

Helimäki Akustikot Oy. (2018). Lausunto SL-välipohjaelementin ääneneristävyydestä.

Howling Pixel. (n.d.). Concrete. Retrieved October 03, 2018, from https://howlingpixel.com/i-en/Concrete

Ilveskoski, O. (2014). Building construction. Hämeenlinna: HAMK University of Applied Sciences.

International Federation for Structural Concrete. (2008). Structural connections for precast concrete buildings. Lausanne: Sprint-Digital-Druck.

Keegan Precast Ltd. (n.d.). Omnia Floor Slab. Retrieved October 03, 2018, from http://www.keeganprecast.com/products/precast-floors-stairs/omnia-floor-slab

Lujabetoni Oy. (2018). Luja-Superlaatta - Suunnitteluohje. Retrieved from Lujabetoni.fi.

Lujabetoni Oy. (n.d.). Lujabetoni. Retrieved 12 15, 2018, from Luja-Superlaatta.

Lujabetoni Oy. (n.d.). Luja-Superlaatta - Tehokkuusloikka välipohjarakentamiseen. Retrieved 12 15, 2018, from Youtube: https://www.youtube.com/watch?v=VxCTRmsm38M

National Ready Mixed Concrete Association. (n.d.). CIPs. Retrieved from NRMCA National Ready Mixed Concrete Association: https://www.nrmca.org/aboutconcrete/cips/default.asp

Nordimpianti System Srl. (n.d.). Half Slabs. (Nordimpianti System Srl) Retrieved October 04, 2018, from Nordimpianti Concrete Systems: https://www.nordimpianti.com/Concrete-Elements/Half-Slabs

Peikko Group. (2017, November). DELTABEAM Frame. Retrieved October 03, 2018, from Peikko: https://www.peikko.com/products/deltabeam-slim-floor-structures/deltabeam-frame/

Rubenstein, M. (2012, January 09). Emissions from the Cement Industry. Retrieved October 03, 2018, from State of the planet: https://blogs.ei.columbia.edu/2012/05/09/emissions-from-the-cement-industry/

Ry, Betoniteollisuus. (n.d.). TT- laatat. Retrieved October 04, 2018, from Elementtisuunnittelu.fi: http://www.elementtisuunnittelu.fi/fi/runkorakenteet/laatat/tt-laatat

Tecnostrutture s.r.l. (n.d.). Airfloor slab. Retrieved 02 22, 2019, from Tecnostrutture Steel-concrete Composite Structures: https://www.tecnostrutture.eu/eng/catalog/all-nps-products/horizontal-structures/solaio-airfloor.html

Tekla User Assistance. (n.d.). Beam, column, and slab reinforcement. (Trimble Solutions Corporation) Retrieved October 22, 2018, from Tekla User Assistance for Tekla Structures: https://teklastructures.support.tekla.com/2018i/en/det_reinforcement_beams_columns_slabs

Tekla User Assistance. (n.d.). Floor layout. (Trimble Solutions Corporation) Retrieved October 22, 2018, from Tekla User Assistance for Tekla Structures: https://teklastructures.support.tekla.com/2018i/en/modtool_help_floor_layout

The Aberdeen Group. (1988). Tips for roofing concrete roof decks. Retrieved October 7, 2018, from Concrete Construction: https://www.concreteconstruction.net/how-to/construction/tips-on-roofing-concrete-roof-decks_o

The Concrete Centre. (2017). CALcrete 4.5. Retrieved from https://www.concretecentre.com/Publications-Software/Design-tools-and-software/CALcrete.aspx

The Concrete Centre. (n.d.). Floor screeds. Retrieved from MPA The Concrete Centre: https://www.concretecentre.com/Building-Elements/Floors/Floor-Screeds.aspx

The Concrete Centre. (n.d.). Self-compacting concrete (SCC). Retrieved 12 15, 2018, from MPA The Concrete Centre:

https://www.concretecentre.com/Performance-Sustainability-(1)/Special-Concrete/self-compacting-concrete-(SCC).aspx

The Finnish Roofing Association. (n.d.). Functional Roofs, English version. Retrieved October 7, 2018, from kattoliitto.fi: http://www.kattoliitto.fi/index.phtml?s=184

Trimble Solutions Corporation. (2018). Tekla Structures 2018i: Modeling.

Vieser Oy. (n.d.). Vieser One Vaakakaivo DN 75 3×32/40. Retrieved 12 15, 2018, from Vieser: https://www.vieser.fi/tuote/vieser-one-vaakakaivo-dn-74-3x3240valutuilla/

Wetrooms UK Ltd. (n.d.). Wet Room Construction Details. Retrieved October 4, 2018, from CCL Wetrooms: https://www.ccl-wetrooms.co.uk/technical/wet-room-technical-help-desk/wet-room-construction-details/

White, J., & MacGreogor, J. (2009). Reinforced concrete: Mechanics and Design, Fifth edition. Upper Saddle River.

SETTING EXAMPLES

Floor layout:

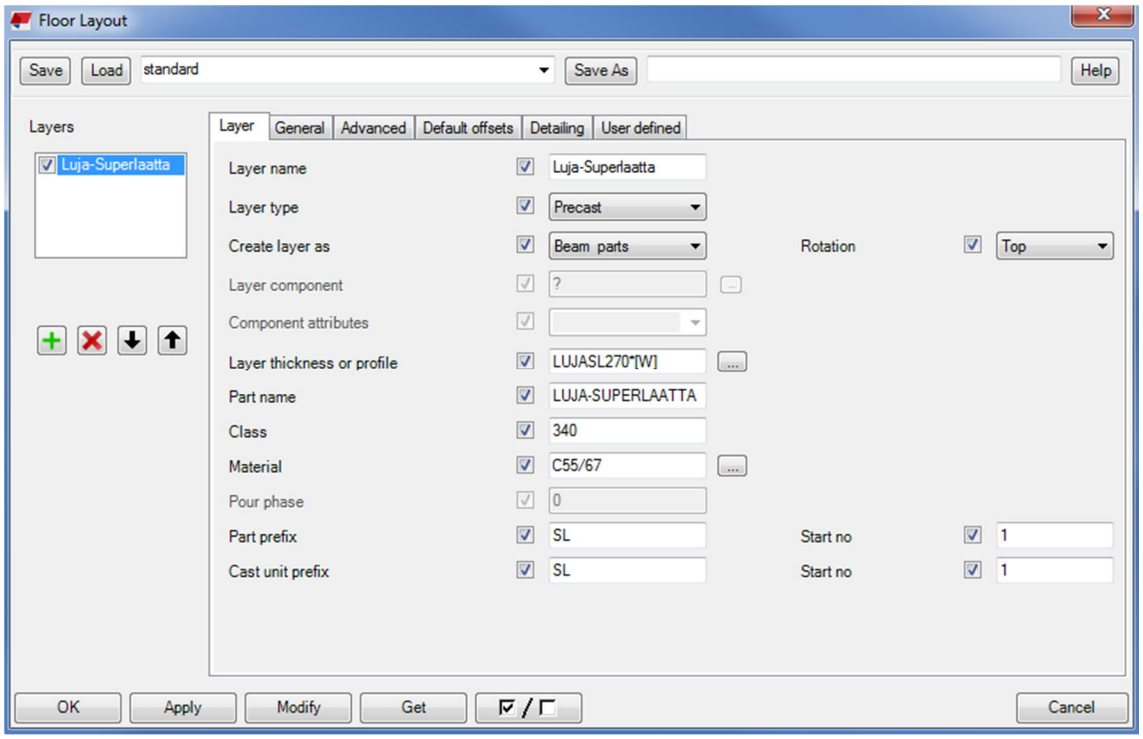

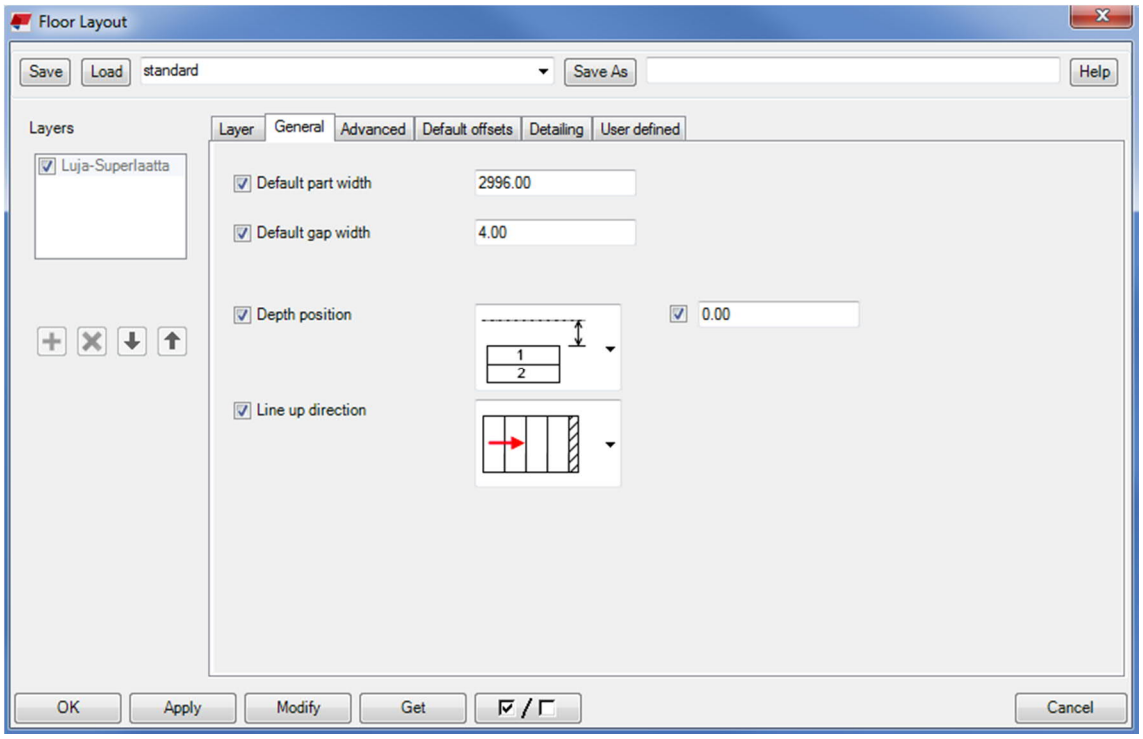

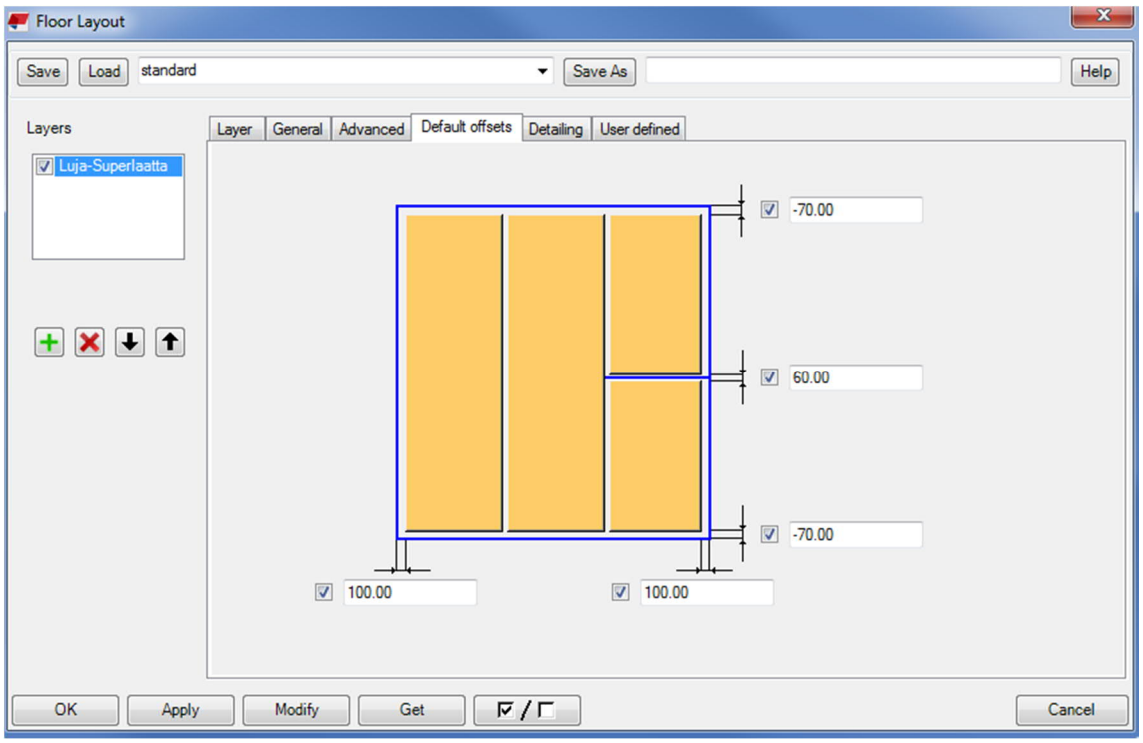
Floor Layout
Save
Load
standard
Save As
Help
Layers
Luja-Superlaatta
Layer
General
Advanced
Default offsets
Detailing
User defined
-70.00
60.00
-70.00
100.00
100.00
OK
Apply
Modify
Get
Cancel

SL-tool:

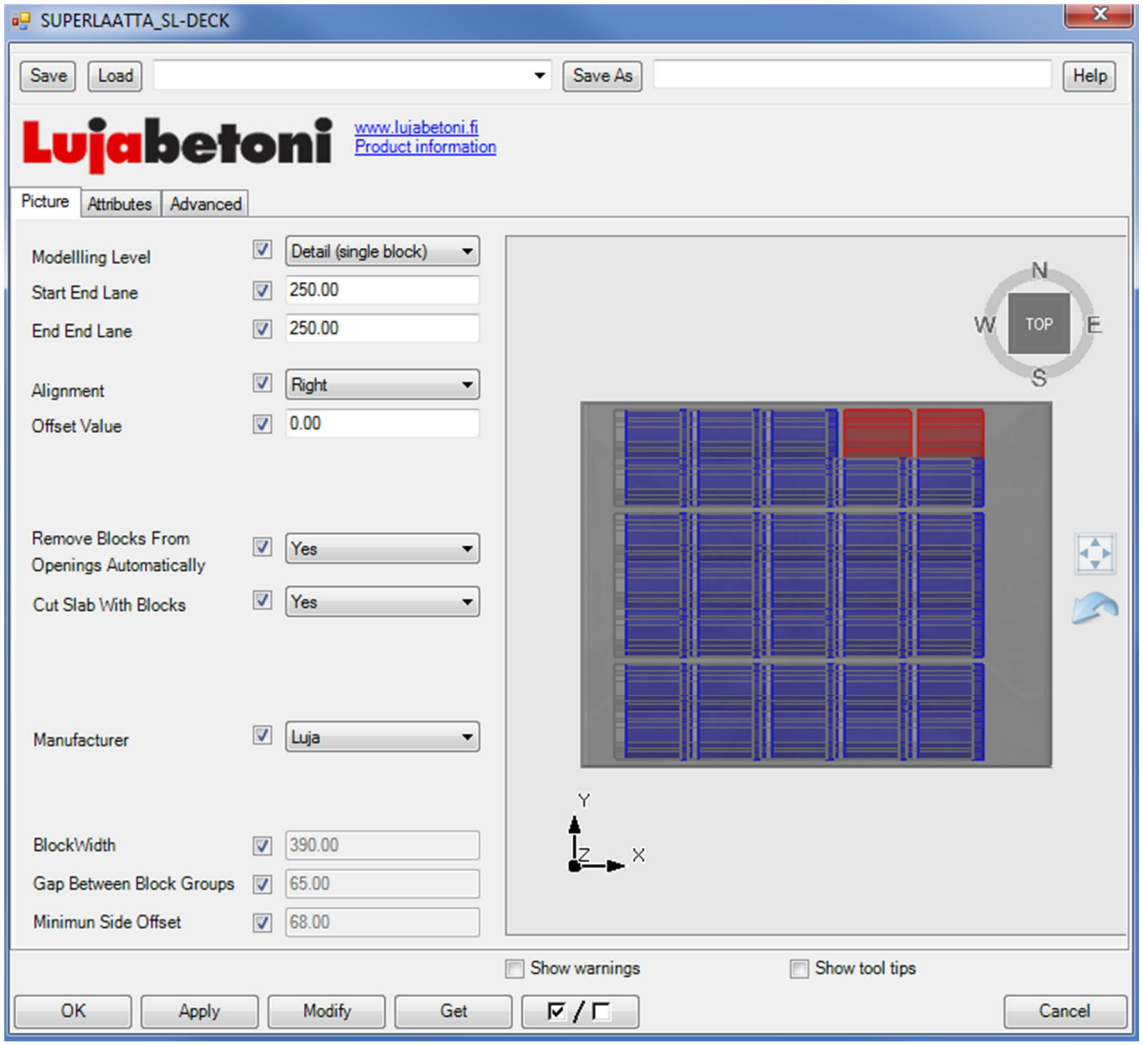
SUPERLAATTA_SL-DECK
Save
Load
Save As
Help
Lujabetoni
www.lujabetoni.fi
Product information
Picture
Attributes
Advanced
Modellling Level
Detail (single block)
Start End Lane
250.00
End End Lane
250.00
Alignment
Right
Offset Value
0.00
Remove Blocks From Openings Automatically
Yes
Cut Slab With Blocks
Yes
Manufacturer
Luja
BlockWidth
390.00
Gap Between Block Groups
65.00
Minimun Side Offset
68.00
N
W
TOP
E
S
Y
Z
X
Show warnings
Show tool tips
OK
Apply
Modify
Get
Cancel

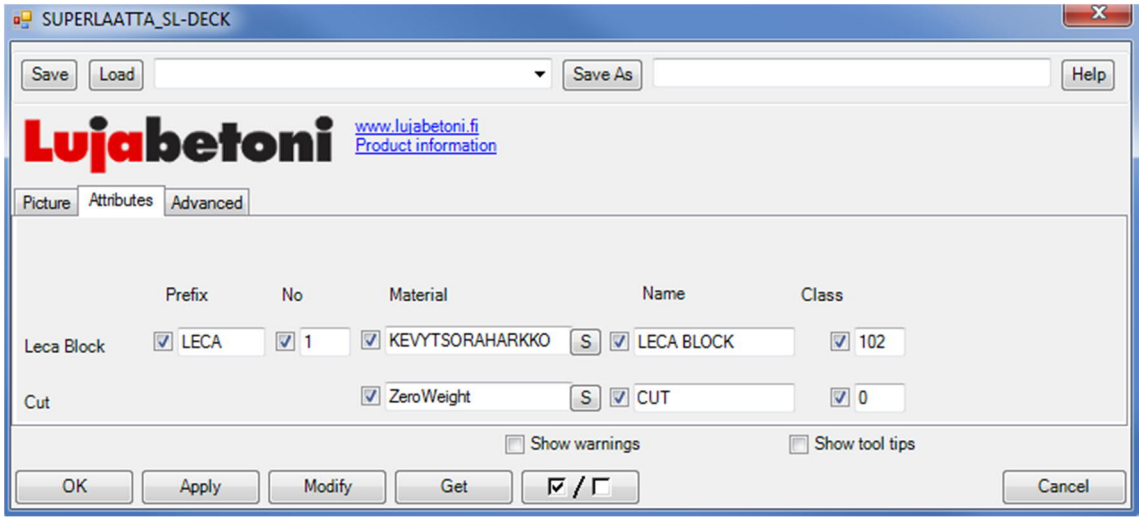
SUPERLAATTA_SL-DECK
Save
Load
Save As
Help
Lujabetoni
www.lujabetoni.fi
Product information
Picture
Attributes
Advanced
Prefix
No
Material
Name
Class
Leca Block
LECA
1
KEVYTSORAHARKKO
S
LECA BLOCK
102
Cut
ZeroWeight
S
CUT
0
Show warnings
Show tool tips
OK
Apply
Modify
Get
Cancel

Appendix 2

PDF-ATTACHEMENTS:

- Reinforcement and LECA-block arrangement
    - SL-270 (one page)
    - SL-220 (one page)
- Bearing capacity and deflection curves and tables
    - Capacity curves of SL-270 (one page)
    - Deflection curves of SL-270 (one page)
    - Capacity curves of SL-220 (four pages)
- Drawing examples
    - Plan drawing of the second floor of the case building (one page)
    - Element drawings (four pages)
- Modeling cases of the test on the relation between the SL-tool and Lifting Inserts component (four pages)

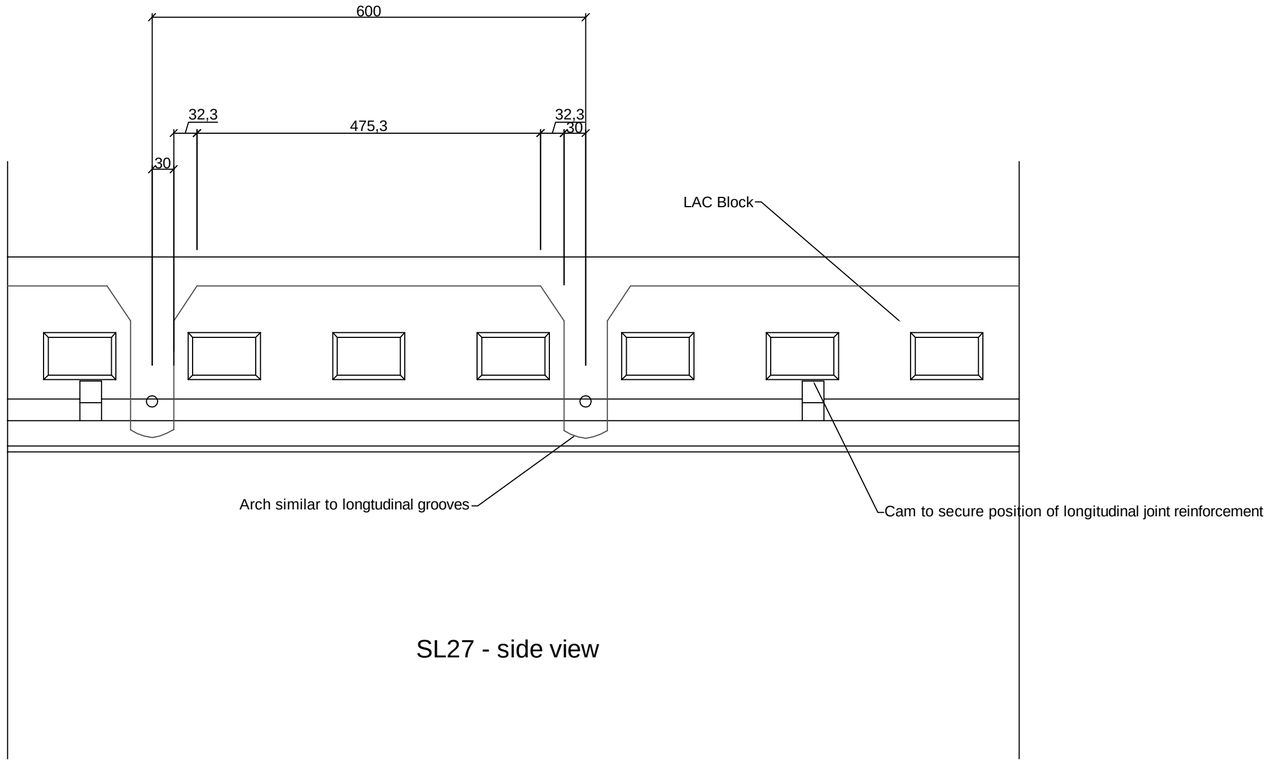

SL27 - side view

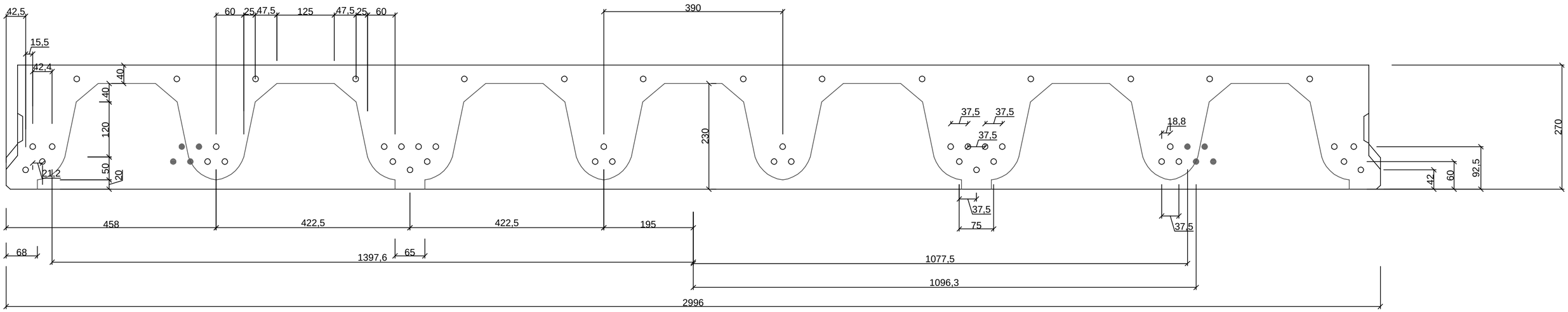

SL27 - Cross section - 3.0 m width - standard concrete cover (30 mm to center)

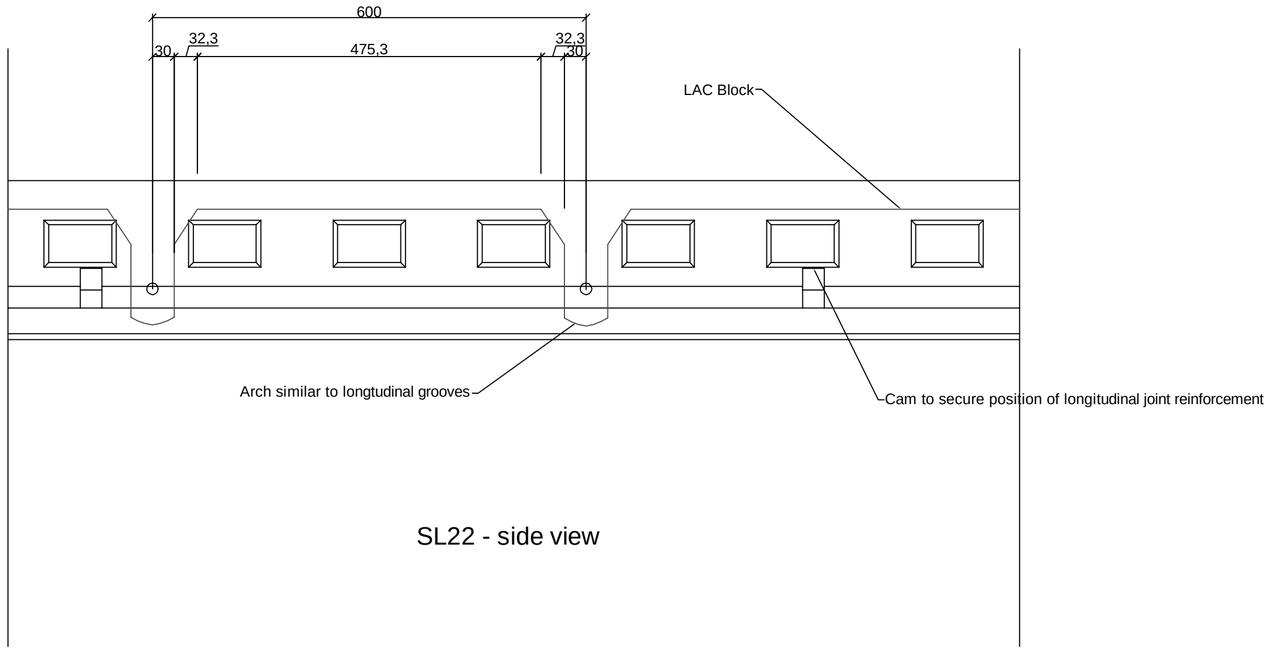

SL22 - side view

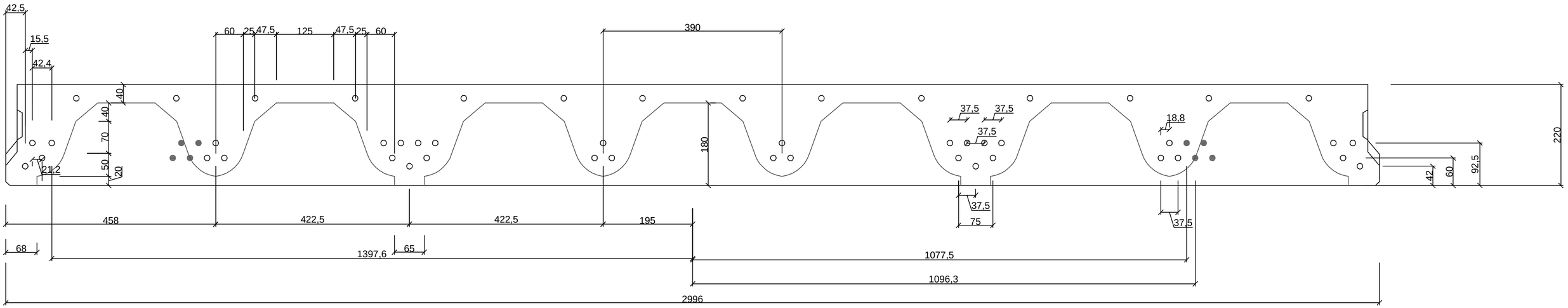

SL22 - Cross section - 3.0 m width - standard concrete cover (30 mm to center)

Capacity curves of SL-27

According to EN1992-1-1

Lujabetoni

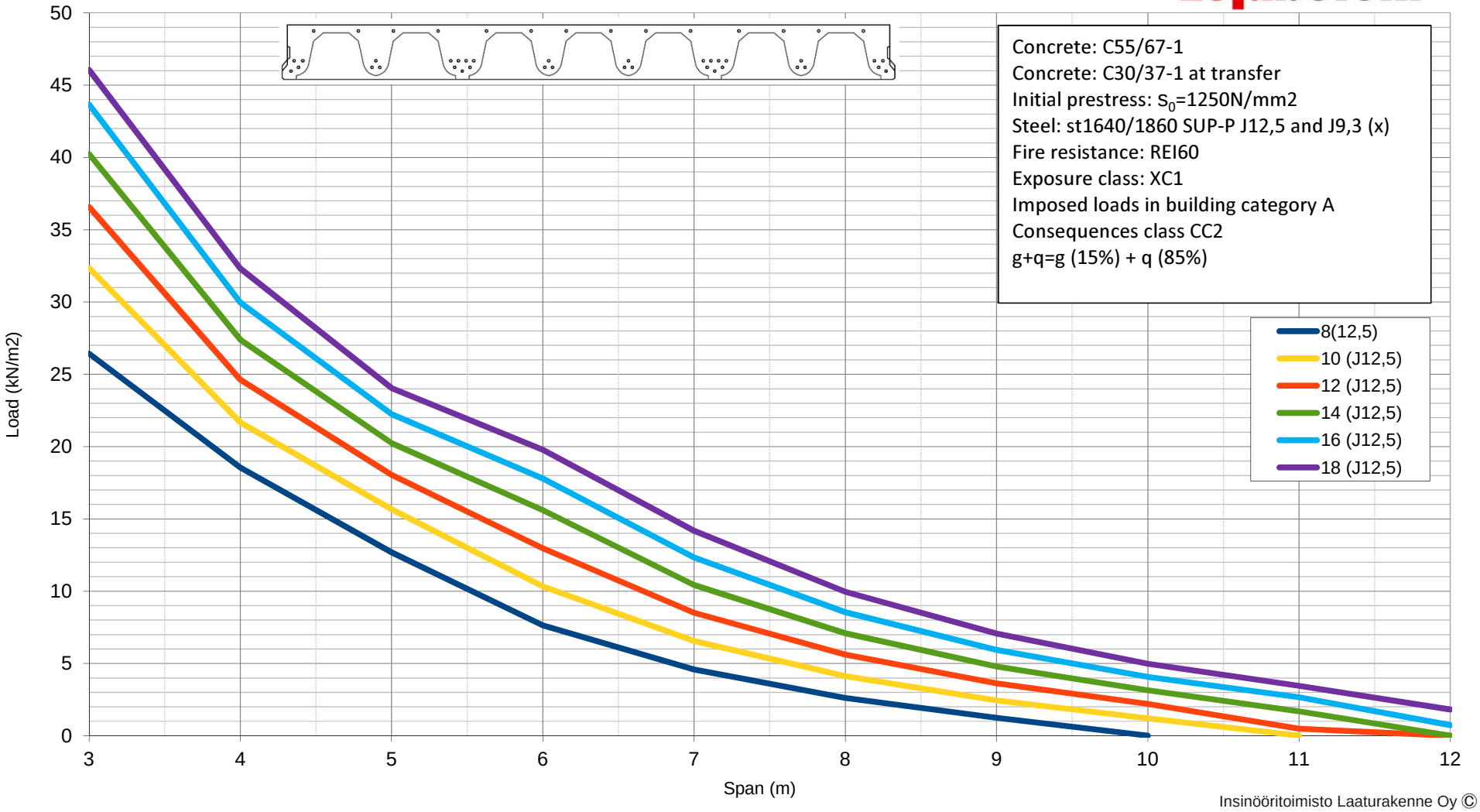

Insinööritoimisto Laaturakenne Oy ©

Deflection curves of SL27

According to EN1992-1-1

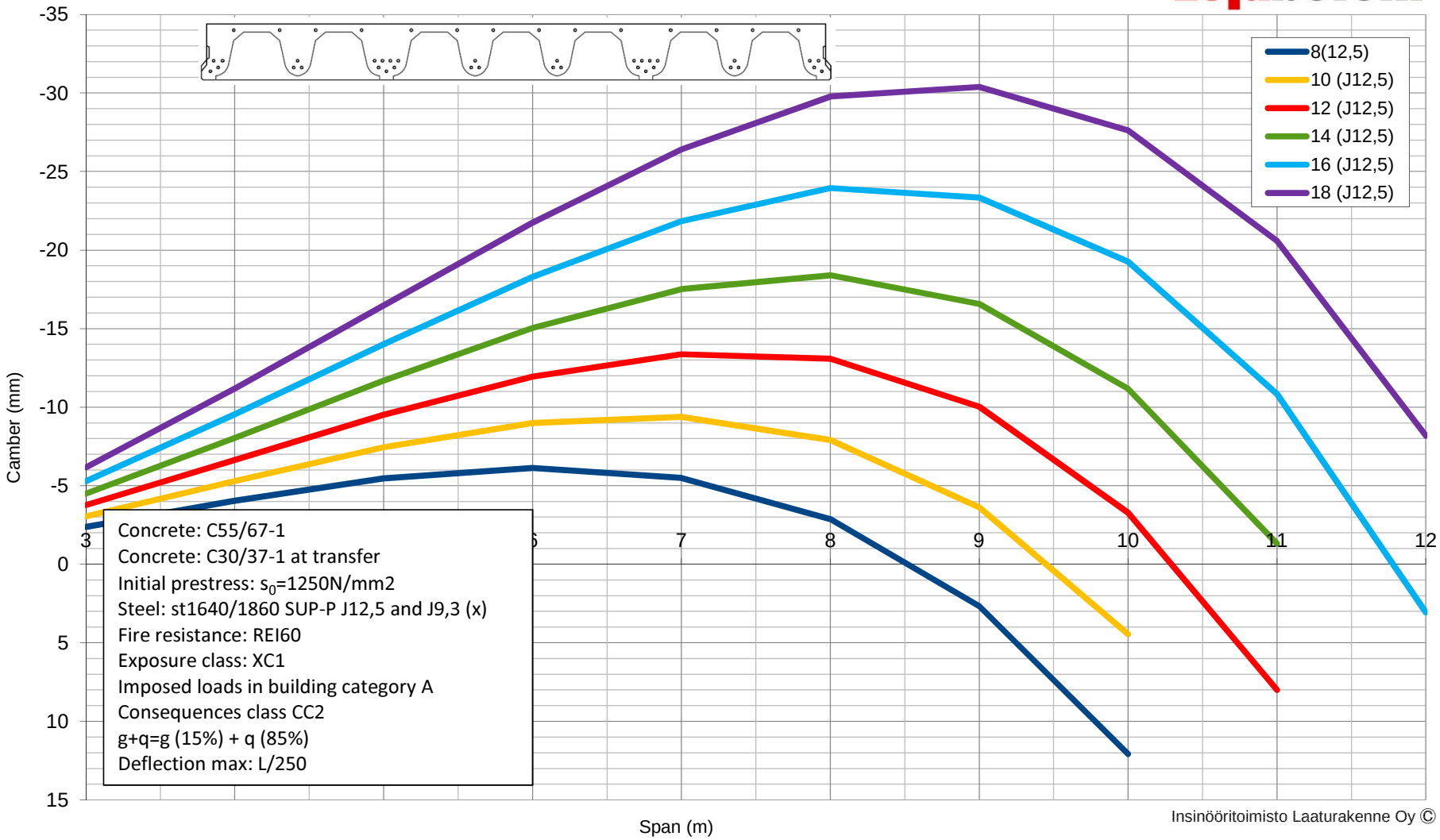

Insinööritoimisto Laaturakenne Oy ©

Load-carrying capacity table - SL22

abeo®

Self-weight for standard SL22 excluding joints is app. 378 kg/m^2

Reinforcement			Span (m)	6,0	6,6	7,2	7,8	8,4	9,0	9,6	10,2	10,8	11,4	12,0	12,6	13,2	13,8	14,4
12 x ½" (12,5mm)	Simple supported	M_{Rd} = 247 kNm	q_{vRd} (kN/m^2)	18,9	14,8	11,7	9,3	7,4	5,9	4,6	3,6	2,7	-	-	-	-	-	-
	Fixed in 1 end			22,8	18,1	14,5	11,7	9,4	7,6	6,2	4,9	3,9	-	-	-	-	-	-
	Fixed in 2 ends			26,8	21,1	17,2	14,0	11,4	9,4	7,7	6,3	5,1	-	-	-	-	-	-
	Simple supported	M_{rev} = 142 kNm	q_{vrev} (kN/m^2)	8,9	6,6	4,8	3,5	2,4	1,5	0,7	0,1	-0,4	-	-	-	-	-	-
	Fixed in 1 end			11,2	8,5	6,4	4,8	3,5	2,5	1,6	0,9	0,3	-	-	-	-	-	-
	Fixed in 2 ends			13,5	10,4	8,0	6,1	4,7	3,5	2,5	1,7	1,0	-	-	-	-	-	-
		Balance load	q_{vbal} (kN/m^2)	5,5	3,7	2,4	1,4	0,6	-0,1	-0,6	-1,1	-1,4	-	-	-	-	-	-
		V_{Rd} = 129 kN	q_{vvRd} (kN/m^2)	13,8	12,1	10,7	9,5	8,5	7,7	6,9	6,2	5,6	-	-	-	-	-	-
	Simple supported	M_{REI120} = 170 kNm	$q_{vmREI120}$ (kN/m^2)	11,6	8,8	6,7	5,0	3,7	2,6	1,8	1,1	0,5	-	-	-	-	-	-
	Fixed in 1 end			16,4	12,8	10,0	7,9	6,2	4,8	3,7	2,7	1,9	-	-	-	-	-	-
	Fixed in 2 ends			21,2	16,7	13,3	10,7	8,6	6,9	5,5	4,4	3,4	-	-	-	-	-	-
	Simple supported	Eigenfrequencies	f_{v1} (Hz)	10	9	8	7	6	6	5	5	4	-	-	-	-	-	-
	Fixed in 1 end			15	14	12	11	10	9	8	7	7	-	-	-	-	-	-
	Fixed in 2 ends			21	19	17	15	14	12	11	10	9	-	-	-	-	-	-
		Camber	f_{iev} (mm)	13	14	14	13	11	7	2	-6	-15	-	-	-	-	-	-

Reinforcement			Span (m)	6,0	6,6	7,2	7,8	8,4	9,0	9,6	10,2	10,8	11,4	12,0	12,6	13,2	13,8	14,4
14 x ½" (12,5mm)	Simple supported	M_{Rd} = 285 kNm	q_{vRd} (kN/m^2)	22,4	17,8	14,2	11,4	9,2	7,5	6,0	4,8	3,8	2,9	-	-	-	-	-
	Fixed in 1 end			26,4	21,0	16,9	13,8	11,2	9,2	7,5	6,2	5,0	4,0	-	-	-	-	-
	Fixed in 2 ends			30,3	24,3	19,7	16,1	13,3	11,0	9,1	7,5	6,2	5,1	-	-	-	-	-
	Simple supported	M_{rev} = 160 kNm	q_{vrev} (kN/m^2)	10,6	8,0	6,0	4,4	3,2	2,2	1,4	0,7	0,2	-0,3	-	-	-	-	-
	Fixed in 1 end			12,9	9,8	7,5	5,8	4,3	3,2	2,3	1,5	0,8	0,3	-	-	-	-	-
	Fixed in 2 ends			15,1	11,7	9,1	7,1	5,5	4,2	3,1	2,3	1,5	0,9	-	-	-	-	-
		Balance load	q_{vbal} (kN/m^2)	7,0	5,0	3,5	2,3	1,3	0,6	0,0	-0,5	-1,0	-1,3	-	-	-	-	-
		V_{Rd} = 132 kN	q_{vvRd} (kN/m^2)	14,2	12,5	11,1	9,9	8,9	8,0	7,2	6,5	5,9	5,4	-	-	-	-	-
	Simple supported	M_{REI120} = 200 kNm	$q_{vmREI120}$ (kN/m^2)	14,4	11,1	8,6	6,7	5,1	3,9	2,9	2,0	1,3	0,7	-	-	-	-	-
	Fixed in 1 end			19,3	15,1	12,0	9,6	7,6	6,0	4,8	3,7	2,8	2,1	-	-	-	-	-
	Fixed in 2 ends			21,1	19,2	15,4	12,4	10,1	8,2	6,7	5,4	4,3	3,4	-	-	-	-	-
	Simple supported	Eigenfrequencies	f_{v1} (Hz)	10	9	8	7	6	6	5	5	4	4	-	-	-	-	-
	Fixed in 1 end			15	13	12	11	9	9	8	7	7	6	-	-	-	-	-
	Fixed in 2 ends			21	18	16	15	13	12	11	10	9	8	-	-	-	-	-
		Camber	f_{iev} (mm)	16	18	18	18	17	14	10	4	-5	-16	-	-	-	-	-

Reinforcement			Span (m)	6,0	6,6	7,2	7,8	8,4	9,0	9,6	10,2	10,8	11,4	12,0	12,6	13,2	13,8	14,4
15 x ½" (12,5mm)	Simple supported	M_{Rd} = 304 kNm	q_{vRd} (kN/m^2)	24,2	19,2	15,4	12,5	10,1	8,2	6,7	5,4	4,3	3,4	2,7	-	-	-	-
	Fixed in 1 end			28,1	22,5	18,2	14,8	12,1	10,0	8,2	6,8	5,6	4,5	3,6	-	-	-	-
	Fixed in 2 ends			32,1	25,7	20,9	17,1	14,2	11,7	9,8	8,1	6,8	5,6	4,6	-	-	-	-
	Simple supported	M_{rev} = 169 kNm	q_{vrev} (kN/m^2)	11,5	8,7	6,6	4,9	3,6	2,6	1,7	1,0	0,4	-0,1	-0,5	-	-	-	-
	Fixed in 1 end			13,7	10,5	8,1	6,2	4,8	3,6	2,6	1,8	1,1	0,5	0,0	-	-	-	-
	Fixed in 2 ends			15,9	12,3	9,6	7,5	5,9	4,5	3,4	2,5	1,8	1,1	0,6	-	-	-	-
		Balance load	q_{vbal} (kN/m^2)	7,7	5,6	4,0	2,7	1,7	0,9	0,3	-0,3	-0,8	-1,1	-1,5	-	-	-	-
		V_{Rd} = 134 kN	q_{vvRd} (kN/m^2)	14,5	12,7	11,3	10,1	9,0	8,1	7,3	6,7	6,0	5,5	5,0	-	-	-	-
	Simple supported	M_{REI120} = 213 kNm	$q_{vmREI120}$ (kN/m^2)	15,6	12,1	9,5	7,4	5,8	4,4	3,3	2,4	1,7	1,1	0,5	-	-	-	-
	Fixed in 1 end			20,5	16,2	12,9	10,3	8,3	6,6	5,3	4,1	3,2	2,4	1,7	-	-	-	-
	Fixed in 2 ends			25,4	20,2	16,3	13,2	10,7	8,8	7,2	5,8	4,7	3,8	3,0	-	-	-	-
	Simple supported	Eigenfrequencies	$f_{,1}$ (Hz)	10	9	8	7	6	6	5	5	4	4	4	-	-	-	-
	Fixed in 1 end			15	13	12	10	9	8	8	7	6	6	5	-	-	-	-
	Fixed in 2 ends			20	18	16	15	13	12	11	10	9	8	8	-	-	-	-
		Camber	f_{lev} (mm)	18	19	21	21	20	18	14	8	0	-10	-24	-	-	-	-

Reinforcement			Span (m)	6,0	6,6	7,2	7,8	8,4	9,0	9,6	10,2	10,8	11,4	12,0	12,6	13,2	13,8	14,4
17 x ½" (12,5mm)	Simple supported	M_{Rd} = 332 kNm	q_{vRd} (kN/m^2)	-	21,4	17,2	14,0	11,5	9,4	7,7	6,3	5,1	4,2	3,3	2,6	-	-	-
	Fixed in 1 end			-	24,7	20,0	16,4	13,5	11,2	9,3	7,7	6,4	5,3	4,3	3,5	-	-	-
	Fixed in 2 ends			-	28,1	22,8	18,8	15,6	13,0	10,9	9,1	7,6	6,4	5,3	4,4	-	-	-
	Simple supported	M_{rev} = 181 kNm	q_{vrev} (kN/m^2)	-	9,6	7,3	5,6	4,2	3,1	2,1	1,4	0,7	0,2	-0,3	-0,7	-	-	-
	Fixed in 1 end			-	11,4	8,9	6,9	5,3	4,0	3,0	2,1	1,4	0,8	0,3	-0,2	-	-	-
	Fixed in 2 ends			-	13,2	10,4	8,2	6,4	5,0	3,9	2,9	2,1	1,4	0,8	0,3	-	-	-
		Balance load	q_{vbal} (kN/m^2)	-	6,3	4,6	3,2	2,1	1,3	0,6	0,0	-0,5	-0,9	-1,3	-1,6	-	-	-
		V_{Rd} = 137 kN	q_{vvRd} (kN/m^2)	-	13,2	11,7	10,5	9,4	8,5	7,6	6,9	6,3	5,7	5,2	4,7	-	-	-
	Simple supported	M_{REI120} = 244 kNm	$q_{vmREI120}$ (kN/m^2)	-	14,5	11,5	9,1	7,2	5,7	4,5	3,4	2,6	1,8	1,2	0,7	-	-	-
	Fixed in 1 end			-	18,7	15,0	12,1	9,8	7,9	6,4	5,2	4,1	3,2	2,5	1,8	-	-	-
	Fixed in 2 ends			-	22,8	18,5	15,1	12,4	10,2	8,4	6,9	5,7	4,6	3,7	3,0	-	-	-
	Simple supported	Eigenfrequencies	$f_{,1}$ (Hz)	-	9	8	7	6	6	5	5	4	4	4	3	-	-	-
	Fixed in 1 end			-	13	11	10	9	8	8	7	6	6	5	5	-	-	-
	Fixed in 2 ends			-	18	16	14	13	12	11	10	9	8	8	7	-	-	-
		Camber	f_{lev} (mm)	-	22	23	24	23	22	18	13	6	-4	-17	-33	-	-	-

Reinforcement			Span (m)	6,0	6,6	7,2	7,8	8,4	9,0	9,6	10,2	10,8	11,4	12,0	12,6	13,2	13,8	14,4
19 x ½" (12,5mm)	Simple supported	M_{Rd} = 359 kNm	q_{vRd} (kN/m^2)	-	-	19,0	15,5	12,8	10,5	8,7	7,2	5,9	4,9	3,9	3,2	2,5	-	-
	Fixed in 1 end			-	-	21,9	18,0	14,9	12,4	10,3	8,6	7,2	6,0	5,0	4,1	3,3	-	-
	Fixed in 2 ends			-	-	24,7	20,4	17,0	14,2	11,9	10,1	8,5	7,1	6,0	5,0	4,2	-	-
	Simple supported	M_{rev} = 193 kNm	q_{vrev} (kN/m^2)	-	-	8,1	6,2	4,7	3,5	2,6	1,8	1,1	0,5	0,0	-0,4	-0,8	-	-
	Fixed in 1 end			-	-	9,6	7,5	5,9	4,5	3,4	2,5	1,8	1,1	0,6	0,1	-0,3	-	-
	Fixed in 2 ends			-	-	11,2	8,8	7,0	5,5	4,3	3,3	2,4	1,7	1,1	0,6	0,1	-	-
		Balance load	q_{vbal} (kN/m^2)	-	-	5,1	3,7	2,6	1,6	0,9	0,3	-0,2	-0,7	-1,1	-1,4	-1,7	-	-
		V_{Rd} = 141 kN	q_{vvRd} (kN/m^2)	-	-	12,1	10,8	9,7	8,8	7,9	7,2	6,5	6,0	5,4	5,0	4,5	-	-
	Simple supported	M_{REI120} = 274 kNm	$q_{vmREI120}$ (kN/m^2)	-	-	13,4	10,8	8,7	7,0	5,6	4,4	3,4	2,6	1,9	1,3	0,8	-	-
	Fixed in 1 end			-	-	17,0	13,8	11,3	9,3	7,6	6,2	5,0	4,1	3,2	2,5	1,9	-	-
	Fixed in 2 ends			-	-	20,6	16,9	13,9	11,6	9,6	8,0	6,6	5,5	4,5	3,7	2,9	-	-
	Simple supported	Eigenfrequencies	$f_{,1}$ (Hz)	-	-	7	7	6	5	5	5	4	4	4	3	3	-	-
	Fixed in 1 end			-	-	11	10	9	8	7	7	6	6	5	5	5	-	-
	Fixed in 2 ends			-	-	16	14	13	12	11	10	9	8	8	7	7	-	-
		Camber	f_{lev} (mm)	-	-	26	27	27	25	23	18	11	2	-10	-26	-45	-	-

Reinforcement			Span (m)	6,0	6,6	7,2	7,8	8,4	9,0	9,6	10,2	10,8	11,4	12,0	12,6	13,2	13,8	14,4
21 x ½" (12,5mm)	Simple supported	M_{Rd} = 385 kNm	q_{vRd} (kN/m^2)	-	-	-	17,0	14,0	11,6	9,7	8,1	6,7	5,5	4,6	3,7	3,0	2,3	-
	Fixed in 1 end			-	-	-	19,5	16,2	13,5	11,3	9,5	8,0	6,7	5,6	4,7	3,8	3,1	-
	Fixed in 2 ends			-	-	-	22,0	18,3	15,4	13,0	11,0	9,3	7,9	6,7	5,6	4,7	3,9	-
	Simple supported	M_{rev} = 204 kNm	q_{vrev} (kN/m^2)	-	-	-	6,9	5,3	4,0	3,0	2,1	1,4	0,8	0,3	-0,2	-0,6	-0,9	-
	Fixed in 1 end			-	-	-	8,2	6,4	5,0	3,8	2,9	2,1	1,4	0,8	0,3	-0,1	-0,5	-
	Fixed in 2 ends			-	-	-	9,5	7,6	6,0	4,7	3,7	2,8	2,0	1,4	0,8	0,4	-0,1	-
		Balance load	q_{vbal} (kN/m^2)	-	-	-	4,2	3,0	2,0	1,2	0,6	0,0	-0,5	-0,9	-1,2	-1,5	-1,8	-
		V_{Rd} = 144 kN	q_{vvRd} (kN/m^2)	-	-	-	11,1	10,0	9,1	8,2	7,5	6,8	6,2	5,7	5,2	4,7	4,3	-
	Simple supported	M_{REI120} = 303 kNm	$q_{vmREI120}$ (kN/m^2)	-	-	-	12,4	10,1	8,2	6,7	5,4	4,3	3,4	2,6	2,0	1,4	0,9	-
	Fixed in 1 end			-	-	-	15,6	12,8	10,6	8,7	7,2	5,9	4,9	3,9	3,2	2,5	1,9	-
	Fixed in 2 ends			-	-	-	18,7	15,5	12,9	10,8	9,0	7,6	6,3	5,3	4,4	3,6	2,9	-
	Simple supported	Eigenfrequencies	$f_{,1}$ (Hz)	-	-	-	7	6	5	5	4	4	4	3	3	3	3	-
	Fixed in 1 end			-	-	-	10	9	8	7	7	6	6	5	5	5	4	-
	Fixed in 2 ends			-	-	-	14	13	11	10	10	9	8	8	7	6	6	-
		Camber	f_{lev} (mm)	-	-	-	29	30	29	27	23	17	8	-4	-18	-37	-59	-

Reinforcement			Span (m)	6,0	6,6	7,2	7,8	8,4	9,0	9,6	10,2	10,8	11,4	12,0	12,6	13,2	13,8	14,4
23 x ½" (12,5mm)	Simple supported	M_{Rd} = 411 kNm	q_{vRd} (kN/m^2)	-	-	-	-	15,3	12,7	10,6	8,9	7,4	6,2	5,2	4,3	3,5	2,8	2,2
	Fixed in 1 end			-	-	-	-	17,5	14,6	12,3	10,4	8,8	7,4	6,2	5,2	4,4	3,6	2,9
	Fixed in 2 ends			-	-	-	-	19,6	16,5	14,0	11,9	10,1	8,6	7,3	6,2	5,2	4,4	3,7
	Simple supported	M_{rev} = 215 kNm	q_{vrev} (kN/m^2)	-	-	-	-	5,8	4,5	3,4	2,5	1,7	1,1	0,5	0,1	-0,4	-0,7	-1,0
	Fixed in 1 end			-	-	-	-	7,0	5,5	4,3	3,3	2,4	1,7	1,1	0,6	0,1	-0,3	-0,6
	Fixed in 2 ends			-	-	-	-	8,1	6,5	5,1	4,0	3,1	2,3	1,6	1,1	0,6	0,1	-0,2
		Balance load	q_{vbal} (kN/m^2)	-	-	-	-	3,4	2,4	1,5	0,8	0,2	-0,3	-0,7	-1,0	-1,3	-1,6	-1,9
		V_{Rd} = 147 kN	q_{vvRd} (kN/m^2)	-	-	-	-	10,3	9,3	8,5	7,7	7,0	6,4	5,9	5,4	4,9	4,5	4,1
	Simple supported	M_{REI120} = 331 kNm	$q_{vmREI120}$ (kN/m^2)	-	-	-	-	11,4	9,4	7,7	6,3	5,1	4,1	3,3	2,5	1,9	1,4	0,9
	Fixed in 1 end			-	-	-	-	14,2	11,8	9,8	8,2	6,8	5,6	4,6	3,8	3,0	2,4	1,8
	Fixed in 2 ends			-	-	-	-	17,0	14,2	11,9	10,0	8,5	7,1	6,0	5,0	4,2	3,4	2,8
	Simple supported	Eigenfrequencies	$f_{,1}$ (Hz)	-	-	-	-	6	5	5	4	4	4	3	3	3	3	3
	Fixed in 1 end			-	-	-	-	9	8	7	7	6	6	5	5	5	4	4
	Fixed in 2 ends			-	-	-	-	12	11	10	9	9	8	7	7	6	6	6
		Camber	f_{lev} (mm)	-	-	-	-	33	33	31	28	22	14	3	-11	-29	-50	-76

Reinforcement			Span (m)	6,0	6,6	7,2	7,8	8,4	9,0	9,6	10,2	10,8	11,4	12,0	12,6	13,2	13,8	14,4
25 x ½" (12,5mm)	Simple supported	M_{Rd} = 436 kNm	q_{vRd} (kN/m^2)	-	-	-	-	-	13,8	11,5	9,7	8,2	6,9	5,7	4,8	4,0	3,2	2,6
	Fixed in 1 end			-	-	-	-	-	15,7	13,2	11,2	9,5	8,1	6,8	5,8	4,9	4,1	3,4
	Fixed in 2 ends			-	-	-	-	-	17,6	14,9	12,7	10,9	9,3	7,9	6,8	5,8	4,9	4,1
	Simple supported	M_{rev} = 226 kNm	q_{vrev} (kN/m^2)	-	-	-	-	-	4,9	3,8	2,8	2,0	1,4	0,8	0,3	-0,1	-0,5	-0,8
	Fixed in 1 end			-	-	-	-	-	5,9	4,7	3,6	2,7	2,0	1,3	0,8	0,3	-0,1	-0,5
	Fixed in 2 ends			-	-	-	-	-	6,9	5,6	4,4	3,4	2,6	1,9	1,3	0,8	0,3	-0,1
		Balance load	q_{vbal} (kN/m^2)	-	-	-	-	-	2,7	1,8	1,1	0,5	0,0	-0,5	-0,9	-1,2	-1,5	-1,7
		V_{Rd} = 150 kN	q_{vvRd} (kN/m^2)	-	-	-	-	-	9,6	8,7	8,0	7,3	6,6	6,1	5,6	5,1	4,7	4,3
	Simple supported	M_{REI120} = 359 kNm	$q_{vmREI120}$ (kN/m^2)	-	-	-	-	-	10,5	8,7	7,2	5,9	4,9	3,9	3,1	2,5	1,9	1,3
	Fixed in 1 end			-	-	-	-	-	13,0	10,9	9,1	7,7	6,4	5,3	4,4	3,6	2,9	2,3
	Fixed in 2 ends			-	-	-	-	-	15,5	13,1	11,1	9,4	7,9	6,7	5,7	4,8	4,0	3,3
	Simple supported	Eigenfrequencies	$f_{,1}$ (Hz)	-	-	-	-	-	5	5	4	4	4	3	3	3	3	3
	Fixed in 1 end			-	-	-	-	-	8	7	6	6	6	5	5	4	4	4
	Fixed in 2 ends			-	-	-	-	-	11	10	9	9	8	7	7	6	6	6
		Camber	f_{lev} (mm)	-	-	-	-	-	36	35	32	27	20	9	-4	-21	-42	-67

Reinforcement			Span (m)	6,0	6,6	7,2	7,8	8,4	9,0	9,6	10,2	10,8	11,4	12,0	12,6	13,2	13,8	14,4
27 x ½" (12,5mm)	Simple supported	M_{Rd} = 460 kNm	q_{vRd} (kN/m^2)	-	-	-	-	-	-	12,4	10,5	8,9	7,5	6,3	5,3	4,4	3,7	3,0
	Fixed in 1 end			-	-	-	-	-	-	14,2	12,0	10,2	8,7	7,4	6,3	5,3	4,5	3,8
	Fixed in 2 ends			-	-	-	-	-	-	15,9	13,6	11,6	10,0	8,6	7,3	6,3	5,4	4,5
	Simple supported	M_{rev} = 237 kNm	q_{vrev} (kN/m^2)	-	-	-	-	-	-	4,2	3,2	2,4	1,6	1,0	0,5	0,1	-0,3	-0,7
	Fixed in 1 end			-	-	-	-	-	-	5,1	4,0	3,1	2,3	1,6	1,0	0,5	0,1	-0,3
	Fixed in 2 ends			-	-	-	-	-	-	6,0	4,8	3,8	2,9	2,2	1,6	1,0	0,5	0,1
		Balance load	q_{vbal} (kN/m^2)	-	-	-	-	-	-	2,1	1,4	0,7	0,2	-0,3	-0,7	-1,0	-1,3	-1,6
		V_{Rd} = 153 kN	q_{vvRd} (kN/m^2)	-	-	-	-	-	-	9,0	8,2	7,5	6,9	6,3	5,8	5,3	4,9	4,5
	Simple supported	M_{REI120} = 386 kNm	$q_{vmREI120}$ (kN/m^2)	-	-	-	-	-	-	9,7	8,1	6,7	5,5	4,6	3,7	3,0	2,3	1,8
	Fixed in 1 end			-	-	-	-	-	-	12,0	10,1	8,5	7,2	6,0	5,0	4,2	3,4	2,8
	Fixed in 2 ends			-	-	-	-	-	-	14,2	12,1	10,3	8,8	7,5	6,3	5,4	4,5	3,8
	Simple supported	Eigenfrequencies	$f_{,1}$ (Hz)	-	-	-	-	-	-	5	4	4	4	3	3	3	3	3
	Fixed in 1 end			-	-	-	-	-	-	7	7	6	6	5	5	4	4	4
	Fixed in 2 ends			-	-	-	-	-	-	10	9	9	8	7	7	6	6	6
		Camber	f_{lev} (mm)	-	-	-	-	-	-	39	37	32	25	16	3	-13	-33	-58

Notes:

- Consequence Class CC2
- Eigenfrequencies are calculated with E = 42 GPa including 50% addition for interaction with adjacent decks and with load corresponding to 1/3 of the cracking load
- Tolerance of cambers is +- 50%
- Restrained moment capacity is assumed to be 34 kNm/m
- No prestressed reinforcement in the top
- Prestressing in the bottom = 91 kN per cable (may vary)
- Loads are denominated excluding self-weight
- Moment capacity (Mxxx) is specified for simple supported decks
- Moment capacity can be increased by increasing the restrained moment capacity
- A partical factor of 1.0 of the deck's self-weight is applied
- Eigenfrequencies are calculated assuming fully restrained support of the deck
- Balance load and shear capacity are indicated for simple supported decks

TASO +10.600

1:50

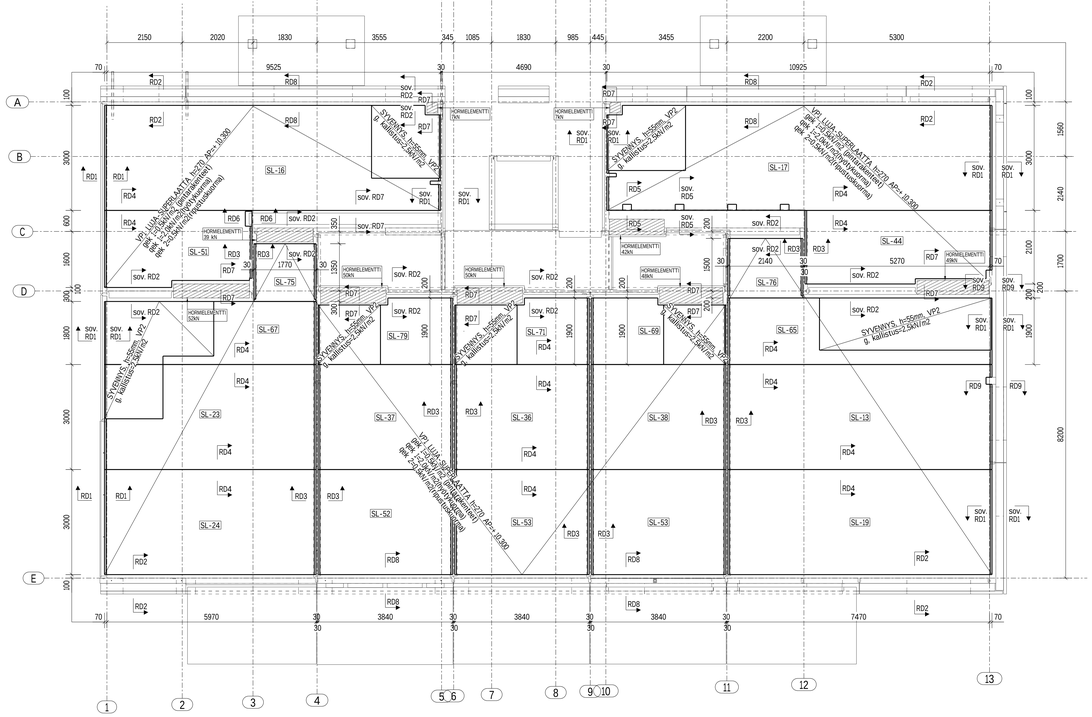

ULKOSEINÄ/SUPERLAATAN LIITOS

RD1 - RD1

1:10

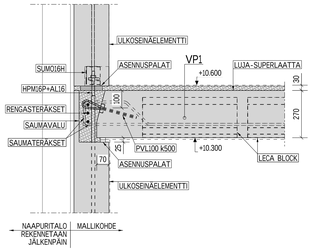

EI KANTAVAULKOSEINÄ/SUPERLAATAN LIITOS

RD2 - RD2

1:10

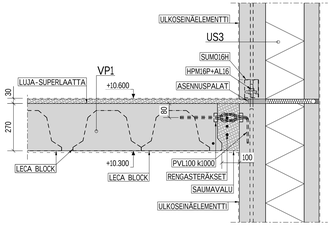

VÄLISEINÄ/SUPERLAATAN LIITOS

RD3 - RD3

1:10

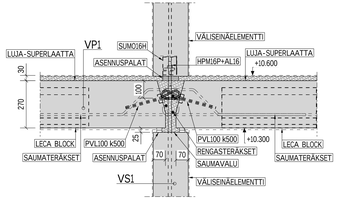

SUPERLAATTOJEN VÄLINEN LIITOS

RD4 - RD4

1:10

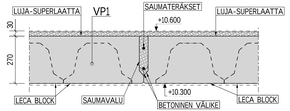

HAMMERHEAD LIITOS

RD5 - RD5

1:10

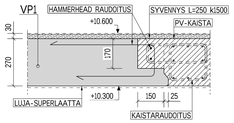

BLADE LIITOS

RD6 - RD6

1:10

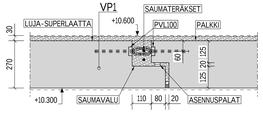

HORMIELEMENTTI/SUPERLAATAN LIITOS

RD7 - RD7

1:10

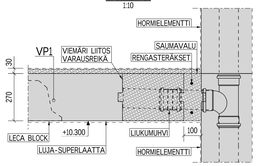

PARVEKELAATTA/SUPERLAATAN LIITOS

RD8 - RD8

1:10

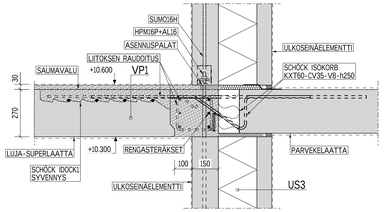

AUKKO SUPERLAATASSA

RD9 - RD9

1:10

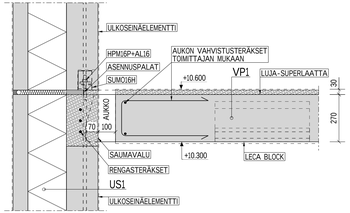

LIITTYVÄT ASIAKIRJAT

ASIAKIRJANUMERO	SISÄLTÖ	SUUNNITTELIJA
0901	RAKENNEYHTYMÄ	
3002	VALIPOHJAN KATTO, TASO =10.600, 2KRS.	
3202	2KRS. KATTO, LAATASTON SAUMARAUDOITUS	
3500	ELEMENTTILUETTELO, LUJA-SUPERLAATAT, MITAPIIRUSTUKSET	
ARK 4417-2002	TYÖPIIRUSTUS, POHJAPIIRROS 2. KERROS	
SÄH 10002	SÄHKÖPIIRUSTUS, RSAT, 2KRS.	
LVI 1606/102	VESIJOHDOT JA VIEMÄRIT, 2. KERROS	
LVI 1606/202	LÄMPÖJOHDOT, 2. KERROS	
LVI 1606/302	ILMANVAIHTO, 2. KERROS	

ELEMENTTILUETTELO

ID	POS	Nimi	Mitat [mittu1]	kpl	Paino [t]
	SL-13	LUJA-SUPERLAATTA	269x2999x7540	1	11.4
	SL-16	LUJA-SUPERLAATTA	270x3000x9595	1	15.6
	SL-17	LUJA-SUPERLAATTA	270x3000x10995	1	17.7
	SL-19	LUJA-SUPERLAATTA	269x2999x7540	1	11.3
	SL-23	LUJA-SUPERLAATTA	270x2999x6040	1	9.2
	SL-24	LUJA-SUPERLAATTA	269x2999x6040	1	9.5
	SL-36	LUJA-SUPERLAATTA	269x2999x3840	1	5.9
	SL-37	LUJA-SUPERLAATTA	269x2999x3840	1	6.0
	SL-38	LUJA-SUPERLAATTA	269x2999x3840	1	6.0
	SL-44	LUJA-SUPERLAATTA	269x2100x5340	1	5.7
	SL-51	LUJA-SUPERLAATTA	270x2199x4210	1	4.8
	SL-52	LUJA-SUPERLAATTA	269x2999x3840	1	6.4
	SL-53	LUJA-SUPERLAATTA	269x2999x3840	2	6.4
	SL-65	LUJA-SUPERLAATTA	270x1900x7540	1	7.7
	SL-67	LUJA-SUPERLAATTA	270x1800x6040	1	5.7
	SL-69	LUJA-SUPERLAATTA	270x1900x3840	1	3.9
	SL-71	LUJA-SUPERLAATTA	270x1899x3840	1	3.8
	SL-75	LUJA-SUPERLAATTA	270x2549x1770	1	1.8
	SL-76	LUJA-SUPERLAATTA	270x1700x2140	1	2.1
	SL-79	LUJA-SUPERLAATTA	269x1900x3840	1	3.8

RAKENTEEN SUUNNITELTU KÄYTTÖIKÄ:	50 VUOTTA
PALOLUOKKA:	PALOLUOKKA P1
TOLERANSIT:	KANTAVAT RAKENTEET R60, ELLEI TOISIN MAINITTU
	PAIKALLAVALUT: NORMAALILUOKKA(RT-07-2013)
	ELEMENTIT: BETONIELEMENTTIEN TOLERANSIT SFS-EN 13670
	ELLEI ELEMENTTITYÖSELOSTEESSA TOISIN MAINITA
	TERÄSRAKENTEET: STANDARDIN SFS EN 1090-2 MUKAAN
RASITUSLUOKAT:	XC1 SISÄTILAT
	XC3, XD1, XF1 ULKOTILAAN RASITTUVAT RAKENTEET, JULKISIVUN ULKOKUORI
BETONI:	SISÄTILAT: C30 / 37, ELLEI TOISIN MAINITTU
	ULKOTILAT: C35/40, ELLEI TOISIN MAINITTU
	ELEMENTTIRAKENTEET: ERIKOISPIIRUSTUSTEN MUKAAN
	MAX RAEKOKO: 16mm, SALMIVIIKALIT 8mm
	BETONIPEITE SISÄTILAT: 20mm, ELLEI TOISIN MAINITTU, SALLITTU POIKKEAMA 10mm
	BETONIPEITE ULKOTILAT: 35mm, ELLEI TOISIN MAINITTU, SALLITTU POIKKEAMA 10mm
BETONITERÄKSET:	T=500HW TAI B500B HITSATTAVA (SFS1215 TAI SFS1269)
	K=B500A VERKOT(SFS1257)
	E=B600KX RUOSTUMATONTERÄS (SFS1259)
KUORMAT:	g=PYSYVÄ KUORMA q=HYÖTYKUORMA
SIIRUMAMUSLUOKKA:	CC3 KANTAVAA RUNKO, CC1 KEVYET VÄLISEINÄT
TOTEUTUSLUOKKA:	3
LAATASTO:	SUPERLAATASTO N=270 ELLEI TOISIN MERKITTY, SL-270
	SUPERLAATASTO N=220 ELLEI TOISIN MERKITTY, SL-220
	SUUNNITELTU TUKIPINTA: SL-270, SIINÄN PÄÄLLÄ 70mm
	SL-220, SIINÄN PÄÄLLÄ 70mm
SUPERLAATTOJEN PITUUSSUUNTAISISSA SAUMOISSA SAA VIEDÄ ENINTÄÄN 2 SÄHKÖPUTKEA D20/SAUMA	
SUPERLAATTOJEN PÄÄTY- JA VÄLISEINÄSAUMOISSA SAA VIEDÄ ENINTÄÄN 3 SÄHKÖPUTKEA D20	
RAKENNETERÄKSET:	PUTKIPROFILIT S355J2H
	MUOTOTERÄKSET S235JR(G2, S355J2G2, S355J2G4
	HITSAUSLUOKKA C (SFS-EN ISO 5817)
HITSIT:	PIENHITSIT TMPÄRI JAITAI MOL PUOLIN OHLEEMMAN SENAMÄN MUKAAN, ELLEI MUUTA MAINITTU
KORROOSIOSUOJAUS UKONA:	KUUMASINKITYS 70 uM RASITUSLUOKKA M3

YHTEENVETO ELEMENTEISTÄ	kpl	Paino [t]
	21	150.6

TOTEUTUSTA VARTEN

Rev.	Muutos	Suun.	Tark.	Hyv.	Pvm

PROJEKTI: 51	PROJEKTINRO: 51345	OSANUMERO: 6	ERÄNUMERO/ERÄNUMERON VAIHTO:
PÄÄKOHDE: UUDISRAKENNUS		PIIRUSTUKSEN NIMI: RAKENNEPIIRUSTUS	
KOHDE: AS OY ESPOON MALLIKOHDE ESPOO		MITTAKAAVA: TASO =10.600, 2KRS.	1:10
		LUJA-SUPERLAATASTON ELEMENTTIKAAVIO JA DETALJIT	1:50
TEHN.: I. Chichkanov	PVM: 19.02.2019		
TARK.: A. Pöyhönen	HYV.: S. Mäkelä		

PÖYRY FINLAND OY
Jaakonkatu 3, PL 1000
FI-01621 VANTAA, FINLAND
Tel. +358 10 3311

SUUNNITTELIJA A / TYÖNUMERO: 101005576
RAK
TIEDOSTO NRO: 3102
MUUTOS:
SIVU:

© PÖYRY FINLAND OY - USE AND REPRODUCTION ONLY BY OWNERS PERMISSION

Tunnus	Sivu	Kpl	kg/kpl	Rev	Pvm	LM
SL-80		1				X
SL-81		1				X
SL-82		1				X

LIITTYVÄT ASIAKIRJAT

ASIAKIRJANUMERO	SISÄLTÖ	SUUNNITTELIJA
0901	RAKENNEYYPIT	
3000-3009	TASOPIIRUSTUKSET	
3100-3109	SUPERLAATASTON ELEMENTTIKAAVIOT JA DETALJIT	
3200-3209	LAATASTON SAUMARAUDOITUS	
ARK 4417-2000 - 4417-2009	TYÖPIIRUSTUS, POHJAPIIRROKSET	
SÄH 150010 - 150019	SÄHKÖPIIRUSTUKSET, REIÄT	
LVI 16061/100 - 16061/109	VESIJOHDOT JA VIEMÄRIT	
LVI 16061/200 - 16061/209	LÄMPÖJOHDOT	
LVI 16061/300 - 16061/309	ILMANVAIHTO	

HUOM!

- NOSTOLENKIT JA NIIDEN SIJAINTI ELEMENTTITOIMITTAJAN MUKAAN (LOPULLISET ELEMENTTIKUVAT)
- LOPULLINEN KEVYTSORAHARKKOKAAVIO ELEMENTTITOIMITTAJAN MUKAAN
- MÄRKÄTILOJEN SUPERLAATTAELEMENTIN KALLISTUKSET TEKEE VALMIIKSI ELEMENTTITOIMITTAJA
- MUIDEN SUPER-LAATTATUOTANTOON LIITTYVIEN ERIKOISSUUNNITELIJOIDEN SUUNNITELMAT (MM.LVIS, PUNOS- JA RAUDOITUS) ERILLISSUUNNITELMIEN MUKAAN

YHTEENVETO VALUYKSIKÖISTÄ	Sivuja	Kpl	kg
Kaikki	1+3	3	
Tässä revisiossa	1+3	3	

TOTEUTUSTA VARTEN

Rev.	Muutos	Suun.	Tark.	Hyv.	Pvm

K.OSA/KYLÄ: 51
KORTTELI/TILA: 51345
TONTTI/RNRO: 6
VIRANOMAISTEN ARKISTOMERKINTÖJÄ VARTEN
RATU

RAKENNUSTOIMENPIDE: UUDISRAKENNUS
PIIRUSTUSLAJI: RAKENNEPIIRUSTUS
JUOKSEVA NRO

KOHDE: AS OY ESPOON MALLIKOHDE
ESPOO

PIIRUSTUKSEN SISÄLTÖ: ELEMENTTILUETTELO
LUJA-SUPERLAATAT
MITTAPIIRUSTUKSET

MITTAKAAVA

SUUN.: I. Chichkanov
PVM: 19.02.2019
TARK.: A. Pöyhönen
HYV.: S. Mäkelä

PÖYRY FINLAND OY
P.O.Box 52 (Jaakonkatu 3)
FI-01621 VANTAA, Finland
Tel. +358 10 3311

SUUNNITTELUALA: RAK
TYÖNUMERO: 101005576
PIIR. NRO.: 3500
MUUTOS
SIVU

© PÖYRY FINLAND OY - USE AND REPRODUCTION ONLY BY OWNERS PERMISSION

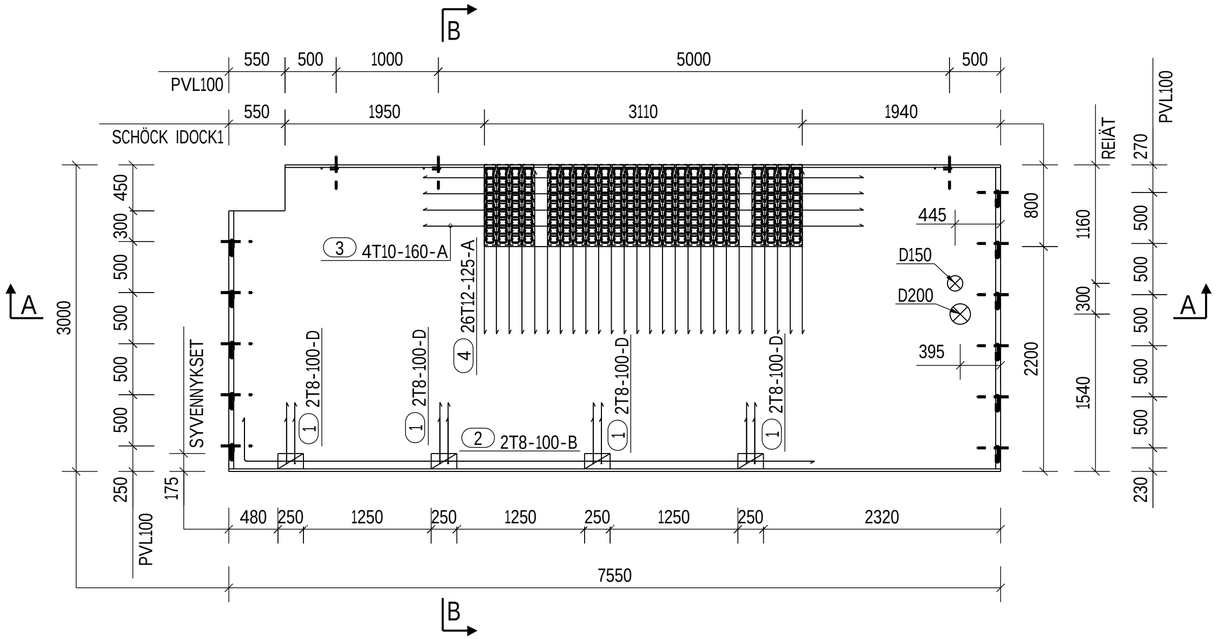

B - B
1:40

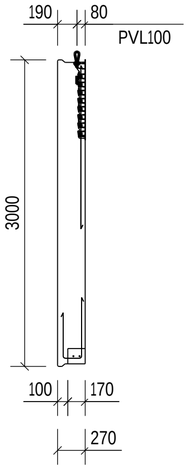

A - A
1:40

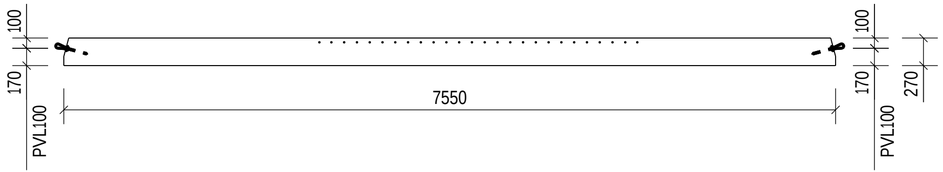

SUUNNITTELUN LÄHTÖTIEDOT

Paloluokka	R60
Rasitusluokka	XC1
Suunniteltu käyttöikä	50v.
Seuraamusluokka	CC3

TUOTETIEDOT

Maksimi raekoko	12 mm
Päästölujuus	C30/37
Tukipinta	70 mm
Minimitukipinta asennuksen jälkeen	60 mm

VALUTARVIKELUETTELO

PIIR. NUMERO	LKM	MATERIAALI
3500	1	C55/67

MÄÄRÄ	TARVIKKEET
14 kpl	PVL100 PVL connecting loop
8.5 kg	B500B ø 8
10.6 kg	B500B ø 10
36.9 kg	B500B ø 12

RAUDOITELUETTELO (LISÄTERAKSET)

RAUDOITTEET NRO	TY	LKM	LAATU	D [mm]	L [mm]	dL [mm]	PAINO YHT [kg]	TAIVUTUSMITAT [mm] a	b	c	d	e	u	v	x	TD	KOMMENTTI
1	D	8	B500B	8	1200		3.8	600	190	450						32	
2	B	2	B500B	8	5990		4.7	430	5581				90			32	
3	A	4	B500B	10	4310		10.6	4310									
4	A	26	B500B	12	1600		36.9	1600									

RAUDOITTEIDEN KOKONAISPAINO [kg]: 56.1

TY	A	B	D	
Raudoitteiden taivutustyypit	a	a b	a b c	Raudoitusmitat noudattavat terästen ulkopintaa

3D
1:80

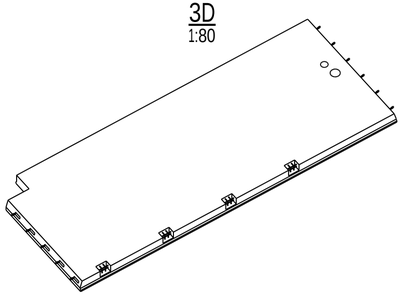

KOHDE: AS OY ESPOON MALLIKOHDE, ESPOO	PIIRUSTUKSEN SISÄLTÖ: ELEMENTTI, SL-80, LUJA-SUPERLAATTA		MITTAKAAVA: 1:40, 1:80
SUUN.: I. Chichkanov	PVM: 19.02.2019	MITTAPIIRUSTUS	
TARK.: A. Pöyhönen	HYV.: S. Mäkelä		
PÖYRY	SUUNNITTELUALA: RAK	TYÖNUMERO: 101005576	MUUTOS
		PIIR. NRO.: 3500	SIVU: SL-80

© PÖYRY FINLAND OY - USE AND REPRODUCTION ONLY BY OWNERS PERMISSION

SUUNNITTELUN LÄHTÖTIEDOT

Paloluokka	R60
Rasitusluokka	XC1
Suunniteltu käyttöikä	50v.
Seuraamusluokka	CC3

TUOTETIEDOT

Maksimi raekoko	12 mm
Päästölujuus	C30/37
Tukipinta	70 mm
Minimitukipinta asennuksen jälkeen	60 mm

VALUTARVIKELUETTELO (LISÄTERAKSET)

PIIR. NUMERO	LKM	MATERIAALI
3500	1	C55/67

MÄÄRÄ	TARVIKKEET
7 kpl	PVL100 PVL connecting loop
2 kpl	TSK10-300-145

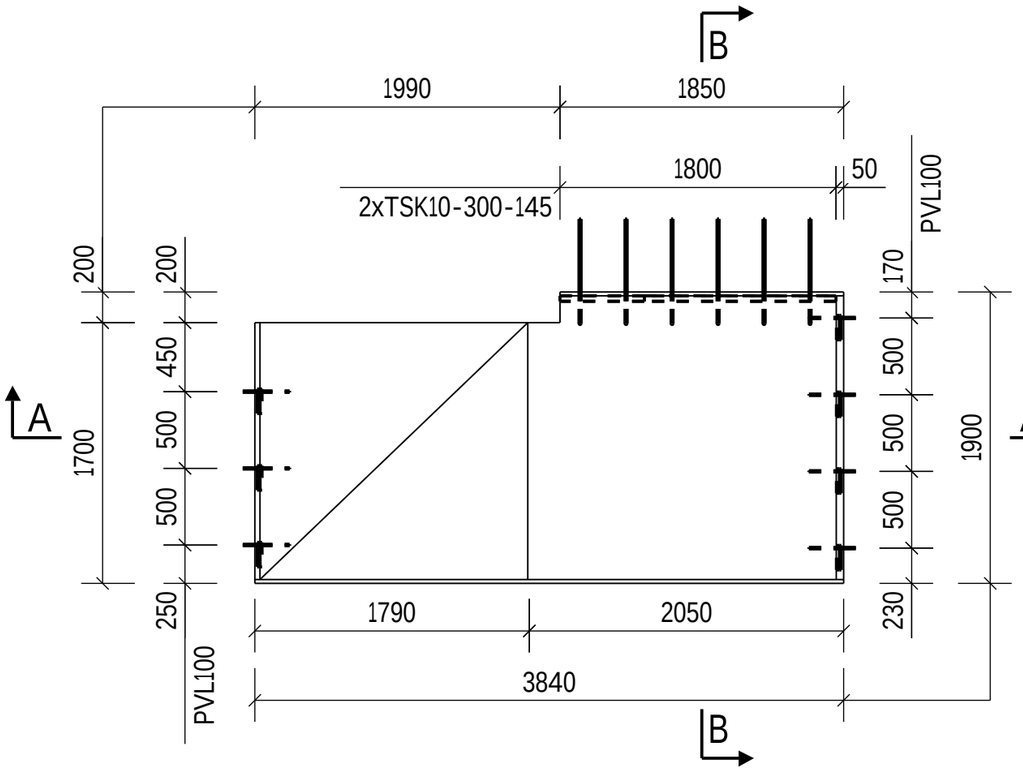

B - B
1:40

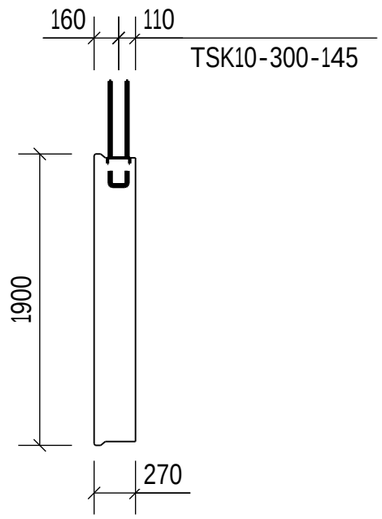

3D
1:50

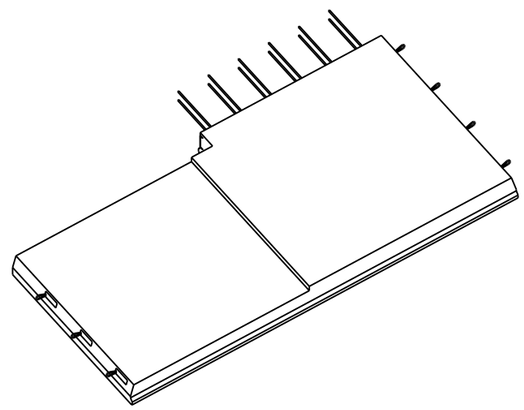

A - A
1:40

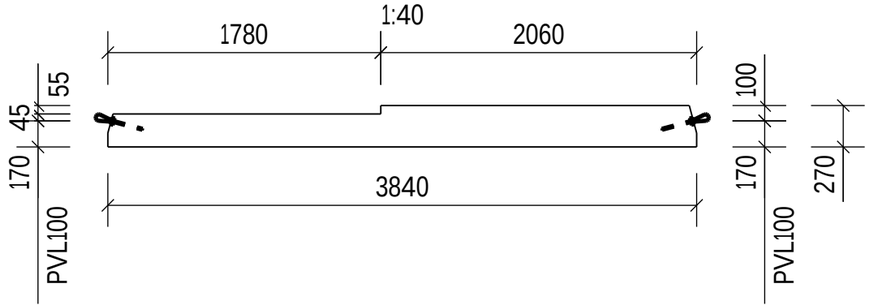

KOHDE AS OY ESPOON MALLIKOHDE ESPOO		PIIRUSTUKSEN SISÄLTÖ ELEMENTTI SL-81, LUJA-SUPERLAATTA MITTAPIIRUSTUS	MITTAKAAVA 1:40 1:50
SUUN. I. Chichkanov	PVM 19.02.2019		
TARK. A. Pöyhönen	HYV. S. Mäkelä		
PÖYRY		SUUNNITTELUALA RAK / TYÖNUMERO 101005576	MUUTOS
		PIIR. NRO. 3500	SIVU SL-81

© PÖYRY FINLAND OY - USE AND REPRODUCTION ONLY BY OWNERS PERMISSION

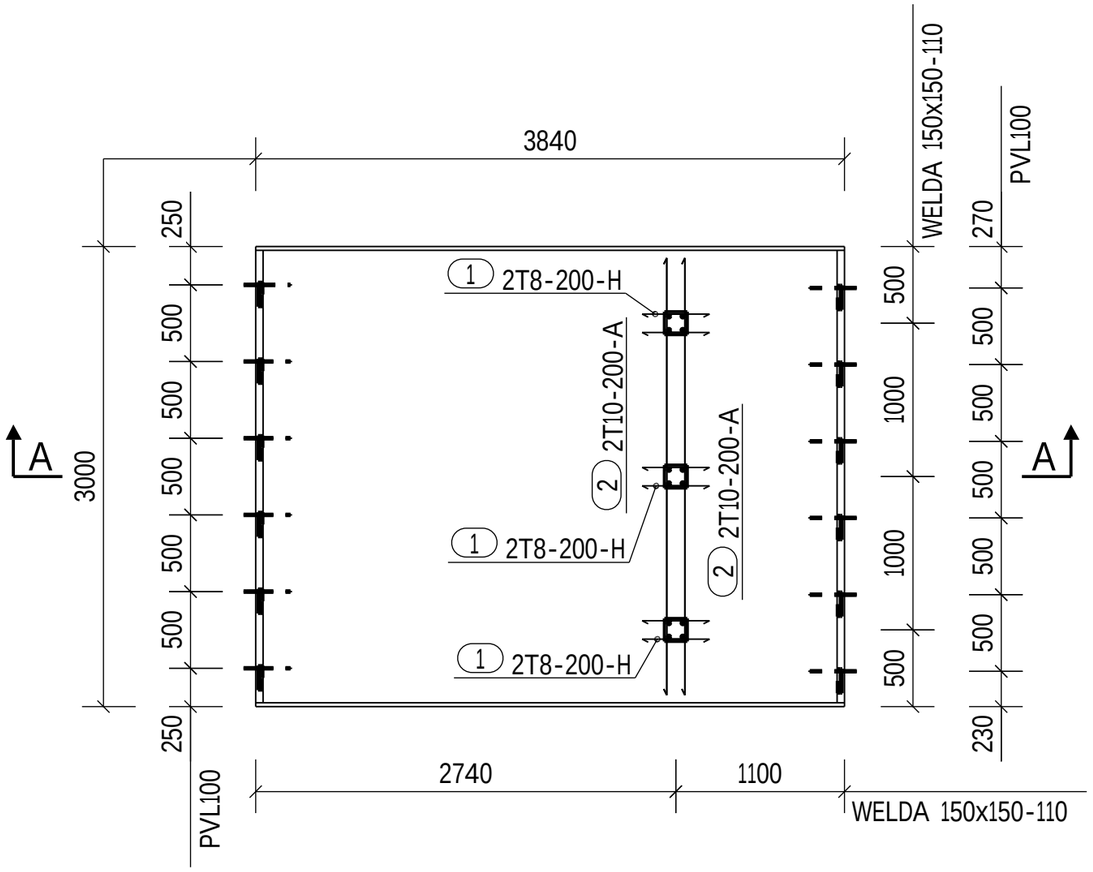

A - A
1:40

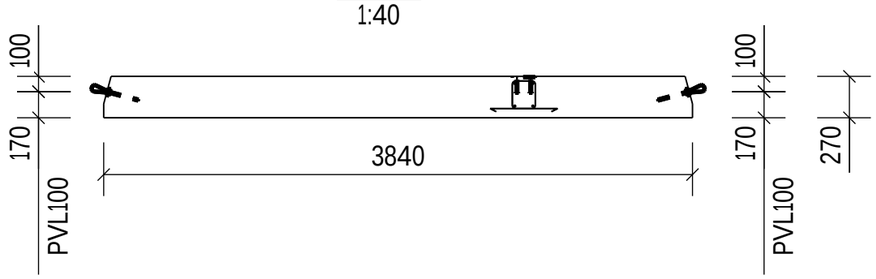

SUUNNITTELUN LÄHTÖTIEDOT

Paloluokka	R60
Rasitusluokka	XC1
Suunniteltu käyttöikä	50v.
Seuraamusluokka	CC3

TUOTETIEDOT

Maksimi raekoko	12 mm
Päästölujuus	C30/37
Tukipinta	70 mm
Minimitukipinta asennuksen jälkeen	60 mm

VALUTARVIKELUETTELO

PIIR. NUMERO	LKM	MATERIAALI
3500	1	C55/67

MÄÄRÄ	TARVIKKEET
12 kpl	PVL100 PVL connecting loop
3 kpl	WELDA 150x150-110 Peikko WELDA150x150-110
2.5 kg	B500B ø 8
7.0 kg	B500B ø 10

RAUDOITELUETTELO (LISÄTERAKSET)

RAUDOITTEET NRO	TY	LKM	LAATU	D [mm]	L [mm]	dL [mm]	PAINO YHT [kg]	TAIVUTUSMITAT [mm] a	b	c	d	e	u	v	x	TD	KOMMENTTI
1	H	6	B500B	8	1060		2.5	300	190	160	190	300				32	
2	A	4	B500B	10	2850		7.0	2850									

RAUDOITTEIDEN KOKONAISPAINO [kg]: 9.6

TY	A	H	
Raudoitteiden taivutustyypit	a	a b c d e	Raudoitusmitat noudattavat terästen ulkopintaa

3D
1:50

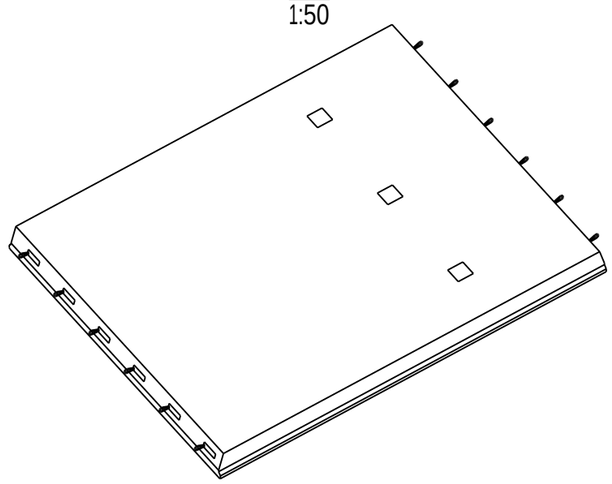

KOHDE AS OY ESPOON MALLIKOHDE ESPOO		PIIRUSTUKSEN SISÄLTÖ ELEMENTTI SL-82, LUJA-SUPERLAATTA	MITTAKAAVA 1:40 1:50
SUUN. I. Chichkanov	PVM 19.02.2019	MITTAPIIRUSTUS	
TARK. A. Pöyhönen	HYV. S. Mäkelä		
PÖYRY	SUUNNITTELUALA RAK	TYÖNUMERO 101005576 PIIR. NRO. 3500	MUUTOS SIVU SL-82

© PÖYRY FINLAND OY - USE AND REPRODUCTION ONLY BY OWNERS PERMISSION

VALUTARVIKELUETTELO

PIIR. NUMERO	LKM	MATERIAALI	PINTA-ALA [m2]	MÄÄRÄ	YKS
SL_T-4, LUJA-SU	1		11.52		
		C55/67		3.04	m³
			ELEMENTTI PAINO:	7.61	t

MÄÄRÄ	TARVIKKEET
4 kpl	PUNOSLENKKI 1630/1860 1xØ12.5, L = 3170, LISÄTAIVUTUS

CASE 1 - NO BLOCKS

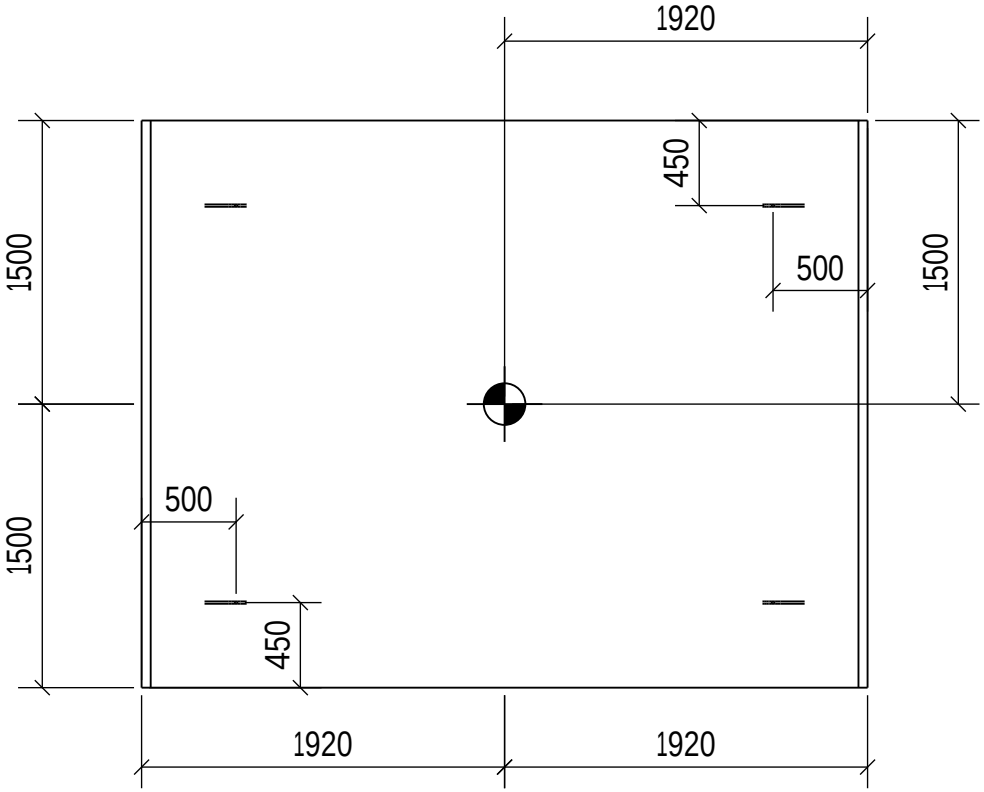

VALUTARVIKELUETTELO

PIIR. NUMERO	LKM	MATERIAALI	PINTA-ALA [m2]	MÄÄRÄ	YKS
SL_T-3, LUJA-SU	1		11.52		
		C55/67		3.04	m³
			ELEMENTTI PAINO:	7.07	t

MÄÄRÄ	TARVIKKEET
4 kpl	PUNOSLENKKI 1630/1860 1xØ12.5, L = 3170, LISÄTAIVUTUS

CASE 2 - BLOCKS ONLY, NEGATIVE DENSITY

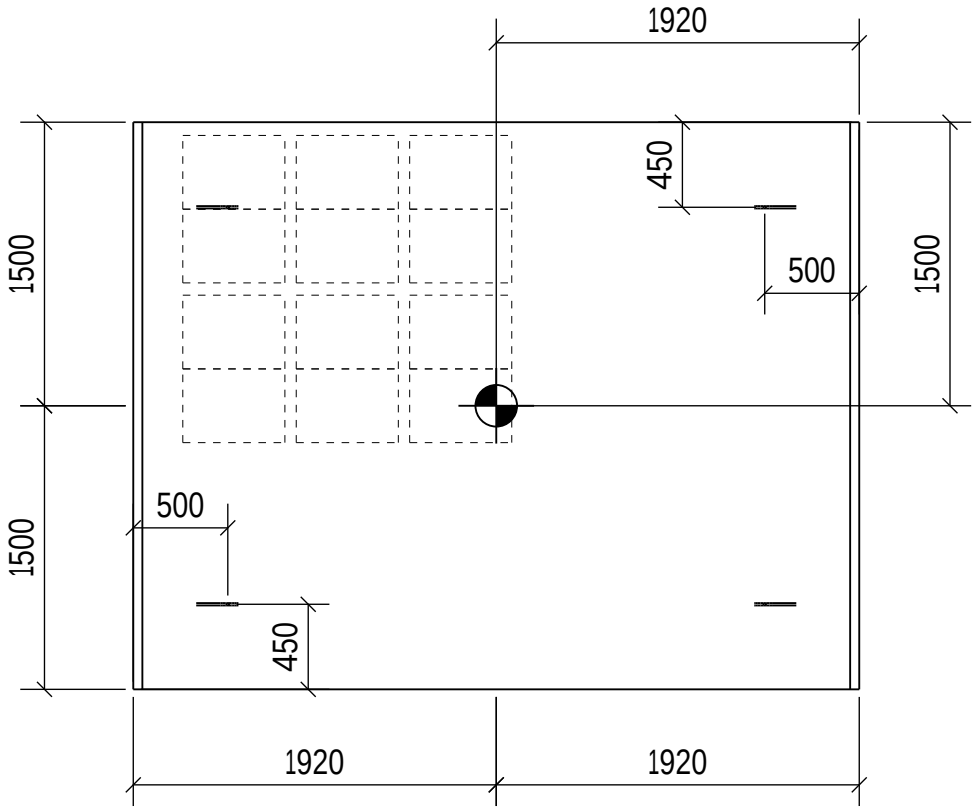

VALUTARVIKELUETTELO

PIIR. NUMERO	LKM	MATERIAALI	PINTA-ALA [m2]	MÄÄRÄ	YKS
SL_T-1, LUJA-SU	1		11.52		
		C55/67		3.04	m³
			ELEMENTTI PAINO:	8.00	t

MÄÄRÄ	TARVIKKEET
4 kpl	PUNOSLENKKI 1630/1860 1xØ12.5, L = 3170, LISÄTAIVUTUS

CASE 3 -BLOCKS ONLY, POSITIVE DENSITY

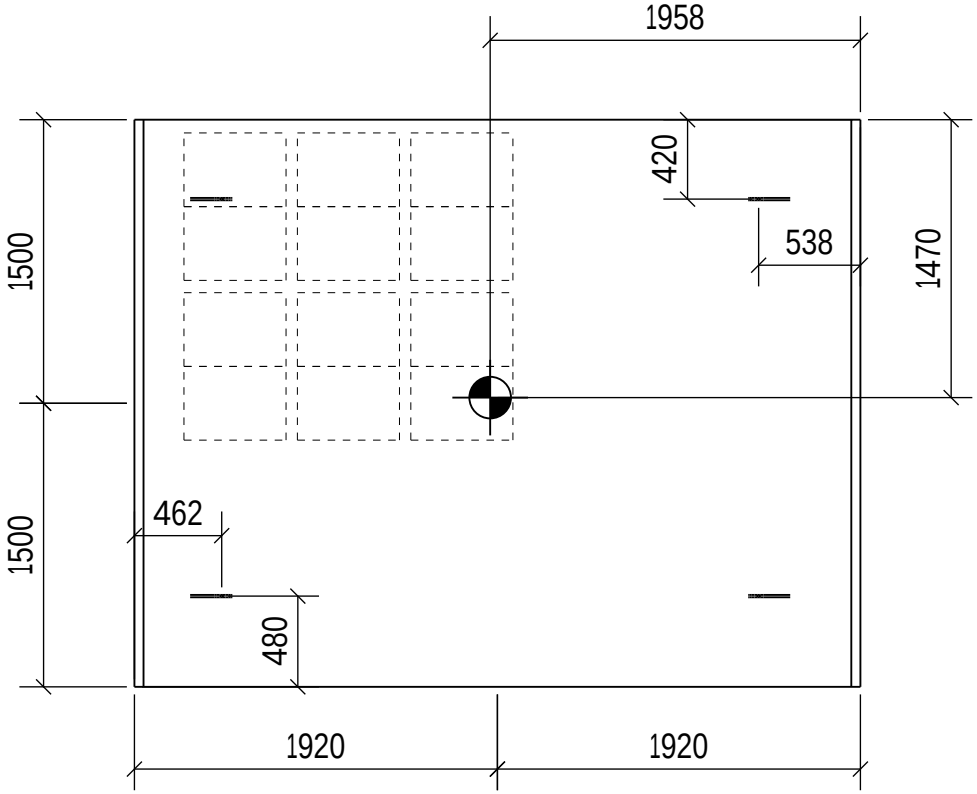

VALUTARVIKELUETTELO

PIIR. NUMERO	LKM	MATERIAALI	PINTA-ALA [m2]	MÄÄRÄ	YKS
SL_T-2, LUJA-SU	1		11.52		
		C55/67		2.66	m³
			ELEMENTTI PAINO:	7.03	t

MÄÄRÄ	TARVIKKEET
4 kpl	PUNOSLENKKI 1630/1860 1xØ12.5, L = 3170, LISÄTAIVUTUS

CASE 4 - BLOCKS AND CUTS