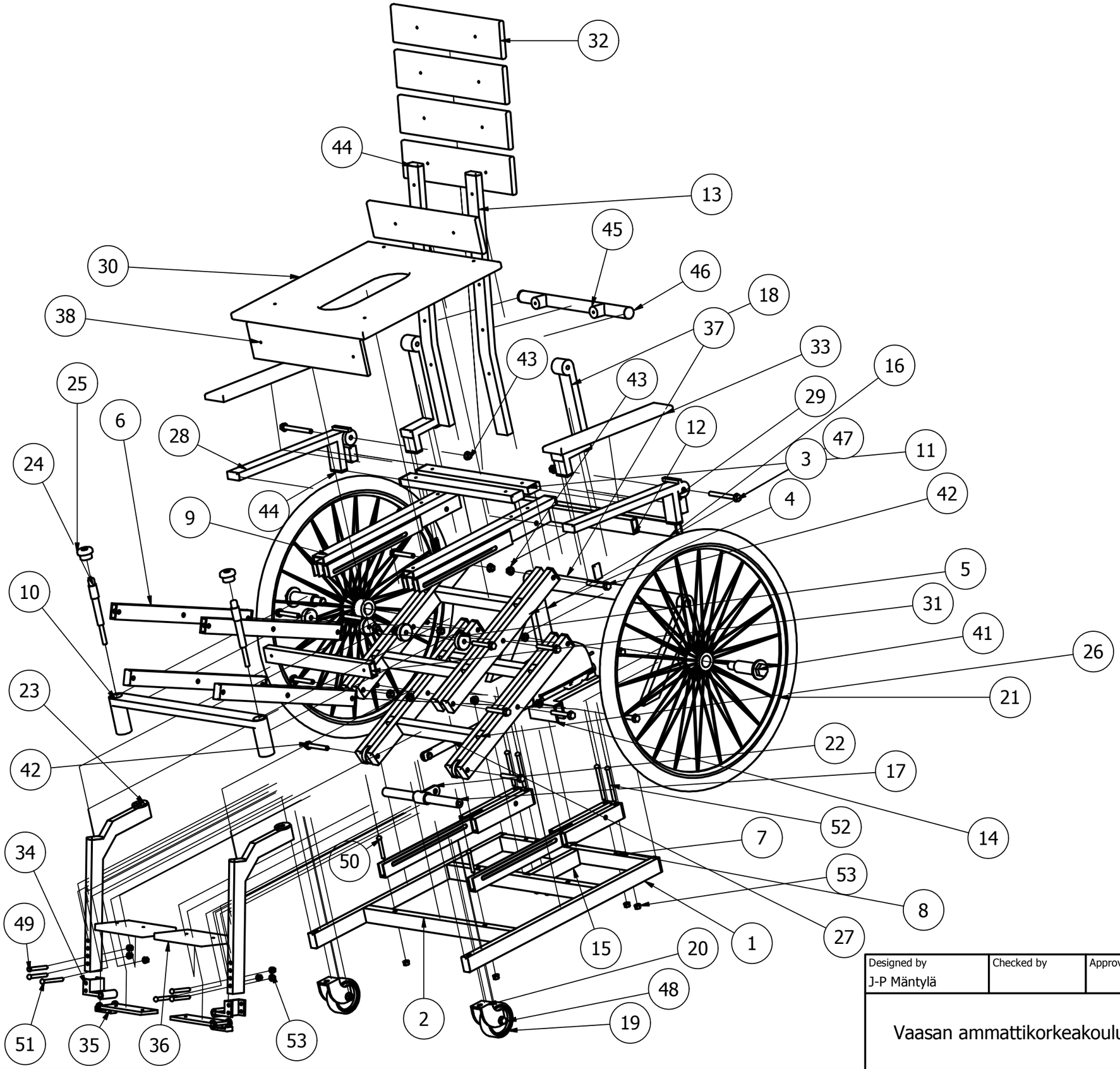

Designed by	Checked by	Approved by	Date		Date	
J-P Mäntylä					26.8.2010	

Vaasan ammattikorkeakoulu	räjäytys1	Edition	Sheet 1 / 1