Bachelor's thesis

Industrial Management and Engineering

2019

Kaisa Katajisto

BUSINESS PLAN FOR GURULOGIC MICROSYSTEMS OY

TURKU AMK
TURKU UNIVERSITY OF APPLIED SCIENCES

BACHELOR'S THESIS| ABSTRACT

TURKU UNIVERSITY OF APPLIED SCIENCES

Industrial Management and Engineering

2019 | 45 pages, 3 appendices

Kaisa Katajisto

BUSINESS PLAN FOR GURULOGIC MICROSYSTEMS OY

The objective of this thesis was to study how a specific technology created by Gurulogic Microsystems Oy could be commercialized to a new kind of product. The goal was to write a business plan addressing various aspects related to productization, competition at the market and customer evaluations.

The product was initiated by Heikki Salmela, Founder of Hesburger and Co-founder of Gurulogic Microsystems Oy, and implemented with help of Anne-Mari Lummevuo, Counsel and Patent Attorney working for Gurulogic Microsystems Oy. To figure out what kind of a product would be appropriate, nine interviews were made. Based on these interviews, the product architecture was thought in a way that it would work no matter what would be the customers area of business. For the theoretical part of thesis, help and technological explanations came from Mr. Tuomas Kärkkäinen, CTO of Gurulogic Microsystems Oy as well as literature review of entrepreneurship and researching of competitors and competing products.

This thesis acts as a business plan and as a showcase for Gurulogic Microsystems Oy. When this project was initiated, Mr. Salmela wanted first and foremost to find out, how the technologies created by Gurulogic could be used in creating new products. This required some outside-of-the-box thinking, and the results are presented in the Conclusions chapter.

KEYWORDS:

Business plan, Innovativeness, Productization

OPINNÄYTETYÖ (AMK) | TIIVISTELMÄ

TURUN AMMATTIKORKEAKOULU

Tuotantotalouden koulutusohjelma

2019 | 45 sivua, 3 liitesivua

Kaisa Katajisto

BUSINESS PLAN

- Selvitys Gurulogic Microsystems Oy:lle

Opinnäytetyön tarkoituksena on tutkia, miten Gurulogic Microsystems Oy:n luomia teknologioita voisi soveltaa uusia kaupallistettavia tuotteita suunniteltaessa. Tavoitteena oli selvittää liiketoimintasuunnitelman avulla tuotteistamiseen liittyviä seikkoja, etsiä mahdollisia kilpailijoita sekä arvioida tuotteen merkitystä mahdollisille asiakkaille.

Tutkittava teknologia päätettiin yhdessä Hesburgerin perustajan ja yrittäjä Heikki Salmelan sekä Gurulogic Microsystems Oy:lle työskentelevän patenttilakimies Anne-Mari Lummevuon kanssa. Tuotteelta haluttavat ominaisuudet selvitettiin haastattelemalla yhdeksän eri yrityksen tai kaupan edustajaa: näiden haastattelujen pohjalta mietittiin millainen tuote toimisi parhaiten riippumatta siitä, millä alalla ostajataho toimisi. Teoriaosuutta varten haastateltiin Gurulogic Microsystems Oy:n teknologiajohtajaa Tuomas Kärkkäistä sekä käytiin läpi yrittäjyyttä ja tuotteistamista käsitteleviä kirjallisia lähteitä.

Opinnäytetyö toimii yhtä aikaa sekä liiketoimintasuunnitelmana että esittelynä Gurulogic Microsystems Oy:lle. Projektin alkaessa Heikki Salmela halusi ennen kaikkea selvittää, kuinka yrityksen luomia teknologioita voisi hyödyntää kaupallisesti muilla tavoilla kuin niillä, joihin ne alun perin on luotu. Työn yhteenvedossa pohditaan mikä olisi paras toimintatapa teknologian tuotteistamiseksi.

ASIASANAT:

Liiketoimintasuunnitelma, innovatiivisuus, tuotteistaminen

CONTENT

1 INTRODUCTION **6**

1.1 Project background 6

1.2 History of presentation sharing and the idea of the Solution 7

1.3 Research questions 7

1.4 Gurulogic Microsystems Oy 8

1.5 Server node arrangement and method 9

2 FROM INNOVATION TO A PRODUCT **10**

2.1 Product development 10

2.2 Business plan 12

2.3 Chapter summary 14

3 RESEARCH QUESTIONS **16**

3.1 Content of the chapter 16

3.2 Interviews 16

3.2.1 B2C 16

3.2.2 End-users 17

3.2.3 Corporate customers 19

3.3 Optimal way of productization 21

3.4 Options of commercialization 22

3.5 Summary 24

4 MARKETS **26**

4.1 Market opportunity 26

4.2 Competitors 26

4.3 Summary 31

5 BUSINESS PLAN **32**

5.1 32

5.2 Defining markets 33

5.3 Team, product and service 34

5.4 Buyer behavior 34

5.5 System architecture 35

5.6 Chapter summary 36

6 CONCLUSIONS **37**

REFERENCES **40**

APPENDICES

Appendix 1. Saatekirje
Appendix 2. Kyselytutkimus: B2C
Appendix 3. Kyselytutkimus: Näytön jakaminen ilman piuhoja

PICTURES

Picture 1 Overview of the innovation process. (Paul Trott, 2008) 10
Picture 2 Conceptual framework of Innovation (Trott, 2008). 11
Picture 3 Chromecast device by Google. (Google Store) 27
Picture 4 How Apple TV connects with TV (Tuomas Kärkkäinen, 14.2.2019) 28
Picture 5 Different options of computer plugs in office environment (Jussi Peltola, 2018.) 29
Picture 6 ClickShare (verkkokauppa.com, 5.3.2019) 30
Picture 7 Airtame 2. (airtame.com 15.3.2019). 30
Picture 8 The marketing domain. (McDonald, 2012) 33

TABLES

Table 1 Four common factors of the products that survive in the markets. (Mital *et al.,* 2008) 12
Table 2 Red Flags in Business Plan (Barringer & Ireland, 2016) 14

1 INTRODUCTION

1.1 Project background

People give presentations every day. Some give them as professionals, while others try to sell their products and some give them at school. Even though the technology evolved, we still have problems in connecting our laptops to presentation tools, such as larger screens or to desktop computers. There are multiple different computers and phones in the markets, correspondingly variety of different cables and plugins. Most companies and schools do not have all the possible cables available all rooms, and sometimes it is not possible to send the presentations beforehand to the main computer connected to the presentation screen. Admittedly, there are also different kinds of adapters available; however there are often problems with those, too.

Given the continuing development of new technologies, one could ask how come there is not yet such a technology which would allow us to connect our devices together regardless of their brand or the manner of connection?

This thesis provides a business plan for Gurulogic Microsystems Oy (Company) and it aims to study how the aforementioned problem could be solved using technologies developed by Gurulogic Microsystems Oy and which would be the most optimal way to implement the technical solution. The studied technology was created by Gurulogic Microsystems Oy originally for the purposes of video surveillance for Hesburger to collect video stream from multiple cameras.

The project was initiated by Heikki Salmela, the Entrepreneur and the Founder of Hesburger Oy, who wanted to see whether it could be possible for students of Turku University of Applied Sciences (TUAS) to investigate productization possibilities enabled by the technologies created by Gurulogic. Three students were selected by TUAS for the assignment that consisted of an interview and an additional task testing the students´ capability of creating new business opportunities out of specific technologies patented by Gurulogic Microsystems Oy. After three weeks there was another interview, and by that time a technology had been identified that could help solve the compatibility problems referred to above. The technology created by the Company potentially provides a solution for this need, and this business plan studies whether or not it would be profitable to productize it.

1.2 History of presentation sharing and the idea of the Solution

If we look back some 15 – 20 years, we did not use technological solutions like we use them today. At schools, teachers used chalk boards and overhead projectors and we could rely to the fact that the image shown was “fitted to the right format” and only way to lose the picture was to burn the light pulp.

According to Guiding Tech and the article “*The Evolution of the Modern Laptop: From 1982 to Present*”, the first laptop that actually made a breakthrough was produced by Dell and the year was 2003. Four years later, in 2007, Apple released the first iPhone (ScienceNode, A brief history of the smartphone, 2018) and the rest is history. Today we use smartphones, laptops and tablets multiple hours per day because it is so easy and because our everyday life is tightly connected to smart devices and social media.

As the devices get smarter, we still rely mostly on cables when sharing presentations for larger audiences, because they are the easiest, though messiest, option available. As seen and felt in real life situations, one does begin to think why we do not have any better solution for screen sharing since our mobile devices are so smart?

That is the question this thesis tries to solve.

The innovation studied in this thesis is built around existing technology created by Gurulogic Microsystems Oy. The goal is to research current technologies and estimate if there would be a need in the markets for a solution that would solve the faced screen sharing problems.

1.3 Research questions

This thesis answers to two main questions and the second one is divided to two sub-questions.

1. Is there a need for the technological solution in question? If there is,
2. a) What would be the optimal way of the productization?
    - USB-stick
    - Application
    - A “jar”?

    b) What would be the optimal way of commercialization?

- Making the product by ourselves
- Licensing the technology
- Selling the technology

To find answers to these questions, nine interviews with different companies, professionals and vendors were conducted to determine if there is a need for the technology in question, in order to provide responses to the other research questions.

The interviews were conducted by phone calls, face to face and by e-mail.

Available studies and books were utilized to find theory of the subject, and lastly it was discussed with the people who have developed the studied technology in order to understand what is possible and what is not.

1.4 Gurulogic Microsystems Oy

Gurulogic Microsystems Oy was founded in 2001, Heikki Salmela decided to provide facilities for promising star-up companies, and at the same time Tuomas Kärkkäinen approached him. Salmela needed help at the same time with IT issues, the two men got together and few months later Gurulogic Microsystems Oy was created.

In 2012, a new era of technology development begun when the company grew and recruited an ex-Nokia engineer Ossi Kalevo, bringing in his valuable expertise in coding and image processing. The Company started to create its very own codec, GMVC®. Today, the company has an extensive technology and patent portfolio with over 100 patents. Company is currently very much focusing on security solutions and its vision is to become well-known provider of secured network and communication solutions in this era of cyber-attacks and data leakages. The security aspect gives competitive edge also for the studied technology.

This thesis is one attempt to show-case and commercialize the technologies created by the Company.

1.5 Server node arrangement and method

The technology in question was created by Tuomas Kärkkäinen, Ossi Kalevo and Valtteri Hakkarainen, and the patent application for their invention was filed in 2013. The patented technology relates to a server arrangement that is operable to process the data content from multiple sources into a form that is compatible to a native data rendering format of the one or more output devices and to render the data simultaneously to the output devices. Essentially, the technology thus enables delivering data in any desired format, size and quality.

It was originally meant to enable video surveillance system with devices supporting different formats of data but it was realized that it could be useful also for the purposes of screen sharing if a product was created which allows the user to wirelessly connect the presentation screen. Indeed, it is in the interest of the Company to explore how to use their technologies also in new ways, in manners different than thought when they were created. Sometimes it is difficult to think outside-of-the-box when one has been focused on one certain way to use technologies. One aim of this thesis is to provide Gurulogic some new ideas regarding how they could profit from this technology.

2 FROM INNOVATION TO A PRODUCT

2.1 Product development

> "Creativity is development of ideas; innovativeness is executing them in practice."
> (Malinen, Brask)

Corporations must be able to adapt and evolve if they wish to survive. Businesses operate with the knowledge that their competitors will inevitably come to the market with a product that changes the basis of competition. The ability to change and adapt is essential to survival. (Trott, 2008.)

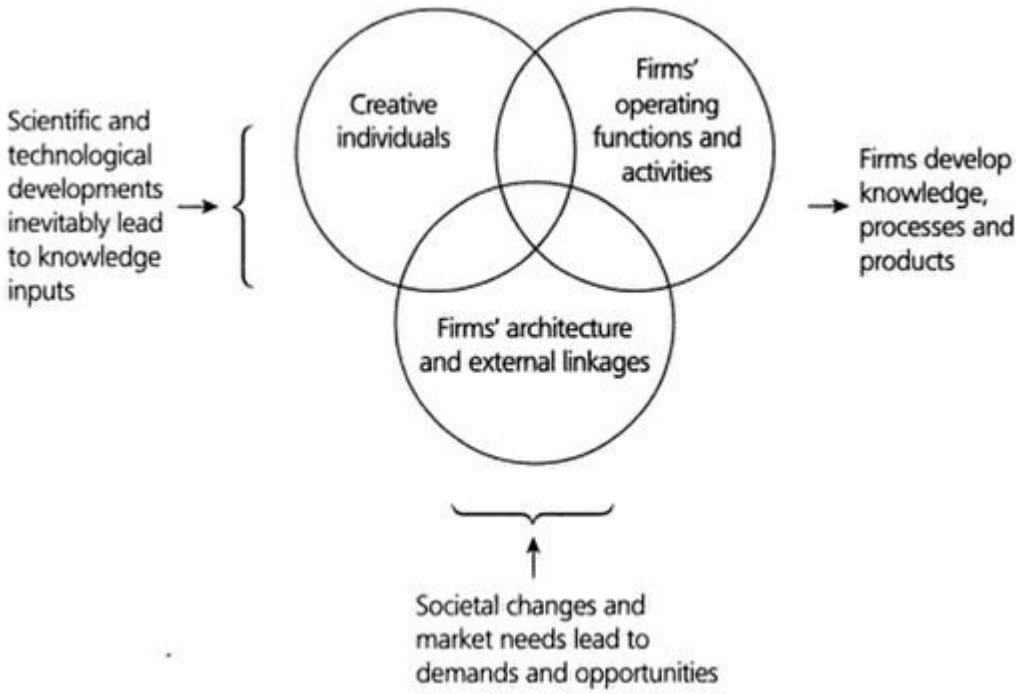

Picture 1 Overview of the innovation process. (Paul Trott, 2008)

In this thesis the product development begun by innovating new products based on technologies created by Gurulogic Microsystems Oy. The company representatives have said that they are so focused on the work at hand, that they may not even recognize all the possibilities created technologies could have outside of their original purposes. So the main challenge for the Company is to figure out how to use or sell the technologies in new and innovative ways. As Trott writes in his (9, 2008), companies

may have to pursue innovations that are not demanded by their current customers (9, 2008).

In the book Paul Trott citates Schumpeter (1942) how innovativeness is the engine of economic growth, since new products create more competition than cutting the prices of existing products. The process of innovation is bit more complex and requires multiple steps before the product itself is finished. The process starts with concepting new ideas, which are then converted into tangible new artefacts, also known as *inventions.* In the invention step, science and technology combined with hard work by many different people converts the ideas to products which improve the company performance. In short, the equation is (Trott, 2008)

Innovation = theoretical conception + technical invention + commercial exploitation

Trott also explains how to bring together innovation management and product development with a complete view, rather than from one single perspective. Picture 1 explains how innovations are born. This overview includes economical perspective, business management strategy perspective and organizational behavior, but it also recognizes that the activities of individuals also affect the process of innovation. -- In organizations, individuals define problems, have ideas and perform creative linkages that lead to inventions. They are also individuals who decide what activities should be undertaken and how the used resources should be divided. (Trott, 2008.)

Trott writes that if a company wants to design quality products and services, it is necessary to understand what the customer expectations (picture 2) are.

Picture 2 Conceptual framework of Innovation (Trott, 2008).

Table 1 shows the factors of successful products which are sold around the world. The key in new product development is the information that indicates what people want, what features of the product are considered absolutely essential, what price are they

willing to pay for it, what features are desirable but can be sacrificed for a lower price, current and potential competitors, and likely changes in the market size (Mital *et al.*, 2008).

Common factors of the best products	
Provide excellent value for the money spent	Have excellent quality in comparison to their competitor as perceived by customers
Meet customers' needs more fully than competing products and have unique features	Have highly visible useful benefits

Table 1 Four common factors of the products that survive in the markets. (Mital *et al.,* 2008)

What is missing from the table is that people tend to be loyal to the same brand, such as Apple or Samsung. This means that even if a competing product is better, people loyal to the brand do not buy the competing product but they rather wait to get what they want. They have formed emotional and physical bonds with the brand, and feel that they get something more at a personal level when buying their products. To achieve brand loyalty, companies have to be both innovative and offer high quality to customers every time they make a purchase. (Brand Loyalty Definition and Examples, 2019.)

2.2 Business plan

A good business plan helps you realize your dreams.

Rhonda Abrams, The Successful Business Plan

Bruce R. Barringer and Duane R. Ireland explain business plan as a 25 – 35 pages long written narrative that describes what our business intends to accomplish and how it should happen. For the writer, the plan is a road map which helps to execute strategies and plans. For the “outside world”, the plan introduces our goal and it could

draw in some potential investors, which makes it important to write a plan that has enough interesting facts to gain attention.

So the two main reasons for business plan are:

1. It forces founders to systematically think through every aspect of their business and develop a concrete blueprint to follow.
2. It creates a selling document for the company and provides a mechanism for a young company to present itself to potential investors.

Barringer and Ireland point out in their book that “very few, if any, investors will free up time to “listen” to your idea for a new business, at least initially.” Business plan gives the person something to react and shows the reader that the one who has written a plan is dedicated to his/hers idea and wants to see it to become reality.

Content of a business plan

Barringer and Ireland have divided their ideal business plan into 11 different chapters and into 53 headings (page 212 and forward). This research has 12 headings and there is not yet a need to go that deep into the business plan.

Another renowned author and businesswoman who has written about business plan and the meaningfulness of it is Rhonda Abrams. In her book “The Successful Business Plan – Secrets and Strategies (4th edition, 2003) she says that a good business plan enables the entrepreneur to:

- Make the crucial business decision that focus on your activities and maximizes your resources
- Understand the financial aspect of your business, including cash flow and break-even requirements
- Gather crucial industry and marketing information
- Anticipate and avoid obstacles your business is likely to encounter
- Set specific goals and measurements to assess progress over time
- Expand in new and increasingly profitable directions
- Be more persuasive to funding sources. (Abrams, 2003, xxxiv.)

A well written plan with facts and honest evaluations allows to understand if the journey worth it are there possible death traps and most importantly, is the entrepreneur completely in with his own time and money. Barringer & Ireland have listed potential “red flags” (table 3) which could either mean that the entrepreneur is too hyped over his idea or that he is not completely in it – at least financially.

Red Flag	Explanation
Founders with none of their own money at risk	Why should anyone risk their money if the founders are not willing to do it?
A poorly cited plan	A plan should be built on hard evidence and reasearch, not on guess work.
Defining the market size too broadly	Defining the market too broadly shows that target has not been clearly identified.
Overly aggressive financials	Many investors skip directly to this portion of the plan. Unrealistic optimism loses credibility.
Sloppiness in any area	Sloppines in the writing shows inattention to details and could hurt one's credibility.

Table 2 Red Flags in Business Plan (Barringer & Ireland, 2016)

Any or multiple of these in one plan should raise questions and alarm the reader. If the writer believes in what he/she is doing, the more professional the plan should look for possible investors and customers.

2.3 Chapter summary

People want to have experiences and be surprised with new innovations, that is why innovativeness is the key of economical growth and it requires a lot of idea generating, trying and failing before a good product can be introduced to the customers. Product development is a field where companies have to make decisions based on previous feedback and with a little bit of guess work. If we look at smart phones, minor updates are no longer enough for people to buy the new product. Manufacturers are now competing with cameras and longer lasting batteries; another one race is to find out who builds the first cheap folding smartphone.

With the business plan as a base, we can go through the product development with systematical approach and honestly evaluate would the business in mind be profitable.

Background work is the most important part of this project in order for it to be successful, which is why the interviews (chapter 3) and competitor analysis (chapter 4) are done with care. Those are also the two cornerstones which the Company representatives wanted to highlight in the beginning as they would show if there is a need for the Company's technologies and would there be a market for them.

3 RESEARCH QUESTIONS

3.1 Content of the chapter

In the beginning of this project, the idea was to plan the product based on interviews. By interviewing different interest groups, we could analyze the actual need and determine should the productization be pursued. It would not benefit to create something without seeking through potential customers and asking their opinions. With interviews, we could also draw some attention towards Gurulogic Microsystems Oy.

The interviews were conducted by e-mail, phone and face-to-face meetings. The suitable segments for the technology in question were determined to be B2C (Business-to-Customers), end-users and enterprise customers. In other words, the interviews were targeted to users and vendors, and questions were adjusted accordingly. Questions raised in the interviews can be found in the Appendix section.

This chapter contains nine interviews with B2C-businesses and potential customers. The interviews are presented next, and subchapters 3.3 and 3.4 focus on what are the optimal ways of productization and commercialization.

3.2 Interviews

3.2.1 B2C

For the vendors selling solutions to end-users, the questions were from the general point of view and how their customers act. B2C were from Power, DNA, Telia and Elisa, and the following questions were asked:

1. Do customers ever ask about screen sharing?
2. Do you sell this kind of technology?
3. Do you think there is a need for this kind of technology?
4. What would you want to have from this kind of a product?

All four vendors had similar answers. The customers ask about screen sharing, usually older people who wish to watch, for example, Yle Areena from a TV screen.

Chromecast and AppleTV were the only sold technologies, and the feedback was that customers want to watch Netflix or other streaming applications through their phone.

For leisure time, screen sharing is at the moment focused on movies, music and TV shows. It is difficult to use screen sharing for playing since one has to watch the small screen to give necessary commands. For professional purposes screen sharing was seen a little more useful or that it eases the need for different cables in work places.

For the system architecture, the vendors gave their opinion about what is a good product.

- Easy to use, clear instructions
- Can be wireless or attachable if it is easy to use and small
- Absolutely no time delay when using
- Connects with all devices

One of the interviewees noted that during his time, all professional sales people have had the optimal equipment when they give their presentations so that they can begin right away. He also noted that if there would be a technology to allow this screen sharing without the use of Wi-Fi, it would be a technological breakthrough everyone would be interested in.

3.2.2 End-users

Target customers are the ones who often use presentations, such as professional sales people, trainers or schools. In this chapter, five possible end users were interviewed by phone, email and face to face. Some of the interviewees requested to remain anonymous, and only their background is described shortly.

Trainer

In 2018, there was a post in LinkedIn where this problem was commented and hoped to be solved. I was able to locate the person behind the post him and promised anonymously answer to the questions

This interviewee was a former trainer who gave at least one work shop per day, sometimes multiple and in different settings. He had few different cables with him, but the problem was that computers are different and there was always some head missing. On a good day(s) there were no problems; sometimes they had to fight 20 minutes to have a picture. He had heard of some presenting tools, such as QuickShare, but he did not want to use it since it had to be downloaded and with professional computers, firewalls could prevent the download. His problem was often that when different groups had to show their achievement, the change from one laptop to another took too much time and effort.

When asked would he be interested of a solution like this considering his old job, he said that this could have helped a lot. The requirement for him would be that the solution has to be safe, wireless if possible, fast, reliable and to him, cost less than €50.

Architecht

The interviewed architect has drawn for example several of Finnkino's theaters and some shopping malls. She told that if they are at their own office, they connect the computer to the screen with a cable. At the meetings with clients, they use what is provided if the meeting is at the clients' office. Sometimes there are no cables to use, and the options are to show the sketches through tablet (if there are only few people present) or by handing out papers with the drawings.

She said that her company could be interested over this product as they want to test new technologies and possibly implement them in their buildings. She thought that her employer would pay up to €500, but the cheaper the product the better. When asked what features she would think would be good, she thought through her own work and said that if it would be possible to take it with her when going to a meeting with a client it would be excellent, since it would help in those places which lack cables. She said that it would also be interesting to be able to connect the possible Solution to VR-glasses and show the sketches through them to clients.

3.2.3 Corporate customers

UPM

UPM is a Finnish company which works in a forest-based bio industry. It has production in 12 countries, some 19´000 employees and over € 10.5 billion in sales. (upm.com.) This interview was requested through UPMs Contact Us-form, and few days later their Digital Development Manager answered.

Normally there are 1 to 6 negotiations per day where something is shown through a bigger screen. They have miniUSB, VGA and HDMI in negotiations rooms and they are usually enough, only about 5-10 % of years negotiations have some problems. The problems they face are that Mac-computers sometimes do not connect and that cables are defected.

In some of the rooms they already have wireless connection technology, it works well but it could always be more user friendly. From managerial point of view, the solutions should be easy to use, have a fast connection and it has to work when using Skype or other virtual-meeting platforms. Counter question was that how this solution would work without Wi-Fi and would there have to be a plan B with a cable in case there are problems.

Turku University of Applied Sciences

From TUAS, the interviewed person was Mr. Toni Maittila who works as an IT-designer. He told that every week and sometimes every day there are notes that the cables are twisted or broken. This is a problem with newer cables, such as Hdmi, which have tendency to break the small plastic parts. Older ones, such as VGA do not break as often as the newer parts.

When asked about usefulness of wireless connection, he said that it would ease things. He also mentioned that TUAS had tested some sort of a wireless technology, but it did not work as well as it was hoped. Mr. Maittila also said that since the campus of Sepänkatu is old and the rooms have older technology, it also affects how the computers work. The final comment was that this Solution would be interesting to test at the new campus built at the moment.

DNA B2B salesman

A B2B salesman from DNA answered with an e-mail. He visits customers about three times a week and uses his own laptop almost every day in small negotiation rooms.

He uses HDMI-cable when giving presentations if the customers have required interfaces on their equipment. The problems he has faced are that the customer has a good solution which usually does not work properly with a third party computer or that he would have had to put a usb-stick to his computer and install a software to use wireless presentation systems.

The salesman wrote that he is more than happy with the current HDMI-cable and uses it as long as the interface has an HDMI input. He did not like the idea that he would have to download an application to his own computer or to use some application which is located on the Internet, since the cable to him most reliable solution at the moment.

Summary of interviews

Total of four vendors and five possible clients were interviewed. In total there were 12 different requests of interviews and nine of them were conducted. Clients were from different fields of professions and thus provided thoughts from different points of view. The vendors considered more B2C than B2B, but gave good thoughts about what the Solution should include to raise interest and be useful for clients.

All the interviewed persons had experienced problems when trying to present something or waiting to see a presentation. Some of the companies have latest presenting technologies, but most still rely on cables since they are the most common and often the best way to show one's screen and its content. They were all interested in the idea, and what they would like to have from the Solution were the following:

- Secure and reliable connection
- Easy to use
- No time delays
- Mobility
- Wireless

All these properties are possible to implement with the Company's proprietary technologies. However, the product development and testing have to be done with care so that the price for the customers does not go too high.

The chapter included interviews of B2C vendors and their thoughts about the current screen sharing solutions, and secondly there were the interviews with the possible clients. The interviews provided valuable thoughts and gave base for the Solutions architecture which is described in the coming chapters. The interviews showed that there is a need and interest for new technologies.

It was interesting and encouraging to note that no matter where the interviewees worked, in smaller or bigger businesses, they all had faced problems over something which should have been solved years ago. There are some existing solutions on the markets, but at least they have not yet found their way to Finland or they do not work properly.

3.3 Optimal way of productization

As the response to the first research question of this thesis, namely

1. Is there a need for new presentation technology

   Was positive, it is now explored the subsequent questions as follows:

2. What are the optimal ways of
   - productization
   - Commercialization?

Pros and cons of three alternative products will next be evaluated. First product is an HDMI-stick, second is a "jar" and third is a software application. Based on the interviews, people do not mind what type the product would be, as long as it would be easy to use and reliable.

HDMI-stick

HDMI-stick would be the most reliable way to handle possibly sensitive information as it cannot be hacked if it is plugged to the TV-screen. Once in the screen, there would be

no need to touch it again, but it would still be possible to easily take the stick off and move to a different room. The stick would act as hotspot where people connect their device through Wi-Fi-network, and once connected it mirrors the devices' screen.

A "jar"

"Jar" means a small device on the table which would be attached with a cable to the presentation screen. The jar wouldn´t differ from the stick much, but it would be on the plain sight and the size would be considerably bigger. If the decision is to pursue towards a jar, the design of it has to be thought well.

However, a challenge from previous experiences the Company has faced, it might be difficult to find a proper base of hardware where to build the product itself.

App

Phones are full of applications and more are developed each day, so what would one more mean? From all the three, application which one should download to the device is the least wanted product. Based on the interviews, the interest to download anything into work computers or phones is minimal. Firewalls may prevent the download, and no matter how well we market that there would be no risks, there are still doubts to use external application on sensitive information. An application would also need more updating and probably some cloud environment where to send the data so that it could be showed on the presentation screen.

3.4 Options of commercialization

The three original options to commercialize the technology were to sell the idea and technology, license the productization or manufacture the product by ourselves.

Make or buy decision

A make-or-buy decision is made by a company about whether it is better to make a product or provide a service itself, or to pay another company to make the product or do the work (Cambridge Dictionary).

Forming a new company would be the most expensive and time consuming way to do the manufacturing. All manufacturing equipment, space and operating crew would have to be bought and trained, and after that the material sourcing and supply chain management needs to be established. Since there is not yet an actual product or products, a factory for only one product would be expensive and risky move, considering the point where the business starts to bring money in.

The alternative way to manufacture products by using a contractor is a proposable option. Using a contractor with existing facilities and tools is (in the beginning) more cost efficient than establishing one's own factory and investing to manufacturing equipment. Though it would require product development, the Company could test without significant risk how the product would then sell, and consider whether to pursue own plant or not.

In both options, the Company would still have to find the best equipment to do the manufacturing and do the product development. From these two options, manufacturing by using a contractor would be the one to pursue. It requires time to find the best contractor, but it would cost significantly less than putting up a new factory and Gurulogic could sell the product by itself.

The greatest challenge with both options would be to find the optimal production volume and the capacity needed to answer demand. Depending on the targeted customers, smaller production volumes could mean more personal services for the customers. By satisfying limited amount of customers first, it would be easier to aim higher and go abroad.

Technology licensing

A licensing agreement is a written contract by which a property owner permits another party to use that property, under a specific set of parameters. (Licensing Agreement, A. Bloomenthal, 2019.)

By licensing the technology, Gurulogic could provide a license to multiple parties in case there is an interest. There are several options for parallel licensing, which are for example the following:

- Licensing in different countries
- Licensing in different continents
- Royalties based on how many products are sold
- Royalties based on percentage of earnings
- The time period parties are allotted to use the property

When entering a licensing agreement, both parties should consult an attorney in order to understand the intellectual property law. (Bloomenthal, 2019.)

Licensing agreements are widely used for commercialization of technologies, and would be one ideal way for the Company to profit with the created technologies. The challenge is to identify which technologies would be interesting for other companies to exploit.

Selling the idea and technology

From the three, this would be the easiest way. There would be no need to spend money on product development, testing or marketing – the buyer would have to think about those. The difficulty would be how to decide a price over something that is only an idea, without a mature product. For the Company this would be the easiest option to make the best profit at once, but for the buyer it would be a business decision to make.

3.5 Summary

The interviews provided valuable data from different sizes of Finnish businesses and how they manage presentations at work. Though the amount of interviews was low, the

variety of companies showed that no matter the size or revenue, all have had problems with presenting tools. All were slightly interested over a new innovation, which was encouraging for the further research questions.

The conclusion is that productization should be done in either as a HDMI-stick or as a “jar”. Both would act in a similar way, the only difference would be that other one could be portable and the other is on the plain sight on the table. Challenges in both of the options are to find the suitable hardware where to build the product.

Regarding commercialization, the best option would be to either try to find a contractor who could manufacture the product or to license the patent. The challenges in contractor option are to find the suitable manufacturer and product development, in licensing they are to make the terms of the agreement favorable to both sides and also to find a suitable partner(s).

It is for the Company to decide how they want to pursue new markets and products. If they find more ideas to test and productize, then an own or maybe joint-owned factory/test site should be considered. This kind of an environment where to test and try ideas boosts innovativeness and could provide what the Company seeks: ideas on how to use the patented technologies in new ways.

The next step is to study the markets, are there markets for this kind of products and find out the existing screen sharing solutions and to whom are they targeted, B2C or corporate consumers.

4 MARKETS

4.1 Market opportunity

> “Innovation means a new solution which brings added value to target groups and stakeholders related to the innovation.” (Malinen & Barsk, 2004)

The target markets are businesses and schools, since there are literally millions of them combined around the world, and most of them have screens or projectors in their facilities. By offering one working solution for them instead of buying different cables, we could make a good business. In order to do so, the product has to be designed and produced well, so it can be said that our solution is better than others and worth of buying.

The challenge is to make a marketing campaign that would reach all the possible customers and convince them that this is what you want to have instead of other solutions. Another challenge would be that everything should happen relatively quickly from planning and testing to production and marketing, since there are notable competitors on the market already, as described in the Competitors section. As there are multiple different brands in smart phones with little differences, why couldn´t there be few different screen sharing solutions with minor adjustments compared to each other?

4.2 Competitors

There are several competitors on the markets but they are mostly focused on consumer sector. However, there are two products on the markets that have similar idea compared to our Solution.

Chromecast

Chromecast was invented in 2013 by Majd Bakar who worked for Google, and by 2017, Google had sold over 55 million Chromecast´s to consumers.

Chromecast is a small device (picture 3) which is plugged into TV´s HDMI-port. It requires Wi-Fi connection to work and is compatible with mobile devices which use Android, iOS, Windows or Mac OS systems.

Picture 3 Chromecast device by Google. (Google Store)

Chromecast allows the user to mirror the content of a mobile device to TV by using Wi-Fi and Chrome-browser. (Google Store, Chromecast.)

Apple TV

The first Apple TVs were sold in 2007, and up to date Apple has released five versions of it. It is similar to Chromecast but supports Apple´s products, iOS devices and Mac. To work, Apple TV requires HDMI-cable, high-definition TV and Wi-Fi –connection. Picture 4 explains how Apple TV works.

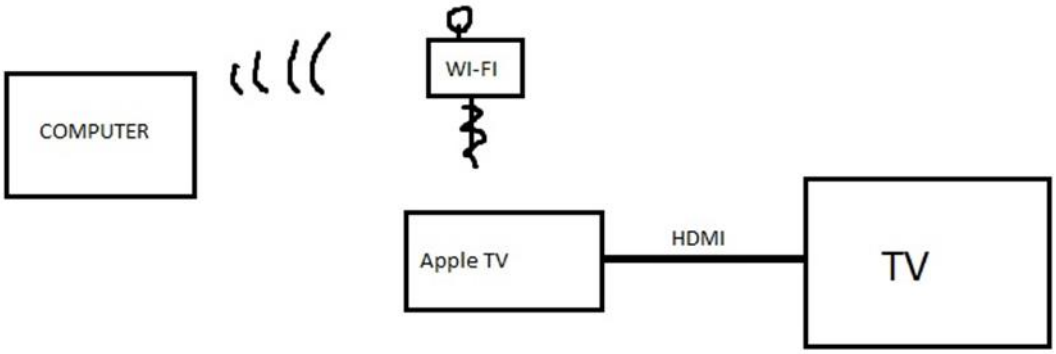

Picture 4 How Apple TV connects with TV (Tuomas Kärkkäinen, 14.2.2019)

Like Chromecast, Apple TV is mostly marketed as a device which allows to use mobile devices as remote controls when watching series and movies, or when listening to music.

Miracast™

Miracast™ was introduced in 2012 by WiFi Alliance. It "Enables seamless display of multimedia content between Miracast® devices." (WiFi Alliance, Miracast.) Compared to Chromecast and Apple, Miracast does not need HDMI-cable, or in some cases, WiFi-connection to work. To work properly, Miracast does however need devices which are Wi-Fi CERTIFIED.

Miracast works like Bluetooth: two devices connect and are authenticated with a code; they pair and remember each other later on. Compared to Chromecast which mainly acts as a remote control, Miracast communicates in real time and it could require a lot of energy when showing content (Hifimaailma, 7/2014).

Cables

The most common cables are VGA, HDMI, (mini)USB and DVI (picture 5). Connection with a cable can be described as reliable, but the problems relate to the cables themselves. As they are used more and less, plugged on and off, the cables and

plastic parts take damage. This can affect on how the head goes into its port and how the picture is shown.

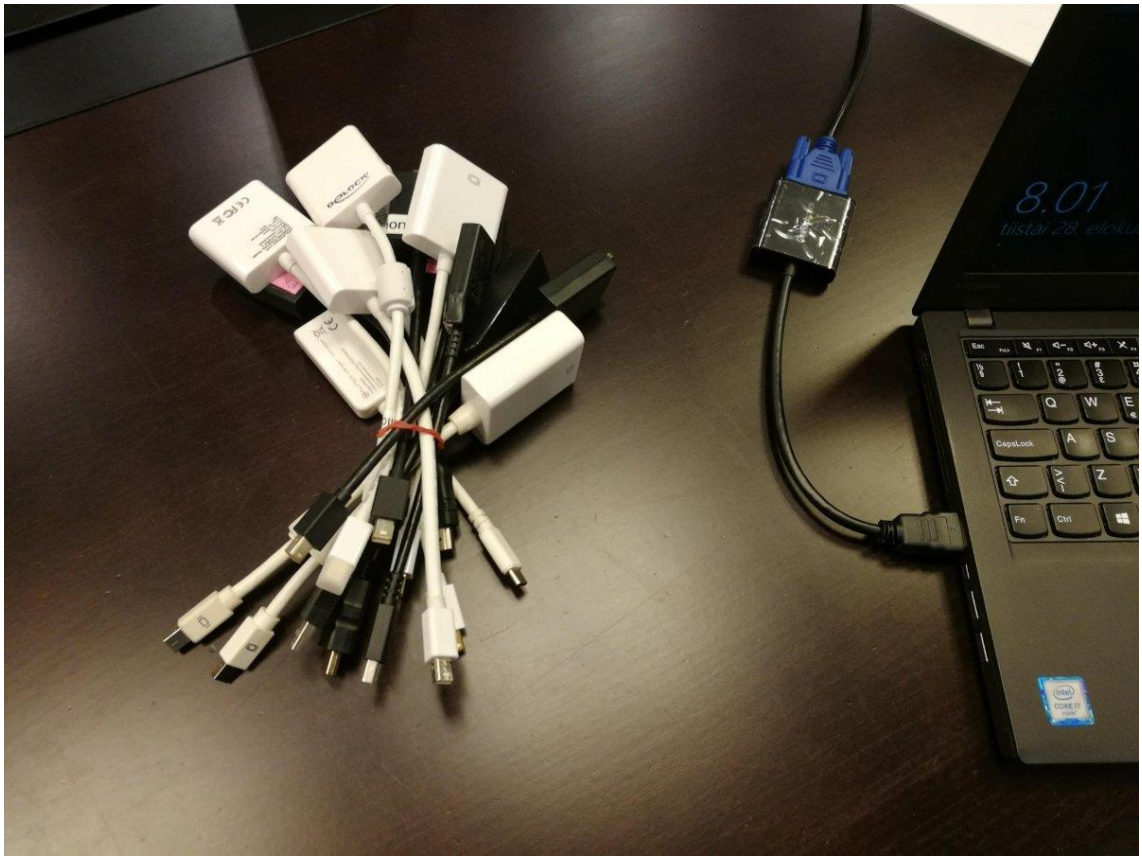

Picture 5 Different options of computer plugs in office environment (Jussi Peltola, 2018.)

ClickShare

ClickShare is a product created by Barco and it requires an USB-port from the computer and a wireless network. ClickShare is connected to a computer, and by pressing the button (picture 6) it mirrors the content of the computer to a screen. What is good with Barco´s product is that it is compatible with all devices from Android to iOS. ClickShare is quite expensive compared to others, as the prices range between 750 € - 3950 €, but with the 4000 € product, up to 8 people can share their screens simultaneously. (Barco, ClickShare, 5.3.2019.)

Picture 6 ClickShare (verkkokauppa.com, 5.3.2019)

Airtame 2

Product created by Airtame (picture 7), and by far the most impressive solution there is for screen sharing. Airtame is an HDMI-stick which uses an Airtime app in screen sharing. User downloads the app to his computer and with WiFi, shares his/her screen to the stick which is connected in the presentation screen. Airtame allows all device to be used, and is secured with a pin-code when one wants to connect to the screen (ZDNet, Airtame, 19.12.2017).

Picture 7 Airtame 2. (airtame.com 15.3.2019).

4.3 Summary

As said in the beginning of the chapter, there are millions of rooms where to use screen sharing technology. If one writes “screen sharing technology” to Google, the suggested links contain mostly applications and none of the physical tools described in this chapter, and these physical tools were the ones we were interested in. At first it seemed that there are few professional tools and they did not have the characteristics we had in mind, which raised the spirits that we could have something no one has yet done.

Then, through another search, Airtame 2 and Barco were found and we will have to think again how to proceed with the project. Airtame is almost the same product we had in mind, so the idea to manufacture almost the same product with minimal changes does not seem smart at this moment. One option is to offer to either Barco or Airtame the technology with a license, but this is up to the Company how to proceed.

Competitive advantage could be pricing and how the image is fitted to the screen. Airtame requires an app to be downloaded on ones´ computer and ClickShare requires cable connection to share the image on screen. Airtame costs some 300€ and ClickShare varies between 750 – 3950 €.

If it could be possible to make the product without an app and drop the price to around 150 – 200 €, there would be potential. The biggest disadvantage is that Airtame and Barco already have their solutions out in the markets and ours is in planning board. I have also made a test with Airtame and asked their help desk about how the problems with different devices and image compressing are taken into account. The answer came quickly and showed that the company has also thought its customer services well.

5 BUSINESS PLAN

5.1

This chapter consists of Heikki Salmela's thoughts about entrepreneurship and the main themes of business plan which could provide value to Gurulogic Microsystems Oy.

Heikki Salmela – self-made entrepreneur

Heikki Salmela is an entrepreneur who opened the first Hesburger in 1980. Today, there are 479 Hesburger restaurants in 9 countries, which 271 in Finland (Hesburger, Ravintolaketju tänään).

Salmela has said that he was "a lost case" in school and that he liked to learn by doing. With an internship at a restaurant he made his way to cook school and his first own restaurant was like a "school of economics and entrepreneurial institute". Today he sits in the boards of some 200 different companies, and is part of the companies Gurulogic Microsystems Oy (co-founder) and Clewer Oy. (YLE, 10.6.2018.) During this project I have had several opportunities to talk with Mr. Salmela and learn more about his ideas and thoughts. What Mr. Salmela has emphasized is that doing and trying give more results for both the employee and employer. It is always an opportunity to find new solutions and ideas for further development. For Hesburger, the most recent challenge is that people, and companies as well, want to be more environmental friendly and they think about what they are eating. Here fore, Hesburger is building a plant-based protein factory in Kaarina. Another plan is to build a fish hatchery based on circulating water system. "Hamburgers are usually associated with meat, but now people want to eat also vegetarian food. We are prepared for this, as it is our job to sell what the customers want. And we do not compromise taste." (Heikki Salmela, 28.3.2019.)

According to Salmela, a good entrepreneur is willing to try and fail when searching for the best products to sell.

5.2 Defining markets

Segmentation directs limited resources to those customers which allow us to achieve our targets (Sitra).

We want to have our share in the enterprise customers markets concerning screen sharing and technologies which would ease working. In picture 8, this process is explained in the easiest way.

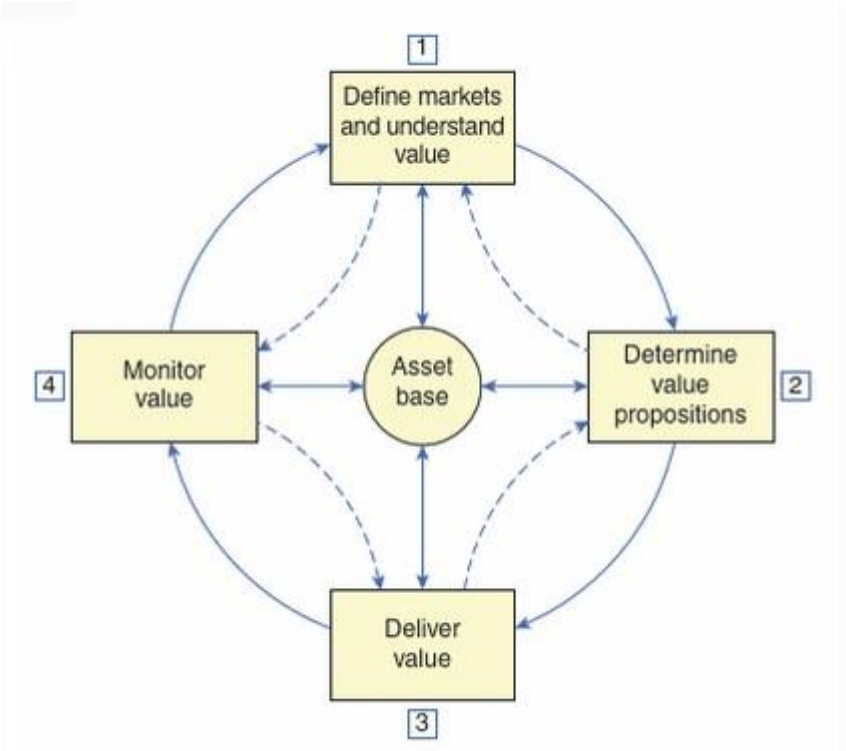

Picture 8 The marketing domain. (McDonald, 2012)

Based on answers gathered from interviews, our target markets are the companies and end-users. In B2C, the existing technologies are sufficient, since screen sharing is mostly used when watching movies, TV-series or when listening to music. Gaming and writing with phones is, with the current touch-screens, almost impossible if one does not look at the screen all the time.

If we compare companies and consumers as buyers, companies can use more money on products which do ease the everyday work - this gives more freedom on product development and pricing.

5.3 Team, product and service

Ideally the team would consist of 1 to 3 person(s) who would work in productization and innovate how to use existing technologies when suggesting new products. The team should also include a person who understands manufacturing, one who knows about marketing and one with sales skills. As this product is planned first for the B2B – markets, marketing and sales has to be done in a different way. For example, the companies which were interviewed could be used as references in marketing.

There are no products to sell, only an idea of what could be an interesting product for companies. The project aims to find out the new ways to use technologies created by the Company and to make a showcase for the Company. Gurulogic Microsystems Oy has over 100 technological patents at the moment, and it requires outside-of-the-box thinking and listening of the customers as well as the markets about what products people and companies are looking for.

In a new business, the most important factor is customer service, and the best case scenario would be that the services provided by the possible new company could be described as agile and customer friendly. As said previously, Gurulogic has already different technologies, which means that it would require (in best case) only minor adjustments to create sellable products. The possible new company should be small without excess multilayered decision making in order to do adjustments to products easily and in a way that customers would feel natural to contact it. Before making a business model, it requires thinking about what would be the line the new company wants to follow: customized products or same for all? Customization requires more money and programmers and may not be what a new company should think first.

5.4 Buyer behavior

In this case we will have to think how businesses' behave when they decide whether to buy the product or not. In 2015, Allen Stafford wrote a short explanation about Business Buyer Behavior. He pointed that when comparing to customers buying behavior, businesses make business with less emotions: for example, they consider the total of cost of selecting supplier and not solely on the product price. Businesses evaluate the manufacturers' reputation, how the customer service is handled, what

potential certificates they have, such as ISO 9000, and how reliable the sold products are so that potential downtimes are minimized. Stafford also pointed that even though there are purchasing managers who make the final decisions, there are multiple influencers who can give their opinion about what to buy, and they are:

- Users; in our case, the ones who give presentations
- Influencers; such as engineers and R&D
- Buyers; purchasing agents
- Decision Makers; the people who decide from whom to buy
- Gatekeepers; they may have information about the sellers and may direct that to the purchasers or simply ignore it. (Allen Stafford, 2015.)

If we are to gain interest for our possible solution, we would have to contact more than those five companies interviewed and make them understand the problem they may not yet have and show that our product would provide them value in the long run. We may have raised interest with those five companies, but as the interviewed group was so small, we do not know what companies outside of those five currently use in screen sharing and presentations. That is why the understanding of buyer behavior is so critical, which also leads to the importance of marketing for the companies and schools.

When interviewing possible customers, the price they would be willing to pay ranged from €50 to €500, and it could be even higher if the product would solve all the problems related to screen sharing. Depending on how much time and money would be spent on product development, testing and marketing (around the world), the break-even point could rise a bit too high since there are no other products thought to support the sales.

5.5 System architecture

Discussions with Mr. Tuomas Kärkkäinen on February 14th focused on how the solution should be built. According to Kärkkäinen, Gurulogic could utilize existing technologies enhanced with Gurulogis´s own technologies. The most important thing what Kärkkäinen said was that the solution has to be in a form where there is no need to download anything to one´s computer because of possible hacking and firewalls which could prevent downloads.

In short:

- Only working option is to use Wi-Fi
- It has to have HDMI output, this prevents hacking
- Implement WebRTC screen sharing solution
- Make the solution in a stick mode

From idea to a working solution, Mr. Kärkkäinen said that the best option is to make our product into a HDMI-stick. This stick is then attached to an existing screen and it can remain there, there is no need to remove it once it is in meeting room.

The HDMI- stick would work as a hotspot, and anyone is able to connect that stick once they know the access code. Mr. Kärkkäinen explained that the hotspot would act similarly as when one connects to free WiFi in a ship or airport: It opens up a new browser where user accepts to share his screen and it would pop into the TV-screen. Screen sharing would be done with WebRTC technology, and utilizing Gurulogic's patented technology, discussed here, the screen image is automatically transferred into a desired format. Comparing to existing technologies, Gurulogic's patent of how to convert image into a right format regardless of the source provides a feature no other company has at this moment.

5.6 Chapter summary

Entrepreneurship is a field where one has to stay alert all the time: how the markets change, what the customers want, what the competitors are doing, how we can be better than them. This chapter shortly explained entrepreneurship and gave insight to those parts of business plan that we thought would be useful in this project. The interviews gave the best picture over whether there is an interest for this solution, and the buyer behavior analysis is a continuation to that.

As the companies are targeted as desired customers, the way of making decisions differs from normal consumers. Companies can use more money, but they want to have quality and service in return. Though some companies could be willing to pay up to €500, the fact is that lower price attracts more customers and gives better profits in the long run.

6 CONCLUSIONS

In the end of this project, in April 2019, Gurulogic Microsystems Oy was approached by European Patent Office (EPO). They were contacted as a part of a survey regarding patent commercialization by small and medium sized enterprises having patented their inventions at EPO. The purpose of the survey was to better understand the process SMEs as to how they best commercialize and exploit their patents. Surprisingly, the patent application that was randomly selected for this project was the one that I have been exploring for this project of mine, so EPO received rather good – and perhaps exceptional - material for their survey, as in response by Gurulogic Microsystems Oy it was stated that they had ordered a business plan from a student for exploring the possibilities of commercialization, It is probably not too often when this happens, but it did now.

We can say that there is a rising demand for solutions which ease up our everyday life. As we want to move to paperless offices, we also want to get rid of all extra cords and problems from finding the right channel to converting the image when connecting the presentation screens.

In the beginning this project, there was a doubt whether this idea would ever get meat around its bones, Mr. Salmela first wanted to test how students from Turku University of Applied Sciences would handle the work and innovate new products. During the initiation, we found an idea which would benefit multiple organizations, and thus agreed to try and see how far the idea would carry us. The first problem was to understand what are we actually trying to solve and build, and how to write about it. To figure out the theme of the thesis was second problem, and unison between product development and business plan seemed to be the best way to proceed.

At first, the screening of competitors went well. The sold screen sharing solutions were marketed to entertainment and professional tools did not seem to challenge our idea. Luckily and by accident, two good competing products appeared at the same day and we had to think again what to do. When I told the Company about Airtame 2 and Barco, they suggested to keep up the good work, think what would be the competing edge our

product could have compared to those two and to figure out new possibilities in commercialization.

How to move forward

The first research question was that would there be a need for a technologies created by Gurulogic Microsystems Oy. The second was to think what would the optimal way of productization: an HDMI-stick, an application or a “jar”, and which one of the three options would be the best to way commercialize the technology: licensing, selling or making the product by ourselves.

Interviews indicated that there is a need for new technological solutions that companies may have not even thought before. They may have heard them, but have not proceeded to buy those technologies, as one comment was that the wireless connection did not work as planned. Based on interviews, which gave green light, it was logical to focus on the second question which was “optimal way of productization and how to commercialize it.”

At first, there were three options in how to do the productization. From those, the HDMI-stick is the hardware to prefer. It would be hacking-proof, requires minimal designing and once connected to the screen there would be no need to touch it again which would minimize the risk of breaking the parts, but at the same time it is possible to take it with when going for example to another company.

Part B of the second question was how to commercialize the product. Three options were to sell the idea and technology, license the production or form a new company which would do the manufacturing. After finding out about Airtame and Barco, the commercialization had to be thought again. Product development and testing requires a lot of money and the competitors are developing their own products at the same time, it was clear that it would be waste of money to start from the scratch and build something what already exists, even though Gurulogic Microsystems Oy has created technology which would ease one part of the screen sharing problems. It would be difficult to convince companies buy our product if they have heard about Airtame. Comparing two companies, other with millions of uses and the second one is brand new on markets with no customer experiences; the choice turns to the bigger one no matter what the offer is. However, if the Company tries to productize the idea, the Oulu

region may have suitable companies, and Ms. Lummevuo had few names in mind to potentially seek through.

There is now a fourth option in how to commercialize the existing technology, and that is *to offer the technology to Airtame or Barco.* As Airtame has beautiful design on its product and it has an impressive amount of uses, their FAQ and customer service hint that there might be a need for better image scaling. Depending of the used device, there might be a black bar on the edge of the screen and the user may have to change the image output in order to make the image look good. By offering a technology to solve this problem, both companies could win. For Gurulogic it would mean that the technologies could be used in new ways and products, and for Airtame it would mean even better product to sell and no need to develop technology.

On a short meeting with Mr. Salmela and Mrs. Lummevuo, I explained them about the findings and thoughts they had risen. They agreed that it may not be a good idea to begin the product development from zero since there are already two similar products at the markets.

The two options left are to offer the technology to Airtame and Barco, or to license it.

The licensing option is to find and offer the patent(s) to interested parties. The challenge is how to inform and showcase the patents in the easiest way for potential customers.

When this project begun, Mr. Salmela wanted to see are there any ways to use the created technologies in new ways and products which could be sold. It was difficult to throw ideas without understanding the original patents, but like Mr. Salmela said, “When company begins to study a problem, it opens up new possibilities”. If the Company would like to continue innovative working, suggestion is to collaborate with Turku University of Applied Sciences. TUAS organizes hackathons and Challenge Turku competitions, and Gurulogic Microsystems Oy could give one assignment to one of those events. It would attract both people with IT background as well as those with good imagination, understanding of what is needed in today´s world and the ideas would be from outside of the box.

REFERENCES

40 Chinese Proverbs for Entrepreneurship http://juniorbiz.com/40-chinese-proverbs-for-entrepreneurship Available 27.2.2019

Abrams, Rhonda. The Successful Business Plan – Secrets & Strategies, 2003, 4th edition

Airtame, https://airtame.com/ Available 5.3.2019

Apple, Apple TV Support. https://support.apple.com/apple-tv Available 5.3.2019

Barco, ClickShare. https://www.barco.com/en/clickshare Available 5.3.2019

Barringer, Bruce R. & Ireland, R. Duane. Entrepreneurship – Successfully Launching New Ventures, 2016, Fifth edition

Bloomenthal, Andrew. 2019. Licensing Agreement. https://www.investopedia.com/terms/l/licensing-agreement.asp Available 15.4.2019

Chromecast, https://store.google.com/product/chromecast saatavissa 5.3.2019

Guiding Tech, The Evolution of the Modern Laptop: From 1982 to Present. https://www.guidingtech.com/61156/evolution-modern-laptop/ Available 8.3.2019

Hifimaailma. Kokeilussa Miracast – Näytön peilaus? https://www.hifimaailma.fi/uutinen/kokeilussa-miracast--nayton-peilaus-6.108.13853.df60803aa5 Available 5.3.2019

How to write a great Business Plan https://www.google.com/url?sa=t&rct=j&q=&esrc=s&source=web&cd=7&ved=2ahUKEwiUyfTR5avgAhWBhywKHW0xBxEQFjAGegQICxAC&url=https%3A%2F%2Fwww.uxbridge.ac.uk%2Fimages%2Fpdf%2FHBS%2Fhbs%2520business%2520plan.doc&usg=AOvVaw1vBLC2zMeEpJxdegCP99YV

Maaseudun tulevaisuus, 9.2.2017, Yrittäjyys vetoaa nyt nuoriin – parikymppiset maalaiset kärjessä. https://www.maaseuduntulevaisuus.fi/politiikka/yritt%C3%A4jyys-vetoaa-nyt-nuoriin-parikymppiset-maalaiset-k%C3%A4rjess%C3%A4-1.178189 Available 26.2.2019

Make-or-Buy, https://dictionary.cambridge.org/dictionary/english/make-or-buy Available 12.5.2019

Malinen, P., Barsk, K. Arvonmuodostus innovaatiotoiminnassa: arvottaminen ja optioajattelu. 2004

Marketing Tutor, Brand Loyalty Definition and Examples. 2019. https://www.marketingtutor.net/what-is-brand-loyalty/ Available 12.4.2019

McDonald, Malcolm. Market Segmentation: How to Do It and How to Profit from It. 4th edition, 2012

Mital A., Desai A., Subramanian A., Mital Aashi. Product Development: A Structured Approach to Design and Manufacture. 2008.

ScienceNode, A brief history of the smartphone. https://sciencenode.org/feature/How%20did%20smartphones%20evolve.php Available 8.3.2018

Sitra, Segmentation. https://www.sitra.fi/blogit/segmentoinnilla-asiakkaan-iholle/ Available 12.4.2019.

Stafford, Allen. Business Buyer Behaviour, 2015. https://www.marketingbinder.com/glossary/business-buyer-behavior/ Available 20.3.2019

The Telegraph, Apple TV: The history of Apple´s bid to take over your living room. https://www.telegraph.co.uk/technology/apple/11849521/Apple-TV-The-story-of-Apples-bid-to-take-over-your-living-room.html Available 5.3.2019

Tilastokeskus, Uusien yritysten määrä kasvoi 15 prosenttia heinä-syyskuussa 2018. https://www.stat.fi/til/aly/2018/03/aly_2018_03_2019-01-25_tie_001_fi.html Available 26.2.2018

Trott, Paul. Innovation Management and New Product Development. 4th edition, 2008. https://books.google.fi/books?hl=fi&lr=&id=9hv4GqUq1E0C&oi=fnd&pg=PR17&dq=product+development&ots=uVztD8HRsJ&sig=FRzChdXxrOYVeG_kkUnZhN2Yar4&redir_esc=y#v=onepage&q=product%20development&f=false

UPM https://www.upm.com/about-us/, Available 11.2.2019

WiFi Alliance, Miracast. https://www.wi-fi.org/discover-wi-fi/miracast Available 5.3.2019

WiFi Alliance, Wi-Fi CERTIFIED Miracast™ delivers high-resolution multimedia experience. https://www.wi-fi.org/news-events/newsroom/wi-fi-certified-miracast-delivers-high-resolution-multimedia-experience Saatavissa 5.3.2019

Yle, 10.6.2018. Lillukanvarsia, sanoo Hesburger-mies mehupillien kieltämisestä – Heikki Salmela verottaisi raskaasti kaikkea saastuttavaa. https://yle.fi/uutiset/3-10244630 Available 11.4.2019

ZDNet, Airtame, First Take: Enterprise-class wireless screen mirroring. 19.12.2017 https://www.zdnet.com/product/airtame/ Available 5.3.2019

Saatekirje

Hyvä vastaanottaja,

Teen opinnäytetyötä Turun ammattikorkeakoulussa tuotantotalouden insinööriopintoihin liittyen. Opinnäytetyön tilaaja on Gurulogic Microsystems Oy, joka kehittää teknologiaa muun muassa datan siirtämiseen ja pakkaamiseen liittyen.

Tämän opinnäytetyön tarkoituksena on tutkia soveltuuko Gurulogic Microsystems Oy:n kehittämä teknologia tietokoneen, tabletin tai puhelimen näytön jakamiseen langattomasti esimerkiksi omaan televisioon tai kokoushuoneen seinänäytölle. Haluamme selvittää kiinnostusta aiheeseen sekä sitä, onko työpaikoilla ongelmia esimerkiksi oikeiden piuhojen löytämisessä eri laitteisiin liittyen.

Opinnäytetyö tehdään kyselytutkimuksena, ja kutsun teidän osallistumaan siihen. Kyselyn vastauksia käytetään tuotteen arkkitehtuurin suunnittelussa, joten kaikilla vastauksilla on suurta arvoa.

Sähköpostin ohessa on kyselylomake Word-tiedostona, joten voitte kirjoittaa siihen vastauksenne ja lähettää takaisin tähän sähköpostiosoitteeseen. Vaihtoehtoisesti voin soittaa teille ja kirjata itse vastauksenne noin 5-10 minuuttia kestävän puhelun aikana. Antamanne vastaukset käsitellään nimettömästi eivätkä kenenkään vastaajan tiedot paljastu opinnäytetyössä.

Ystävällisin terveisin,

Kaisa Katajisto

Turun ammattikorkeakoulu

Kyselytutkimus: B2C toimijat

1. Kysyvätkö asiakkaat näytön jakamiseen liittyviä kysymyksiä, kuinka usein?

2. Myyttekö esimerkiksi Chromecastia, Rokua tai Apple TV:ta?

3. Luuletteko että tällaiselle olisi kiinnostusta, tarvetta tai kysyntää jos kaikille alustoille toimiva sovellus olisi olemassa?

4. Mitä ominaisuuksia toivoisitte tällaiselta sovellukselta (tuotearkkitehtuuri)?

Tausta: Selvitän olisiko tarvetta teknologialle/sovellukselle jolla voidaan jakaa puhelimen tai tietokoneen näyttö riippumatta siitä, mikä käyttöjärjestelmä tai valmistaja mobiililaitteella on. Tuotetta mietitään niin yksityisasiakkaan kuin yritysasiakkaan näkökulmasta.

Kyselytutkimus: näytön jakaminen ilman välipiuhoja

1. **Kuinka usein työyhteisössä pidetään esittämistä (esim. Power Point) vaativia kokouksia, tilaisuuksia, palavereja?**

2. **Kuinka nämä esitykset pidetään, omilla koneilla yhdistettynä piuhalla vai ”pääkoneelta”?**

3. **Kuinka usein kohdataan ongelmia esimerkiksi sopivan piuhan löytämisessä tai näytön jakamiseen liittyen?**

4. **Kysyvätkö asiakkaat tällaisista mahdollisuuksista kun he etsivät toimivia ratkaisuja yrityksille**

5. **Olisiko teillä kiinnostusta yksinkertaiseen**
   – Sovellukseen
   – Tikkuun
   - ”Purkkiin” jolla näytön voisi jakaa suoraan omalta koneelta SmartBoardille, näytölle tai pääkoneelle?

6. **Helpottaisiko tällainen sovellus työskentelyä, ja jos helpottaisi, mitä ominaisuuksia haluaisitte siinä olevan?**

7. **Paljonko olisitte valmis maksamaan tällaisesta sovelluksesta?**

Kiitoksia ajastanne!

Kaisa Katajisto,
Turun ammattikorkeakoulu