SEMI-AUTOMATIC ROBOT PIPE WELDING SYSTEM

HAMK
HÄMEEN AMMATTIKORKEAKOULU
HÄME UNIVERSITY OF APPLIED SCIENCES

Bachelor's thesis

Mechanical Engineering and Production Technology

Riihimäki, 2019

Ranoj Maharjan

HAMK
HÄMEEN AMMATTIKORKEAKOULU
HÄME UNIVERSITY OF APPLIED SCIENCES

ABSTRACT

Mechanical Engineering and Production Technology
Riihimäki

Author Ranoj Maharjan **Year** 2019

Subject Semi-Automatic Robot Pipe Welding System

Supervisor(s) Tapio Väisanen

ABSTRACT

The objective of this thesis project was to design a semi-automatic robot pipe welding system. This thesis was commissioned by PrePipe Oy that specializes in industrial piping, tanks, equipment installation and maintenance. This thesis is a continuation of a previous Bachelor's thesis "Semi-Automatic Robot welding for Workshops".

This project was focused on the design of a pipe welding system with the use of a robot in the industrial pipe industry that would mitigate the shortage of skilled welders, reduce labour and material costs, enhance work productivity, and improve weld quality with a higher Return on Investment and a shorter payback period for investments as well as protecting welders from health hazards.

Initially, information was collected from a thesis written by two engineering students on the same topic as well as literature in the field and multiple discussions with the project manager of PrePipe Oy, different companies involved in pipe welding and automation. Multiple solutions were generated and discussed it with the supervisors and the project manager. The general design process: problem definition, gathering of information, brainstorming, analysis and detailed design followed for the completion of the thesis.

This thesis contains the design of a semi-automatic robot welding system, a detailed description of all the components, 3D CAD design pictures, work sequence, cost estimation of individual parts and the system. The system designed here will be built at PrePipe Oy in the future.

Keywords Pipe welding, robot, semi-automatic, weld, welder.

Pages 24 pages including appendices 5 pages

CONTENTS

1 INTRODUCTION 1

2 PIPE WELDING AUTOMATION 2

2.1 Collaborative robot 2
2.2 Semi-automatic robot pipe welding 3

3 PIPE WELDING POSITION 4

3.1 1G pipe welding 5
3.2 Pipe specimen 5

4 DESIGN PROCESS 6

4.1 Problem definition/Customer requirements 7
4.2 Gathering related information 7
4.3 Conceptual design 8
4.3.1 Overhead robot position 9
4.3.2 Floor mounted robot position 9
4.4 Selection and design of system 10

5 DESIGN COMPONENTS 12

5.1 Universal robot 12
5.2 Welding machine with robotic interface 13
5.3 Welding positioner 13
5.4 Pipe support 14
5.5 Support table 15
5.6 Guide rail 16
5.7 7th axis range extender 17

6 WORK SEQUENCE 18

7 COST ESTIMATION 19

8 CONCLUSION AND FUTURE WORK 22

9 REFERENCES 23

Appendices

Appendix 1 Technical specifications of Universal robot
Appendix 2 Technical specifications of welding positioner
Appendix 3 Technical specifications of linear guide
Appendix 4 Technical specifications of aluminium profile
Appendix 5 Technical specifications 7th axis range extender

List of Abbreviations

Cobots	Collaborative robots
DN	Diameter Nominal
GMAG	Gas Metal Arc Welding
GTAW	Gas Tungsten Arc Welding
HMI	Human Machine Interface
kg	Kilogram
m	Metre
mm	Millimetre
ROI	Return on Investment
UR	Universal Robot
1G	1 means flat position, G stands for Groove welding
2G	2 means horizontal position, G stands for Groove welding
3D CAD	Three Dimensional Computer Aided Design
5G	5 means horizontal position that is fixed, G stands for Groove welding
6G	6 means inclined position at an angle of 45°. G stands for Groove welding.

List of Figures

Figure 1 Collaborative robot 1
Figure 2 Types of collaboration..... 3
Figure 3 Pipe welding positions 4
Figure 4 1G Welding 5
Figure 5 Design process 6
Figure 6 Pipe welding with UR 7
Figure 7 Conceptual design 8
Figure 8 Overhead robot position..... 9
Figure 9 Floor mounted robot position..... 9
Figure 10 Design of semi-automatic robot pipe welding system 10
Figure 11 Connection of foot with linear slide..... 11
Figure 12 Connection of pipe support with linear slide 12
Figure 13 Cobot from Universal robot 12
Figure 14 Welding machine 13
Figure 15 Welding positioner..... 14
Figure 16 Pipe Support..... 14
Figure 17 Support table 15

Figure 18 Linear slide 16
Figure 19 Guide rail 16
Figure 20 7TH axis 17

List of Tables

Table 1 Size and weight of DN 125 and DN 150 pipes 5
Table 2 Cost estimation of each components 19

1 INTRODUCTION

Today the pipe welding industry is facing qualified welder shortage crisis which is expected to escalate. Currently, many major companies that are actively involved in the pipe welding industry globally largely depend upon human welders. Highly skilled welders are expensive and a shortage of skilled welders in the pipe welding industry makes labour costs even higher and also results in delaying of the project.

Inconsistent weld quality is also one of the many problems pipe welding industry is experiencing. It is difficult for a human welder to produce a repeatable and high quality weld consistently. As seen in Figure 1 application of cobots will ensure the consistent result in weldment quality as cobots are able to control the weld parameters such as travel speed, weave amplitude, oscillation and torch angle. Implementation of cobots in small scale pipe welding industry is a safe approach to deal with the problems.

Figure 1 Collaborative robot (OH-au2mate, 2019)

This thesis was made for PrePipe Oy, located in Lappeenranta which specializes in welding for industrial pipe and support structures, tanks, equipment installation and maintenance. They provide pipelines, welds and supports for pulp factories in Eastern Finland. Now, they needed to automate a part of their workshop with the use of collaborative robot to weld the pipes. This thesis is focused on the design of pipe welding system with utilization of a collaborative robot in industrial pipe industry that would

mitigate the shortage of a skilled welder, reduce labour and material costs, enhance the work productivity, and improve the weld quality as well as preventing health hazards for welders.

This thesis is a continuation to an earlier Bachelor's thesis "Semi-Automatic Robot Welding for Workshops". Background research on this topic was prepared by students from Saimaa University of Applied Sciences. This previous thesis was focused on modular workstation design, risk analysis, economic analysis, programming and robotic interface and justified the implementation of robotic system in the pipe industry. (Jouttijärvi & Vimal Raj, 2018, p.2)

2 PIPE WELDING AUTOMATION

Automation in the pipe welding industry has potential to overcome the problem that the industry is experiencing and ultimately increase a company's profitability. The costs related with automated welding system must be studied within the context of benefit that automation can provide. It is important to determine the exact need and operations of a company to ensuring a wise investment. While the benefits generated by automation can be significant, those benefits come at a price. Many small-scale industries and those with frequently changing production lines, need to see a payback period of no more than 12-15 months to justify the investment required to install automation. On the other hand, companies that know their production needs will not change for years can often justify a longer payback period. (Summers & Stevens, 2008)

2.1 Collaborative robot

Collaborative robots are designed to perform tasks in collaboration with humans in close proximity. In contrast to traditional industrial robots which are designed to work autonomously in protected environment, the cobots are capable of operating around people without the need for external guarding or safety fences. The cobots are designed with technology that ensure safety when they come close to an operator. These safety features include lightweight materials, rounded edges and sensors that control force and speed. A small to medium sized industries are finding collaborative technology can provide an economically viable entry point to robotic automation. (International Federation of Robotics, 2018)

The International Federation of Robotics defines four types of human- robot collaboration as illustrated in Figure 2.

1. Coexistence: Human and robot work alongside each other but no shared workspace.

2. Sequential collaboration: Human and robot both active in the workspace completing tasks sequentially.

3. Cooperation: Robot and human work on the same part at the same time and both are in motion.

4. Responsive collaboration: The robot responds in real-time to movement of human.

Currently, the most common collaborative robot applications are coexistence and sequential where robot and human share the same workspace, completing tasks independently or sequentially. The pipe welding is one of the many applications where cobots can be used for. As the pipe welding is repetitive tasks, there is potential for robotic automation.

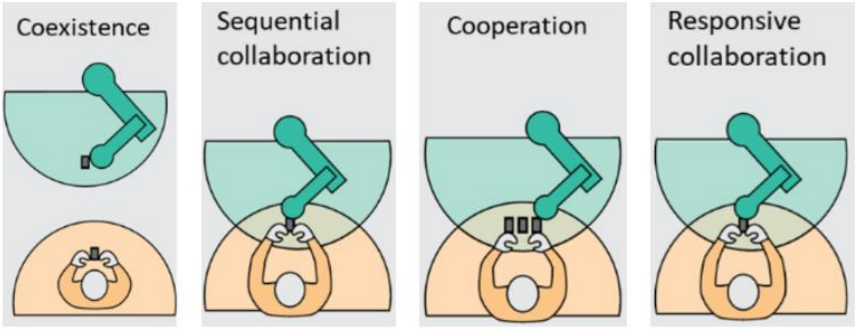

Figure 2 Types of collaboration (International Federation of Robotics, 2018)

2.2 Semi-automatic robot pipe welding

Semi-automatic robot pipe welding is an approach in which the welder controls the welding process, the placement of pipes to be welded onto welding positioner and pipe support whereas robot welds the pipe. Sequential human collaboration with the robot adds another level of quality control because, with welding helmet on and teach pendant in hand, the welder can ensure the weld is tracking the way it is supposed to. If a large gap or some other problem arises during the weld, the welder can alter the weld pattern or the welding parameters to address the inconsistency immediately instead of having to wait until the end of the process and reworking the weldment.

This process also provides flexibility, reliability and consistent result while also offering higher deposition welds and greater fusion. Robotic arms offer unmatched smoothness and reach. Automatic welding eliminates the variation in quality that occur in manual welding, which results in consistent output and better work productivity. Thus, it maintains optimal weldment quality. With semi-automatic welding, there are fewer defects such as distortion minimizing the need for correction. This in turn saves time and materials. (Heinrich, 2009)

3 PIPE WELDING POSITION

The pipe welding position is determined by the pipe position and if the pipe is in a fixed position or rotating. These positions are illustrated in Figure 3. They are known as the horizontal fixed position (5G), the horizontal rolled position (1G), the vertical fixed position (2G) and the pipe inclined fixed position (6G).

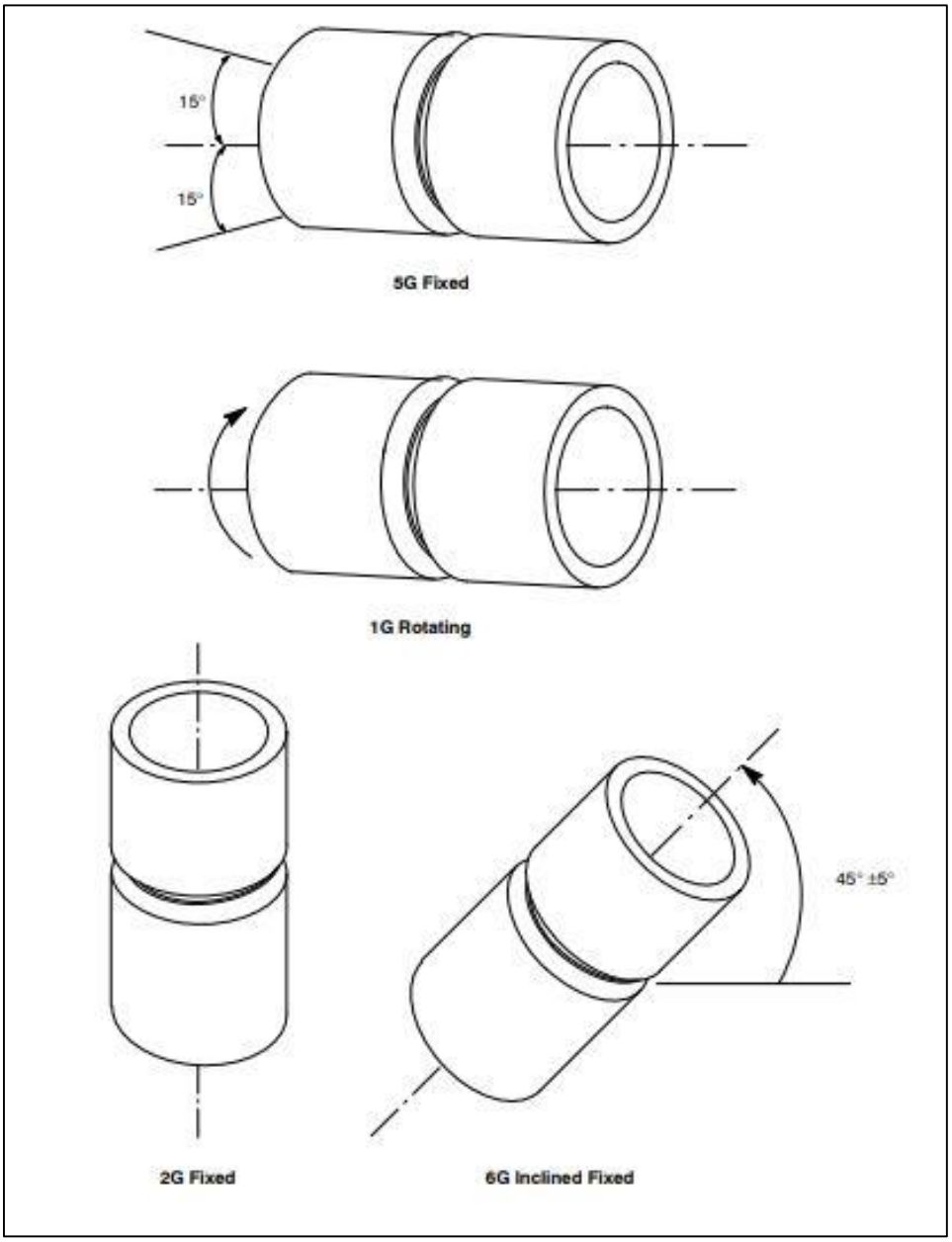

Figure 3 Pipe welding positions (Miller Welds, 2018)

The 1G position is preferred for this semi-automatic pipe welding system.

3.1 1G pipe welding

The 1G position as illustrated in Figure 4 is a horizontal rolled position where a fixed welding torch attached to the robot arm is positioned at the pipe weld joint. In this position, the pipe is rolled so that the welding is done in the flat position with the pipe rotating under the arc. This position is the most advantageous of all the pipe welding positions.

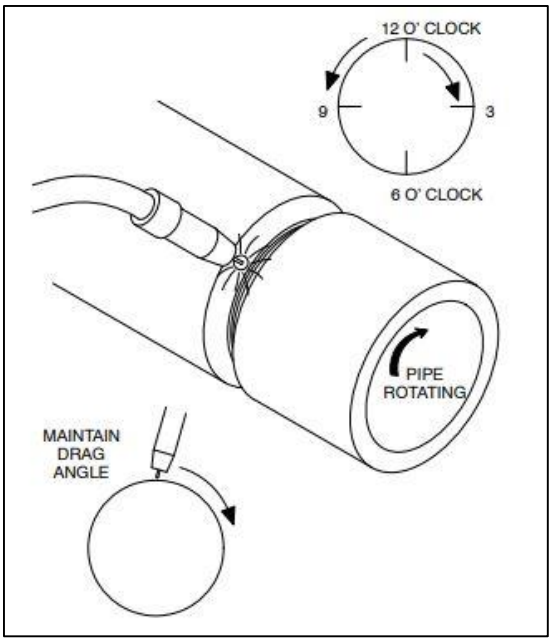

Figure 4 1G Welding (Miller Welds, 2018)

3.2 Pipe specimen

The pipe to be welded is DN150 (ø168.3mm) and DN125 (ø139.7mm). The materials of the pipe are stainless steel and carbon steel. The pipe DN 150 is welded with GMAW process whereas DN 125 is welded with GTAW process. The length of each pipe is 6m long and thickness is 2 – 4 mm that weigh max. 110kg. The specifications are given in Table 1.

Table 1 Size and weight of DN 125 and DN 150 pipes (Onninen, 2019)

S.N.	Diameter (mm) x wall thickness (mm)	Weight kg/m
1	139.7 x 1.6	5.53
2	139.7 x 2	6.90
3	139.7 x 3	10.30
4	168.3 x 2	8.33
5	168.3 x 2.6	10.80
6	168.3 x 3	12.42
7	168.3 x 4	16.50

4 DESIGN PROCESS

The design process as illustrated in Figure 5 was followed in this project. It is the process of inventing a system to meet the desired needs of the customer. It is useful in tackling a complex problem. The five basic steps followed in the design process are:

1. Problem Definition/Customer requirements
2. Gathering related information
3. Conceptual design
4. Analyse and select solution
5. Test and Implementation

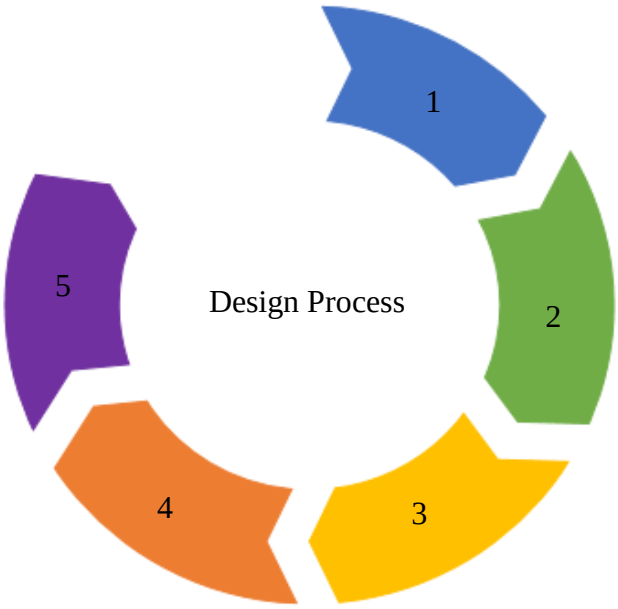

Figure 5 Design process

4.1 Problem definition/Customer requirements

The first step in the design process is to define the problem, clarify the objectives. It usually establishes the details of customer requirements and information about product functions and features. The need of the customer was to develop semi-automatic robot welding system.

The following list includes the preliminary criteria for a better design.

1. The design should be simple, easy to use machine manually, most importantly functional.

2. The design should be transportable, easy to take at production sites.

The reason for the solution is due to a lack of qualified welders as per the company's requirement, which causes delay in the completion of projects and also preventing health hazards for welders.

4.2 Gathering related information

Information related to the problem and solutions are collected before proceeding to next design stage. It was done by consulting with other companies who have solved similar kind of problem. Information was gathered from the previous thesis as well as various online sources, book.

Efforts to reduce the time of pipe installation have resulted in automated pipe welding systems. Companies such as OH-au2mate, Wuxi Machinery Co., Ltd provide semi-automatic welding solutions. The pipe welding station as illustrated in Figure 6 is used for welding pipe to pipe, pipe to flange.

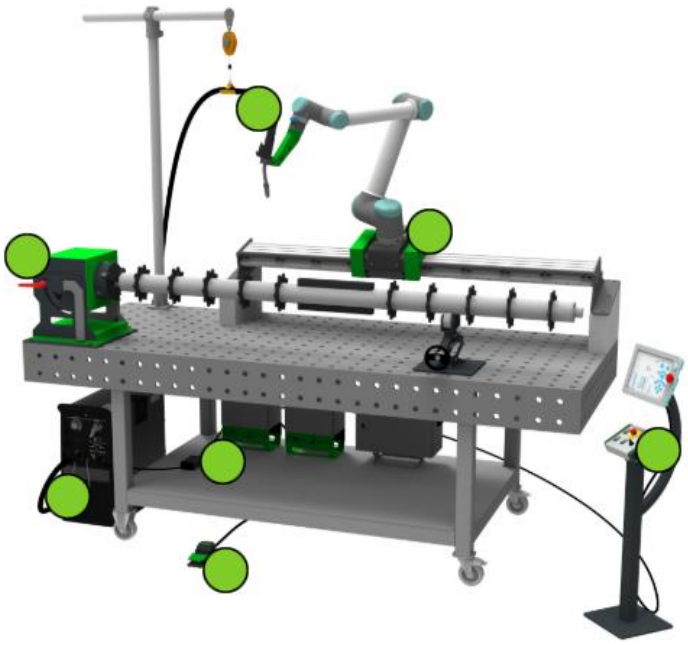

Figure 6 Pipe welding with UR (OH-au2mate, 2019)

4.3 Conceptual design

Establishing design specifications and generating multiple ideas is the next step in the design process. Brainstorming at this stage is important in generating multiple solutions to the problem. Following few design specifications were set.

1. Pipe and elbow must be able to turn, enough space between floor and pipe while positioner rotate pipe.

2. There must be manual guide rail to move the positioners and pipe support with ease linearly along the rail.

3. Welding positioner should have a hole for a pipe to pass through as pipe will be more than 6m long.

4. Welding space should be 2000mm X 2000mm.

Figure 7 illustrates the conceptual design of welding system. Design consists of welding area of 2000mm X 2000mm as mentioned in design specifications. Basic idea is while pipe is being welded with the use of Universal robot at one side, the welder prepares for the welding at the other side.

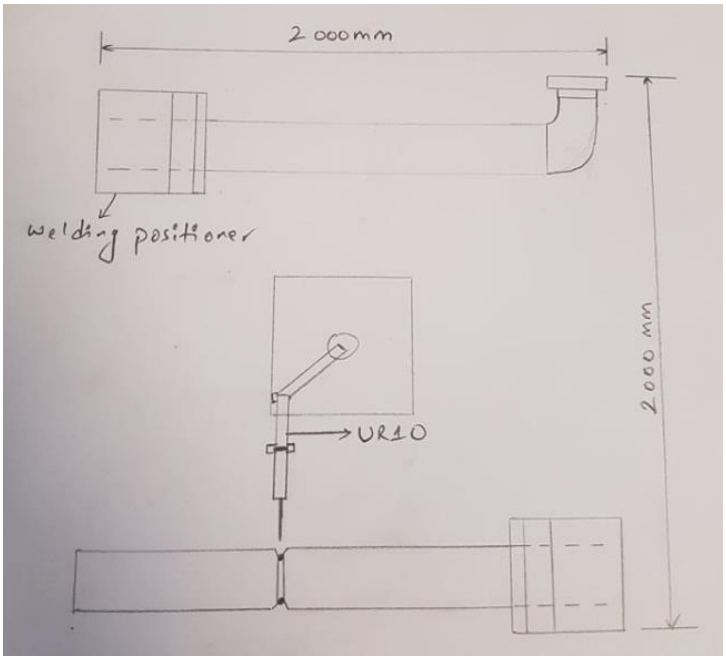

Figure 7 Conceptual design

Based on the conceptual design, two solutions were generated and are discussed in the following.

1. Overhead robot position

2. Normal robot position

4.3.1 Overhead robot position

With the overhead robot position, the robot is overhung on a gantry or mounted to the linear axis on a ceiling and positioned upside down. The robot can travel along the linear axis mounted on the ceiling or a gantry as seen in Figure 8. A belt or rack and pinion system is used to drive the robot linearly. This system is not easily transportable at different production sites.

Figure 8 Overhead robot position (Vention, 2019)

4.3.2 Floor mounted robot position

In the floor mounted robot position, the robot is mounted to the linear axis on a floor as seen in Figure 9. In this system, a belt, ball-screw or rack and pinion system is used to drive the robot linearly. It can be easily transportable to any production sites because of its light weight and compactness.

Figure 9 Floor mounted robot position (Vention, 2019)

4.4 Selection and design of system

After analysing the solutions, floor mounted robot position welding was selected as the best suited for the implementation. The basic working idea was same in both solutions. The robot position is the only difference. A gantry is needed or the linear axis should be mounted to the ceiling for an overhang solution. As it was mentioned in the design specifications, the welding system should be transportable to different production site. Therefore, the overhang solution was not the best suited one here.

Thus, the floor mounted robot position solution was chosen largely due to its transportability, installation cost, and ease of operation. Based on the customer requirements and selection of idea, a semi-automatic robot pipe welding system as illustrated in Figure 10 was designed.

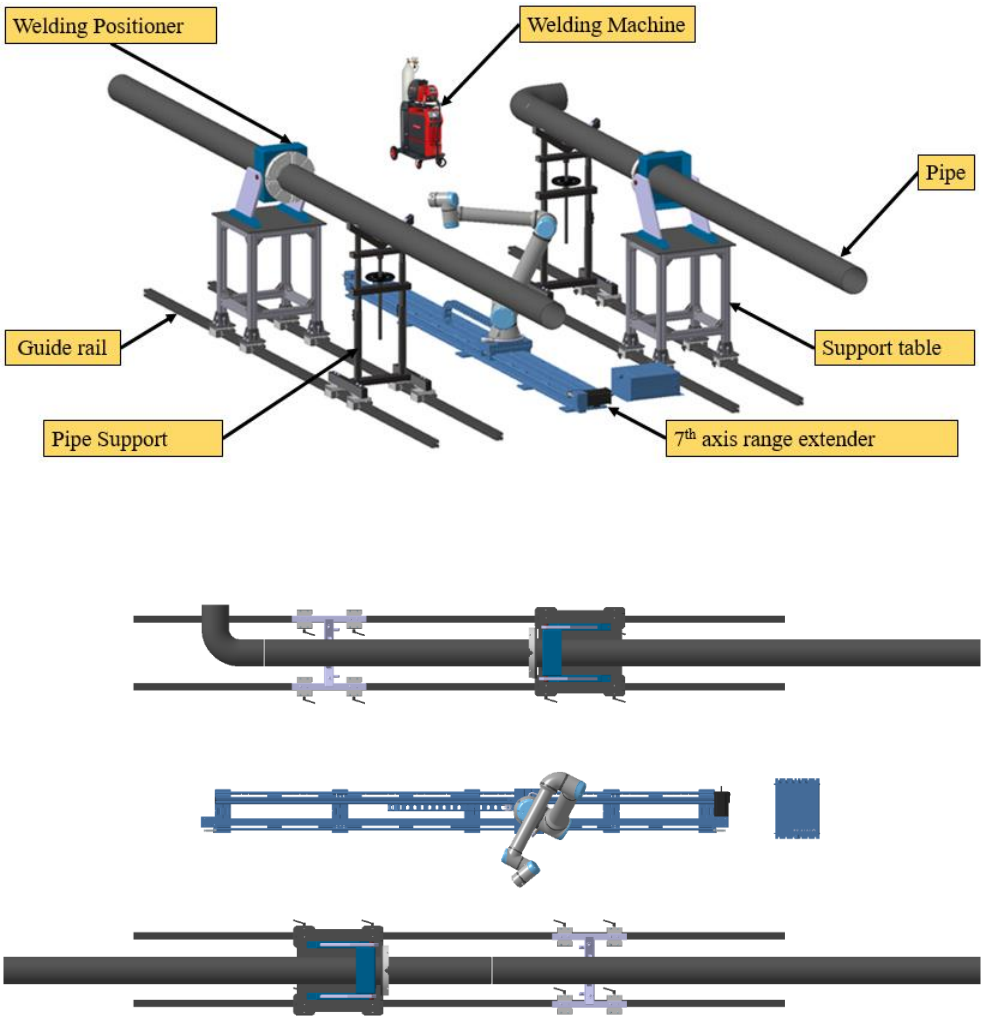

Figure 10 Design of semi-automatic robot pipe welding system

This system consisted of a Universal robot, welding machine with a robotic interface, a welding positioner, guide rails, pipe support, a 7th axis range

extender, a support table and the pipe to be welded. It was designed as per specifications set earlier.

Design features of this welding system are as follows:

1. Use of robot, automating the pipe welding system.
2. Simple design, can easily be assembled manually.
3. Welding system is transportable to different production sites.
4. Supports welding of pipe joints and elbows.
5. The through hole welding positioner enables welding pipe of length 6m.
6. Linear slide ensures the linear movement of the support table and pipe support.

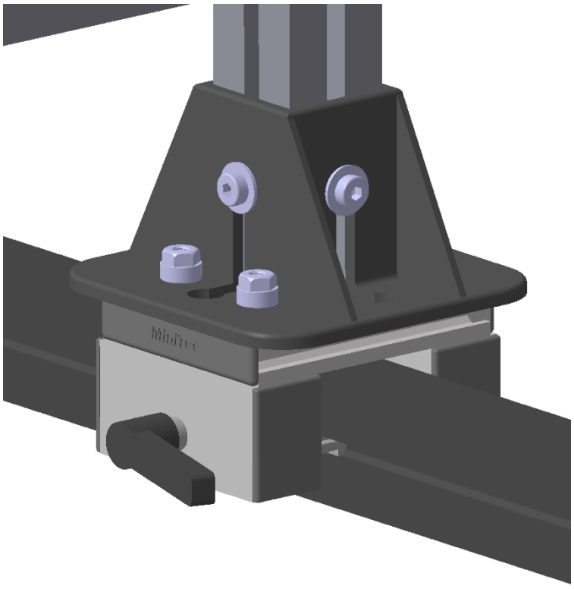

Figure 11 Connection of foot with linear slide (Minitec Framing, 2017)

The foot of the support table is connected to the linear slide with foot mounting as illustrated in Figure 11.

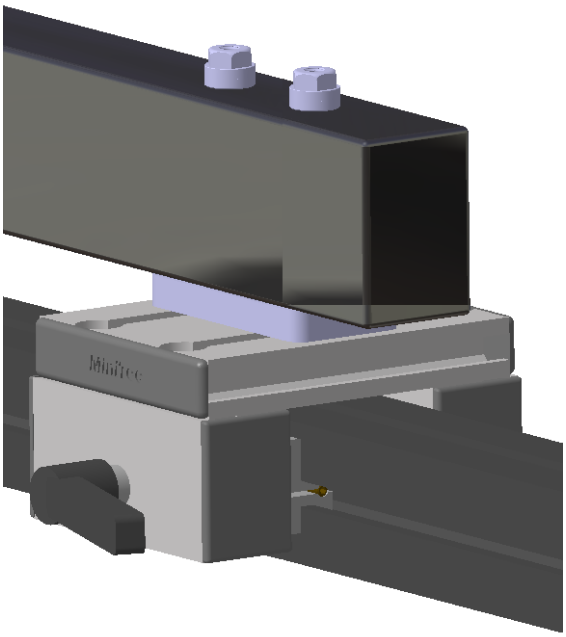

Figure 12 Connection of pipe support with linear slide (Minitec Framing, 2017)

A Small bracket is welded onto the bottom tube of the pipe support. The pipe support is then connected to the linear slide as seen in the Figure 12.

5 DESIGN COMPONENTS

5.1 Universal robot

Figure 13 Cobot from Universal robot (Universal Robots, 2019)

Industries around the world are shifting to automation to mitigate skilled manpower shortages, to increase work productivity, to enhance product quality, and to improve worker safety. Universal robot as illustrated in Figure 13 provides a cost effective, flexible and safe automation solution for wide variety of industries. Pipe welding is one of the applications UR can be used for. Further technical specifications of UR are attached as an appendix 1.

5.2 Welding machine with robotic interface

Figure 14 Welding machine (Fronius, 2019)

A welding machine as illustrated in Figure 14 is a device used to join the materials, usually metals. A robotic interface means the robot is connected to the welding machine so that the parameters can be adjusted, and other functions can be controlled from teach pendant by the welder. Basically, the connection and interaction between robot, welding machine and the welder. The computer inside robot does not only control the motion, but also the welding software that provides robot with flexible interface to the welding machine.

5.3 Welding positioner

A welding positioner is widely used in the welding industry for handling, clamping and rotating the workpiece. It is optimal equipment in welding industry, particularly that specializes in industrial pipe welding. The criterion set for selection welding positioner are ability to tilt at any angle within the 135° range, stable and high-quality construction.

There are different kinds of welding positioners commercially available in the market. One of them is shown in Figure 15.

Figure 15 Welding positioner (Merkle, n.d.)

These welding positioners are used for MIG, TIG welding, plasma cutting and other positioning tasks. It can be tilted to any angle within the 135° range. Using 3-jaw chuck, components are clamped quickly and always centric. The rotation speed is adjustable. The drive is supplied by a 24 V DC-motor with worm gear. The control electronics are installed in a closed protective housing. The operating elements are arranged clearly visible on the front plate. (Merkle, n.d.)

A hole in these positioners enables welding a pipe of any length. Further technical specifications of welding positioner are attached as an appendix 2.

5.4 Pipe support

A pipe support as illustrated in Figure 16 is an essential design element used in a pipe welding system.

Figure 16 Pipe Support (Welner Oy, n.d.)

It supports the pipe, helps to rotate the pipe with steel rollers and pipe fastener chain prevents the pipe from swinging.

Features of a pipe support

1. Adjustable height, sturdy, easily portable.
2. Zinc- coated frame and frame components.
3. Steel rollers, pipe fastener chain.
4. Maximum load 1500 kg.
5. Suitable for pipe diameters of 15-600 mm; maximum pipe wall thickness 6 mm.

5.5 Support table

The table as illustrated in Figure 17 is used for supporting the pipe support and the welding positioner. It is also required to keep the pipe to be welded at certain height from the ground so that an elbow of pipe doesn't hit the ground while rotating. It consist of aluminium profiles, base plate, angle supports and foot mountings.

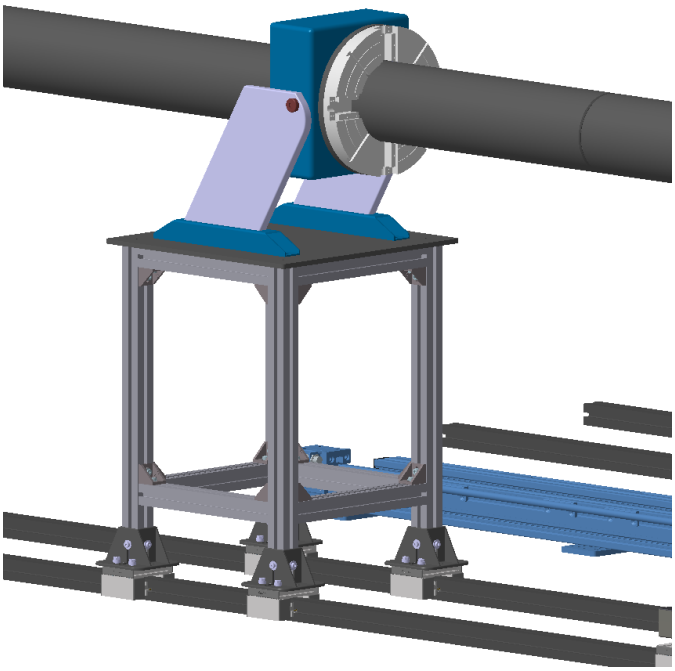

Figure 17 Support table (Minitec Framing, 2017)

Foot mountings are assembled into the linear slides. Thus, support table can be moved linearly along the guide rail with the linear slides as shown in the Figure 18.

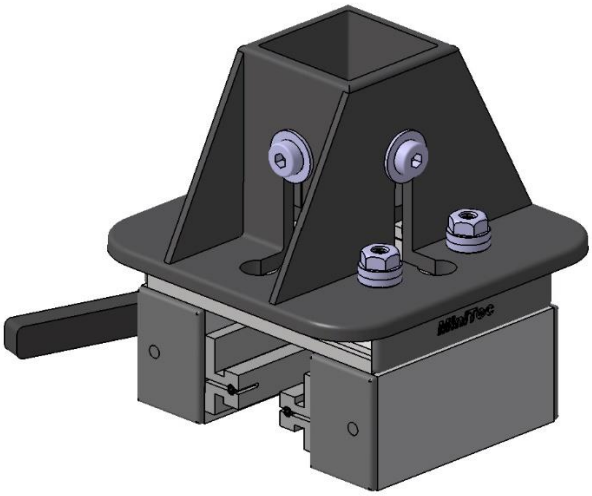

Figure 18 Linear slide (Minitec Framing, 2017)

5.6 Guide rail

A guide rail as illustrated in Figure 19 is a device or mechanism that directs objects through rail system. In case of the welding system, it is used to move welding positioner and pipe support to desired point.

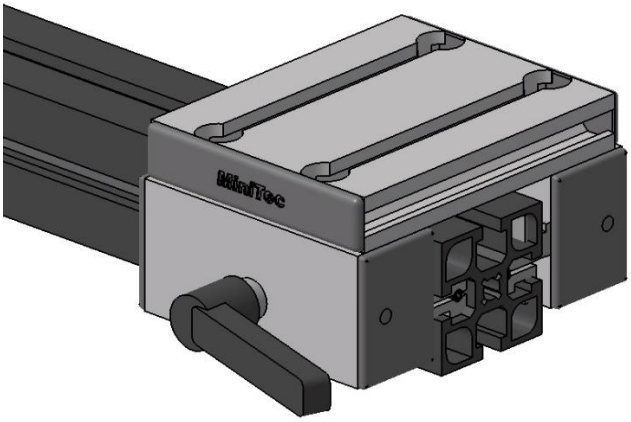

Figure 19 Guide rail (Minitec Framing, 2017)

Guide rail is used in this system as it aligns welding positioner and pipe support on a same line which results in stability during welding.

Lead screw driven linear guide is used for sliding the support table, pipe support and welding positioner along the rail. It is equipped with side lock system. It can easily lock and unlock the slide of a guide. Further technical

specifications of linear guide and aluminium profile are attached as an appendix 3 and 4 respectively.

5.7 7th axis range extender

A 7th axis as illustrated in Figure 20 is a device or mechanism that directs robot linearly along axis. It is an additional axis to the six-axis robot. Universal robot's hand held, touch screen programming interface allows to control all 7 axes of motion directly from HMI. Control is done using UR's simple to learn programming interface.

It eliminates the problem of having to learn and support programming software from multiple vendors to get the system up and running. Using an intuitive URCap application, a linear axis can be controlled directly from the UR teach pendant. Further technical specifications of 7th axis are attached as an appendix 5. (Vention, 2019)

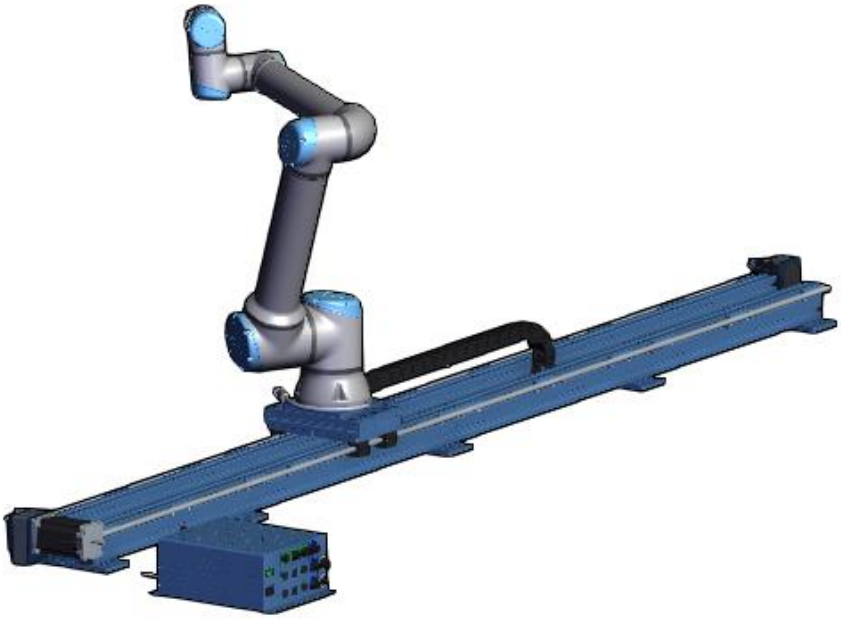

Figure 20 7TH axis (Vention, 2019)

6 WORK SEQUENCE

The sequence of the operation of the welding system is described briefly below

1. Prepare for a weld

i) Tack the pipe ends together.
ii) Place the pipe into welding positioner with pipe support in a desired position.

⇩

2. Get the robot ready

i) Program the robot.
ii) Position the weld torch attached to the robot onto the pipe joint that needs to be welded.

⇩

3. Weld the Pipe

i) Start the welding of pipe.
ii) Ensure the weld is tracking the way it is supposed to.

⇩

4. Repeat the steps

i) Prepare for the weld, robot programming and weld the pipe joint same as steps 1-3 on the other side of the system.

⇩

5. Inspect the weld

i) Inspect the weld and check for any defects.
ii) Detach the welded pipe from system.

7 COST ESTIMATION

Cost of the system was estimated by the inquiry with companies that design and manufacture the product. Most of the components are commercially available. The table below illustrates the cost estimation of the individual parts and system.

Table 2 Cost estimation of each components

S.N.	Component	Quantity	Unit Price (€)	Total Price (€)
1.	Universal robot	1	36000	36000
2.	Welding machine with robot interface accessories	1	14500	14500
3.	7TH axis	1	8300	8300
4.	Welding positioner	2	10000	20000
5.	Pipe support	2	1000	2000
6.	Guide rail			2703
I	Linear slide	16	140*16=2240	
II	Aluminium rail	16 m	28.89*16=463	
7.	Support table			511
I	Base plate	2	40*2=80	
II	Aluminium 45x45	14 m	28.89*7=203	
III	Angle bracket	32	3.25*32=104	
IV	Foot mounting	16	15.5*8=124	
8	Accessories & installation cost			2000
	Total			86014

(Jouttijärvi & Vimal Raj, 2018, p.20; Renvall, 2019)

Investment Evaluation

Investment costs

System cost	86014€
Welder wages	
Annual wage for a welder	35360€
Including employee benefits and supplementary expenses	
(17€/hr, 8hrs/day, 5days/week for 52 weeks)	
Robot replaces two welders so savings from welders	70720€

To calculate savings due to productivity increase with robot, a case study was conducted in PrePipe where twenty joints of DN500 pipes was prepared and welded. Joint preparation (tack weld) consumed two working days and remaining three days for welder to weld all the joints whereas a robot consumed a day or day and half to weld the joints, saving one or two working days in a week. On average saving twelve hours in a week approximating 500-700 hours was saved annually. This time saving result was achieved because robot can make a complete 360˚ weld in a single run unlike manual welding, pipes are loaded to the roller and the pipes are welded in two or four sections to complete the whole pipe, the sections depend on the accessibility of the welder and resource savings calculation are shown below:

Average time saved annually with robot = 12hrs/week * 52 weeks = 624hrs

Average money saved annually with robot = 624 * 17€/hr = 10608 € (Jouttijärvi & Vimal Raj, 2018, p.20)

Total wage savings = 70720 € + 10608 €

= 81328 €

The payback period and return on investment is calculated using robot investment formula for companies derived by Raye from California Polytechnic State University

$$P = \frac{C}{W+I+D-(M+S)}$$ (Raye, 2015)

$$ROI = 100 * \left[\frac{W+I+D-(\frac{C}{N}+M+S)}{C}\right]$$ (Raye, 2015)

$$D = \frac{C}{N}$$ (Raye, 2015)

Where,

P = Payback Period (year)	ROI= Return On Investment (%)
C = System Cost (€)	W = Wages Saved (€)
N = Life of Robot (year)	S = Robot Operator Cost (€)
D = Depreciation (€/year)	I = Robot Savings (€)
M = Maintenance Cost (€)	

Rated life for robot is 40000 hrs operated with a full payload and speed.

$$D = \frac{86014}{5} = 17202€/\text{year}$$

$$P = \frac{86014}{81328+0+17202-(2000+35360)} = 1.4 \text{ years}$$

$$ROI = 100 * \left[\frac{81328+0+17202-(17202+2000+35360)}{86014}\right] = 51\%$$

The payback period is approx. 1.4 years and 51 percent of ROI. The calculated payback period justify the investment required to build the semi-automatic pipe welding system.

Some limitations in the investment evaluation are:

1. Does not consider all savings.
2. Does not consider integration and programing cost of robot system.

Some factors to consider for more in-depth investment evaluation are:

1. Scrap reduction and material savings.
2. Energy costs.
3. Lost time reduction.
4. Training and administrative costs.
5. Indirect supplies (protective clothing, safety equipment & facilities)

8 CONCLUSION AND FUTURE WORK

The objective of this thesis project was to design a semi-automatic robot pipe welding system. This thesis was focused on the design of the pipe welding system with the use of a robot in the industrial pipe industry that would mitigate the shortage of skilled welders, reduce labour and material costs, enhance work productivity, and improve product quality with a higher Return on Investment and a shorter payback period for investments as well as protecting welders from health hazards.

At initial meetings with the customer on the premises of PrePipe Oy, various requirements for the design were discussed and the design process proceeded. The approach to utilize already available products such as welding positioners and pipe supports was agreed upon with the customer. Various design specifications were set during the design process. A few follow up meetings and several email exchanges were conducted with the customer and the ideas were discussed. Based on the discussions, the design was modified several times. This thesis project was approved by the customer. Therefore the main goal of the thesis project was achieved.

There is still a lot of work to be done in the design. First and foremost, programming of the robot for the weaving movement should be figured out. It was supposed to be done as a separate thesis project by another student with a computing background. Unfortunately, this project was not started. During a thesis review meeting with the commissioning party at the final stage, recent advancements emerged from the Yaskawa Motoman robot were discussed. Therefore, this robot was identified as a potential replacement of UR. The next steps would be to examine on the weaving movement of the robot, other possible improvements in the design and then moving onto the next phase; implementation of design and building the system.

To sum up, this thesis project helped me in understanding the scope of automation in the pipe welding industry. As of today, large industries that are actively involved in pipe welding globally still depend on a human welder. This project also helped me in gaining knowledge on the product design process and various other technical skills.

Finally, thank you very much to all the parties involved in this process, especially the Project Manager of PrePipe, Mika Myllys for granting me this opportunity, helping with the development and completion of this thesis project.

9 REFERENCES

Fronius. (2019). *Welding machine*. Retrieved 20 October 2019 from https://www.fronius.com/en/welding-technology/world-of-welding/tpsi-steel-edition

Heinrich, C. (2009). *Robotic pipe welding with a human touch*. Retrieved 22 October 2019 from https://www.thefabricator.com/thefabricator/article/automationrobotics/robotic-pipe-welding-with-a-human-touch

International Federation of Robotics. (2018). *Demystifying Collaborative Industrial Robots*. Position Paper. Retrieved 11 November 2019 from https://ifr.org/downloads/papers/IFR_Demystifying_Collaborative_Robots.pdf

Jouttijärvi, J., & Vimal Raj, M. (2018). *Semi-automatic robot welding for workshops*. Thesis. Mechanical Engineering and Production Technology. Saimaa University of Applied Sciences. Retrieved 10 March 2019 from https://www.theseus.fi/handle/10024/152520

Merkle (n.d.). *Welding positioner*. Retrieved 24 October 2019 from https://www.merkle.de/fileadmin/user_upload/Produkte/Automationen/Kataloge/englisch/AT_Katalog_10-2016_GB_G_CW.pdf

Miller welds. (2018). Pipe welding positions. Retrieved 15 March 2019 from https://www.millerwelds.com/-/media/53ac19bdd86d4cc0b040783643bd7d8b.pdf

Miller welds. (2018). 1G welding. Retrieved 15 March 2019 from https://www.millerwelds.com/-/media/53ac19bdd86d4cc0b040783643bd7d8b.pdf

Minitec Framing (2017). Minitec products. Retrieved 7 April 2019 from https://www.minitecframing.com/Products/MiniTec_Products.html

OH-au2mate. (2019). Collaborative robot. Retrieved 4 October 2019 from http://oh-au2mate.de/urvario/

OH-au2mate. (2019). Pipe welding with UR. Retrieved 7 April 2019 from http://oh-au2mate.de/#leistungen

Onninen. (2019). Size and weight of DN 125 and DN 150 pipes. Retrieved 13 October 2019 from https://www.onninen.com/sitecollectiondocuments/finland%20documents/palvelut/hinnastot/teollisuushinnasto/rst_hst-putkistohinnasto%2010_2019.pdf

Raye, R., (2015). *Economic Analysis and Justification for Automated Welding Systems*. Retrieved 24 October 2019 from http://digitalcommons.calpoly.edu/cgi/viewcontent.cgi?article=1186&context=imesp

Renvall, T. (2019). Price of Minitec products. Email to the author 10 October 2019

Summers, K., & Stevens, R. (2008). Automating WELDING OPERATIONS. *Manufacturing Engineering, 141*(6), 87-88, 90-92, 94. Retrieved 30 October 2019 from Ebrary database https://search-proquest-com.ezproxy.hamk.fi/docview/219721890?accountid=27301

Universal Robots. (2019). Cobot from Universal Robots. Retrieved 20 October 2019 from https://www.universal-robots.com/

Vention. (2019). Overhead robot position. Retrieved 5 October 2019 from https://www.vention.io/tags/designs/overhang-universal-robots

Vention. (2019). 7th Axis Range Extender (2970 mm). Retrieved 5 October 2019 from https://www.vention.io/designs/7th-axis-range-extender-2970mm-32626

Welner Oy. (n.d.). Pipe Support. Retrieved 17 October 2019 from https://welner.fi/en/tuotteet/pipe-stand-set/

Appendix 1

TECHNICAL SPECIFICATIONS OF UNIVERSAL ROBOTS

UR10e technical details

Specifications

Payload	10 kg (22 lbs)
Reach	1300 mm (51.2 in)
Degrees of freedom	6 rotating joints
Programming	12 inch touchscreen with polyscope graphical user interface

Performance

Power, Consumption, Maximum Average	615 W
Power, Consumption, Typical with moderate operating settings (approximate)	350 W
Safety	17 configurable safety functions
Certifications	EN ISO 13849-1, PLd Category 3, and EN ISO 10218-1

Force Sensing, Tool Flange	Force, x-y-z	Torque, x-y-z
Range	100.0 N	10.0 Nm
Precision	5.0 N	0.2 Nm
Accuracy	5.5 N	0.5 Nm

Movement

Pose Repeatability per ISO 9283	± 0.05 mm

Axis movement	Working range	Maximum speed
Base	± 360°	± 120°/s
Shoulder	± 360°	± 120°/s
Elbow	± 360°	± 180°/s
Wrist 1	± 360°	± 180°/s
Wrist 2	± 360°	± 180°/s
Wrist 3	± 360°	± 180°/s

Typical TCP speed	1 m/s (39.4 in/s)

Features

IP classification	IP54
ISO 14644-1 Class Cleanroom	5
Noise	Less than 65 dB(A)
Robot mounting	Any Orientation
I/O ports	
Digital in	2
Digital out	2
Analog in	2
Tool I/O Power Supply Voltage	12/24 V
Tool I/O Power Supply	2 A (Dual pin) 1 A (Single pin)

Physical

Footprint	Ø 190 mm
Materials	Aluminium, Plastic, Steel
Tool (end-effector) connector type	M8 | M8 8-pin
Cable length robot arm	6 m (236 in)
Weight including cable	33.5 kg (73.9 lbs)
Operating Temperature Range	0-50°C
Humidity	90%RH (non-condensing)

Control box

Features

IP classification	IP44
ISO 14644-1 Class Cleanroom	6
Operating Temperature Range	0-50°C
I/O ports	
Digital in	16
Digital out	16
Analog in	2
Analog out	2
Quadrature Digital Inputs	4
I/O power supply	24V 2A
Communication	500 Hz Control frequency Modbus TCP PROFINET Ethernet/IP USB 2.0, USB 3.0
Power source	100-240VAC, 47-440Hz
Humidity	90%RH (non-condensing)

Physical

Control box size (WxHxD)	475 mm x 423 mm x 268 mm (18,7 in x 16,7 in x 10,6 in)
Weight	12 kg (26.5 lbs)
Materials	Powder Coated Steel

Teach pendant

Features

IP classification	IP54
Humidity	90%RH (non-condensing)
Display resolution	1280 x 800 pixeles

Physical

Materials	Plastic, PP
Weight including 1m of TP cable	1,6 kg (3,5 lbs)
Cable length	4,5 m (177,17 in)

UNIVERSAL ROBOTS

universal-robots.com

Appendix 2

TECHNICAL SPECIFICATIONS OF WELDING POSITIONERS

Dia. G - 7

Technical Details:	D 102/60-400 D 102/150-400	D 302/60-400 D 302/150-400
Load Capacity (vertical)	100 kg/1,0 kN	100 kg/1,0 kN
RPM	0,1 - 10 min^{-1}	0,05 - 5 min^{-1}
Torque	15 - 50 Nm	30 - 100 Nm
Face Plate Dia	400 mm	400 mm
Groove - Face Plate (only spindle bore 60mm)	14 mm for M12	14 mm for M12
Table Height	400 mm	400 mm
Axle Height	320 mm	320 mm
Spindle Bore	60 mm 150 mm	60 mm 150 mm
Centralising Bore (Chuck or Jig Mount)	ø 78H7 3mm deep (60) ø 154H7 25mm deep (150)	ø 78H7 3mm deep (60) ø 154H7 25mm deep (150)
Tilting Angle Face Plate	135°	135°
Tilting Movement	manual lockable and detents engagement	manual lockable and detents engagement
Tilting Moment	130 Nm	130 Nm
Max Dia - ø	490 mm	490 mm
Current Collector	400A (34V) 80% ED	400A (34V) 80% ED
Mains Voltage	230V / 240V	230V / 240V
Frequency	50 / 60Hz	50 / 60Hz
Mains connection cable	3x2,5 mm^2, 5 m with Schuko plug	3x2,5 mm^2, 5 m with Schuko plug
Interface for external operation	Foot Switch, Hand and Foot Remote	Foot Switch, Hand and Foot Remote
Speed range	1:100	1:100
Limit switch overlap 360° + overlap length	Option	Option
Weight	65 kg	66 kg

Appendix 3

TECHNICAL SPECIFICATIONS OF LINEAR GUIDE

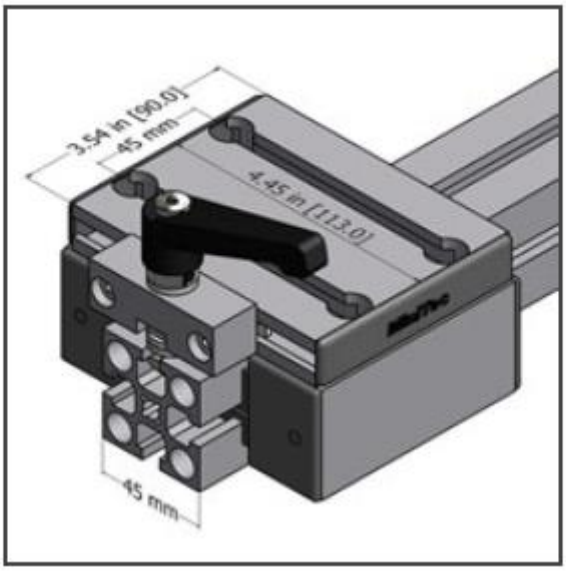

TECHN. DATA / ITEMS SUPPLIED	
- Slide ships fully assembled	
- 2 Slide Rails LN, UHMW plastic bearing	
- End caps	
- Ratchet handle top lock	
- Designed for use with profiles 45mm wide *(Profile sold separately)*	
- Max Load	- 450 N (101 lbf)
- Weight	- .90 kg

Appendix 4

TECHNICAL SPECIFICATIONS OF ALUMINIUM PROFILE

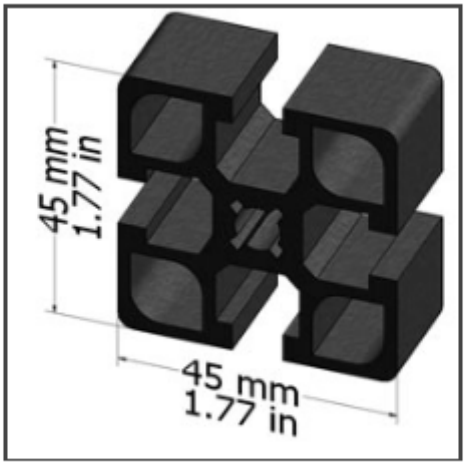

TECHN. DATA / ITEMS SUPPLIED	
- 6063 aluminum, anodized matte black	
- Order cut precisely to size or in full lengths	
- CNC machining services available E-mail prints to: sales@minitecframing.com	
- Ix =	14.172 cm^4
- Iy =	14.172 cm^4
- wx =	6.298 cm^3
- wy =	6.298 cm^3
- Weight	2.005 kg/m
- For Cut Charge Use Part # 25.1094	
- Full length	6 m
- Packing unit	36 m

Appendix 5

TECHNICAL SPECIFICATIONS OF 7TH AXIS RANGE EXTENDER

Technical Specifications

Design Number:	RA-EX-32626
Version:	
Weight:	62.7 kg
Dimensions:	229 x 875 x 3277 mm
Unit Price:	$8747.86
Category:	Robot Cell
Sub-Category:	Robot Range Extenders
Design Author:	Vivian Cheung
Status:	All parts available
Assembly Time (Beta):	7:16 Hrs
Related Partners:	Universal Robots