Expertise
and insight
for the future

Owusu Prince Yeboah

Microstrip Butterworth Lowpass Filter Design

Metropolia University of Applied Sciences

Bachelor of Engineering

Electronics Engineering

Bachelor's Thesis

13th January 2020

Author Title Number of Pages Date	Prince Yeboah Owusu Microstrip Butterworth Lowpass Filter Design 29 pages + 1 appendix 13th January 2020
Degree	Bachelor of Engineering
Degree Programme	Electronics Engineering
Professional Major	
Instructors	Heikki Valmu, Principal Lecturer (Metropolia UAS)

Lowpass filters of different kinds are almost ubiquitous in RF and microwave engineering applications. The design of filters therefore is crucial in the study of electronics. This thesis aims to explore the design of three different types of Lowpass Butterworth filter namely Lumped element, Stepped Impedance and Stubs designs, and then compare and contrast their various stimulated responses and actual responses.
This paper gives a rather brief but succinct theoretical framework and, where necessary, some historical background to the subjects and focuses more on the design. There is a great amount of literature on the in-depth mathematical and design identities used in this paper. This thesis utilizes the available knowledge for the designs. The filters were designed with specific given parameters employing the NI AWR software for design and simulation. Finally, the designed layouts were printed using of a PCB printing machine and analyzed using a network analyzer.
The results obtained weren't as expected, the Lumped element design produced an unexpected accurate response while the measured response of the other two designs was not the desired results. The cut-off frequency of 1Ghz used was perhaps too low.

Keywords	Filter Design, Lowpass, Microstrip, Radio Frequency(RF), Butterworth

Contents

List of Abbreviations

AWR	Applied Wave Research. A comprehensive electronic design for developing RF/microwave products.
BPF	Band Pass Filter
BSF	Band Stop Filter
C	Capacitor
HPF	High pass filter
IRE	Institute of Radio Engineers
L	Inductor
LPF	Low pass Filter
NI	National Instruments, the company behind the development of the software
Op-amp	Operational Amplifiers
R	Resistor
TEM	Transverse Electromagnetic
U .E	Unit Element

1 Introduction

Electronic circuits largely require some kind of filters for the intended optimal operation. In analog circuit design, it is of distinct importance to control high-frequency signals so as to accept and improve or attenuate and reject certain frequency ranges or frequency bands [1, 201].

Contemporary times have seen colossal advancement of telecommunication technologies including, but not limited to, televisions, mobile phones, routers, and tablets. These technologies which are dependent on Radio Frequencies for communication operations require filtering units to enable the desired wave signal received with minimal to no noise. Transmission of Radio and microwave signals occurs essentially in free space and, hence can be reflected, refracted and or diffracted in the face of imminent structures such as buildings, trees, water bodies, etc. Therefore the interference that affects these signals must be filtered out in order to receive the originally intended information carried by the signal. Microstrip filters can be used to attain this goal quite efficiently. [2.]

The design of filters is therefore crucial in the study of electronics so this thesis aims to explore the design of three different types of Lowpass Butterworth filter and then compare and contrast their various stimulated responses and actual responses. This paper gives a rather brief but succinct theoretical framework and where necessary some historical background to the subjects and focuses more on the design. There is a great amount of literature on the in-depth mathematical and design identities used in this paper. This thesis utilizes the available knowledge for the designs. The filters were designed with specific given parameters and employs the NI AWR software for design and simulation. Finally, the designed layouts were printed by means of a PCB printing machine and analyzed using a network analyzer. The results obtained are documented in this paper and a logical conclusion reached.

2 Filters

Filters are important building units in numerous systems, especially in communication and instrumentation systems. Filters allow particular set of frequency band of a signal to pass while disabling another frequency band of the signal, a filter therefore is a circuit whose transfer function (ratio of output to input) depends on frequency [4].

Filters usually are classified as being digital or analog. Digital filters can be implemented by means of digital computer specified for the particular kind of filtering. Digital filtering generally involves a computational process that transforms a digitized analog input signal of a particular sequence to an output signal of a different sequence [3, 353], therefore a digital filter can execute functions such as integration, differentiation, estimation and also can filter out undesired frequency bands. [4.]

Analog filters which are the focus of this paper are largely used to filter out undesired frequency bands in a system. Normally such filters can be implemented by means of R, L, C components and op-amps. They can be classified as being active or passive.

The active filter is one that contains a power source like that of an op-amp in addition to the R, L, C components. The passive filter which specifically is the focus of this paper on the hand is one that does not contain a power source but only the R, L, C components as shown in the figure below.

Filters are also two port networks as illustrated in figure 1 below that ideally cause zero insertion loss at the passband and infinite attenuation at the stopband.

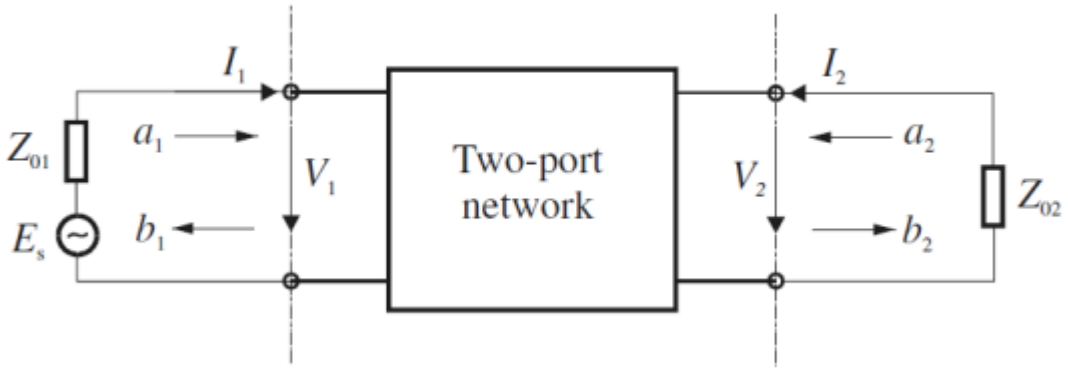

Figure 1. Variables of Two-port network. [2]

2.1 Low pass Filter

A low pass filter is a filter that allows or passes signals of lower frequencies than the set cut-off frequency, while rejecting by means of attenuation signals of higher frequencies than the cut-off or corner frequency. The cutoff frequency is the frequency of reference for the operation of the filter. In figure 2a below is simple first order passive RC Lowpass filter. Note that the number of orders or pole is determined by the number of reactive components in the filter circuit. In this case there is only one capacitor hence first-order or one-pole. [5.]

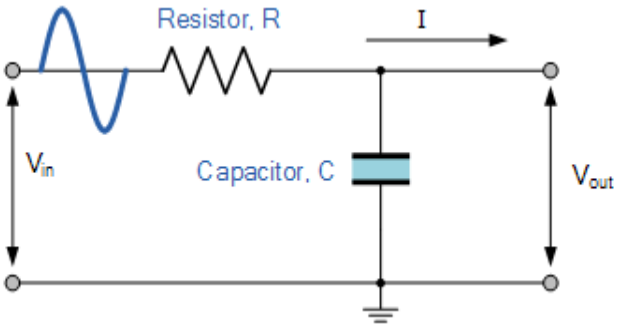

Figure 2a. A simple passive LPF. [5]

The frequency response of a low pass filter, as explained earlier is illustrated by figure 2b below, where it can be observed that at low frequencies thus before the fc there is a flat response indicating that all of the input signal is passed to output, and this because at low frequencies the very high reactance of the capacitor prevents current from flowing through. At frequencies higher than the fc the reactance of the capacitor is lowered so much to the point where it gives off a short circuit effect at the output terminal thereby causing the signals to attenuate. [5.]

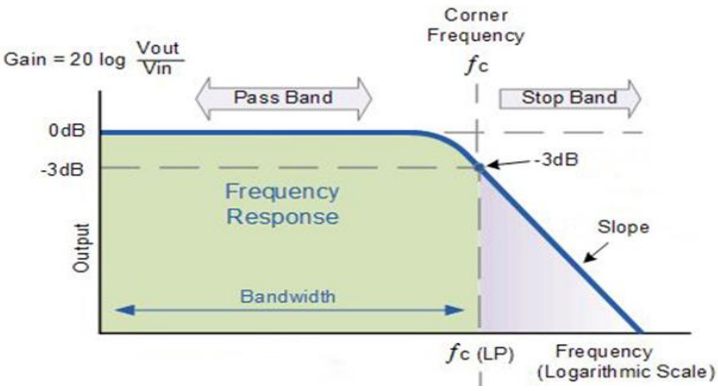

Figure 2b. The frequency response of a Lowpass filter. [5]

2.2 High Pass Filter

A high pass filter is the reverse of a low pass filter, so in this case the filter allows or passes signals of frequencies greater than the cut-off frequency, while rejecting those frequencies lower than the cut-off frequency. Figure 3a below depicts a simple passive 1st order high pass filter, notice the placement of the components are switched compared to the low pass filter.

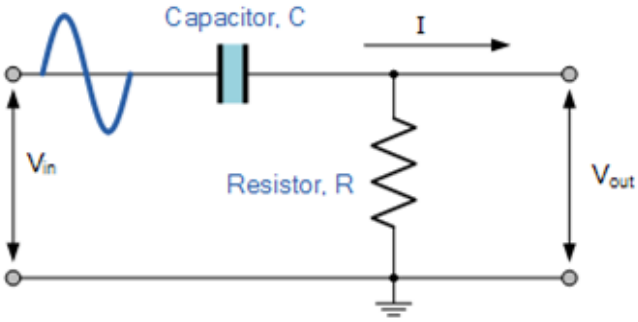

Figure 3a. A simple passive HPF. [6]

At frequencies lower than the fc the filter attenuates and thereby rejects the signal and passes signals whose frequencies are higher than fc. Figure 3b below illustrates the exact opposite frequency response curve to the low pass filter.

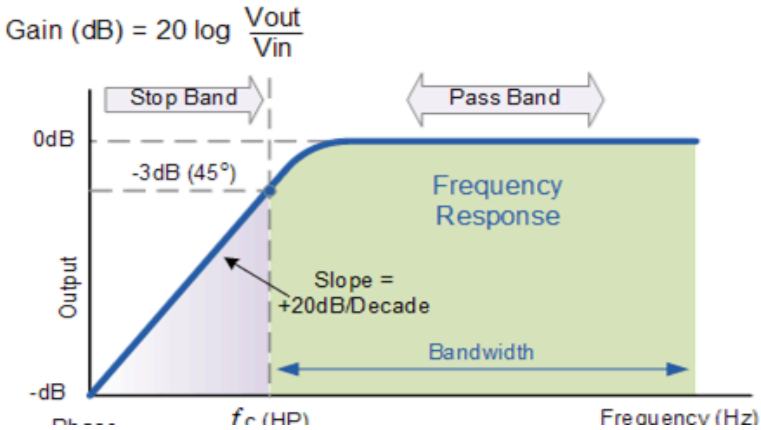

Figure 3b. The frequency response curve of a HPF. [6]

2.3 Band Pass Filter

Band pass filter just like other filters discussed above is used to pass certain signal frequencies and reject others, except in this case it does so by passing the frequencies specified within a range or band. So usually one designs this type of filter with a specific

intended frequency range in mind, i.e. a spread which is between a low frequency (f_L) and a higher one (f_H).This type of filter can be designed by essentially combining a high pass filter with a low pass filter. In figure 4a below is the circuit representation of the filter, note that that the cascading of the components, the high pass filter comes first followed by the LPF. [7.]

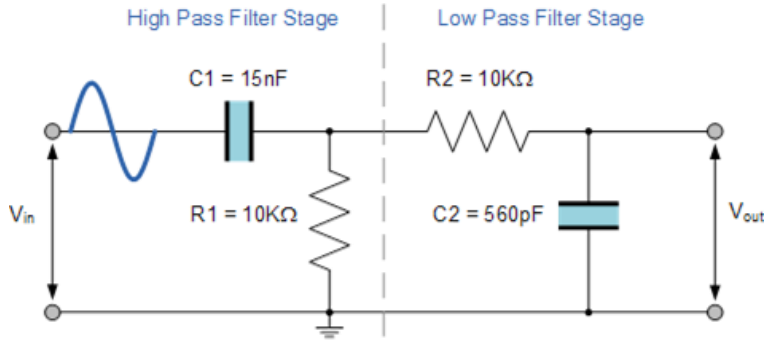

Figure 4a. Circuit of Band pass filter. [7]

The frequency of response is also essentially a combination of that of the LPF and the HPF as is perhaps already hinted by the circuit schematics above, see figure 4b below.

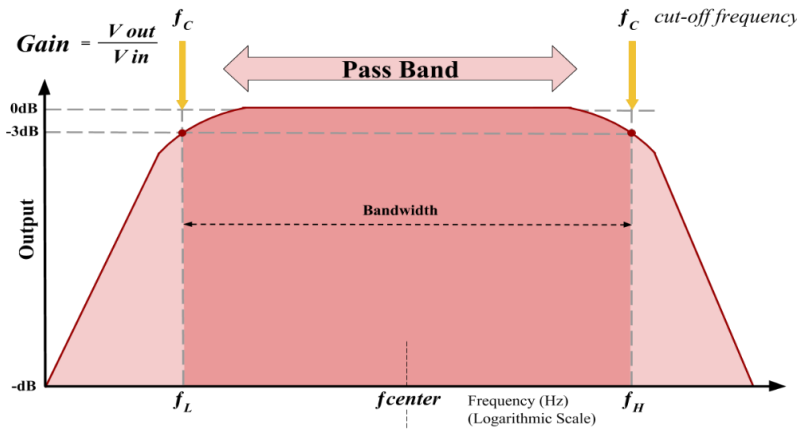

Figure 4b. The frequency response of a band pass filter. [8]

Filters realistically do not totally block undesired signals, particularly in this type of filter the signals in regions closer to passband are attenuated but not necessarily rejected. In band pass filters it is important to define the selectiveness of the filter, the quality (Q) factor. A high Q factor filter indicates that the filter has a narrower band pass and a low Q factor indicates that the filter has wider band. [8.]

2.4 Band Stop Filter

Also known as the band-reject filter, it is also a frequency selective filter that operate in the exact opposite to the BPF discussed earlier. Frequencies within a specified range are attenuated and rejected or stopped while all other frequencies are passed. In figure 5a below is a circuit of an active BSF, notice that it is a combination of LPF and HPF in a parallel connection.

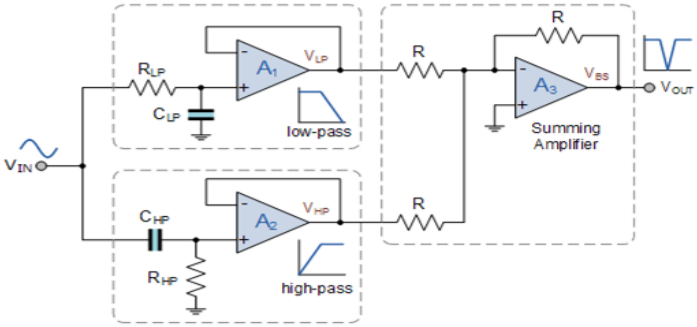

Figure 5a. Circuit of an Active BSF. [9]

The frequency response of the BSF depicted in figure 5b below shows the stopband where the frequencies in that region is attenuated and rejected or stopped, meanwhile there are two passbands regions representing the LPF and the HPF so it can be said that the f_L and f_H are fc for LPF and HPF respectively.

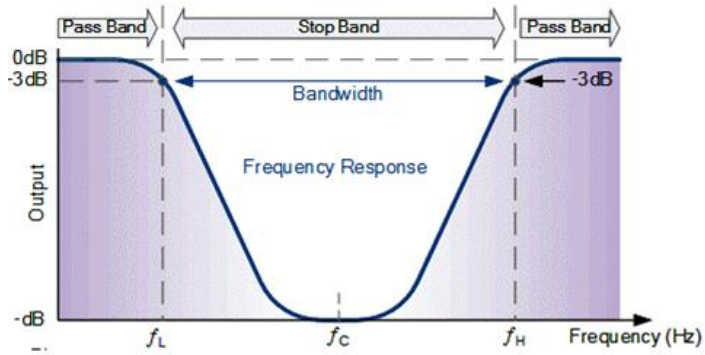

Figure 5b. Frequency response characteristics of BSF. [9]

3 Filter Approximations

Here we look at a more in-depth classification of analogue filters based closely on how best frequency responses can be best approximated particularly for higher orders. In communication and control systems applications where the frequency spectrum of signals are shaped by filters, first order filters are ineffective and so therefore we require

designs with higher orders. Based on certain properties that a filter embodies more than another, approximation functions that best approximate the transfer function of filters have been deduced [10]. Below is a list that captures and explain these properties.

- Roll-off - the slope of the filter's response in the transition region which is between the passband and stopband regions.
- Flatness/Ripple - the static or variation in attenuation of the input signal in the passband or stopband which is specified dB

3.1 Butterworth Filter

Introduced by the British Engineer Stephen Butterworth in 1930 [11], this filter displays an almost flat response in the passband thus with no ripple and therefore also referred to as *maximally-flat*. Its roll-off is very smooth and, thus monotonic. This maximum flatness is achieved by trading off a relatively wide transition region from the passband to stop band, and also poor phase characteristics. In figure 6 below we see frequency response of the Butterworth (binomial) filter at different orders, notice that the higher the order the steeper the roll-off thereby closer to the ideal response. [10.]

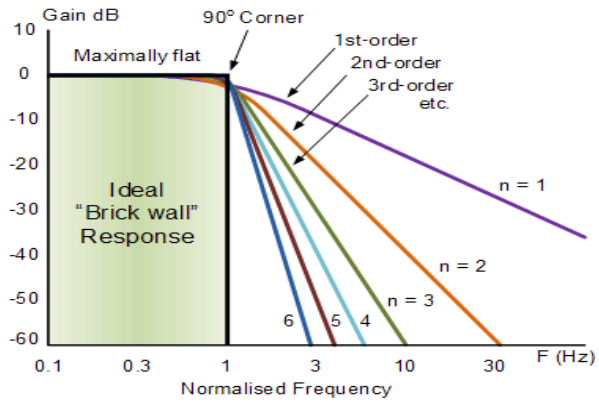

Figure 6. Butterworth Filter Frequency Response. [10]

3.2 Chebyshev Filters

It was named after the Russian Mathematician Pafnuty Chebyshev because it takes its mathematical identities from the Chebyshev polynomials. This filter has a steeper roll-off in its transition band at the expense of the ripples in the passband or stop band, these ripples usually maintain equal amplitude in either the passband or the stopband. There are two types of this filter, the Chebyshev type one filter which is the most common and has the steepest roll-off but displays ripples in the passbands and the Chebyshev type

two filter also called the inverse Chebyshev which does not have a steep roll-off as the type one, requires more components but does not display ripples in the passband rather an equi-rippple (equalized ripple) in the stopband. Chebyshev filters in general have a bad phase response. [12.] In the figure 7 below we see the frequency response of the

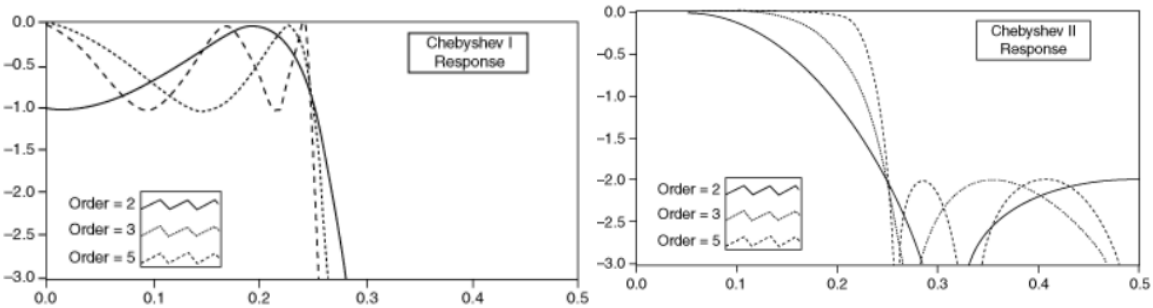

Chebyshev filters, notice the ripples in the bands.

Figure 7. The frequency response of the Chebyshev filters. [13]

3.3 Elliptic Filter

Otherwise known as the Cauer filter named after German mathematician Wilhelm Cauer, sometimes also referred to as Zolotarev filter named after the Russian mathematician Yegor Zolotarev [14]. This filter has the steepest roll-off among all the filter categories thereby providing the quickest and sharpest transition between passband and stopband, however it exhibits ripples in the amplitude in both the passband and the stopband. However a very down side to this filter is that the phase response is quite nonlinear compared to other filters. Disregarding phase shifts and perhaps ripples, for frequency range responses it does the job with the lowest order. Figure 8 below is the frequency response of the elliptic filter, notice the ripples in both band pass and stopband. [13.]

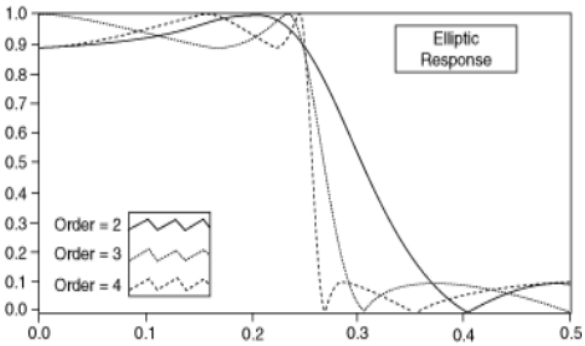

Figure 8. The frequency response of the elliptic filter. [13]

3.4 Bessel Filter

It was named after German Mathematician Friedrich Bessel whose mathematical theory is the foundation on which the filter is based, other times it is also referred to as Bessel-Thomson to recognize W. E. Thomson who devised the application of Bessel's functions in the design of the filter in 1949. [15.] The Bessel filter has maximally flat amplitude and phase response with a very gentle roll-off. Its usage is largely in audio crossovers. In figure 9 below we see the magnitude and phase responses of the filter. [13.]

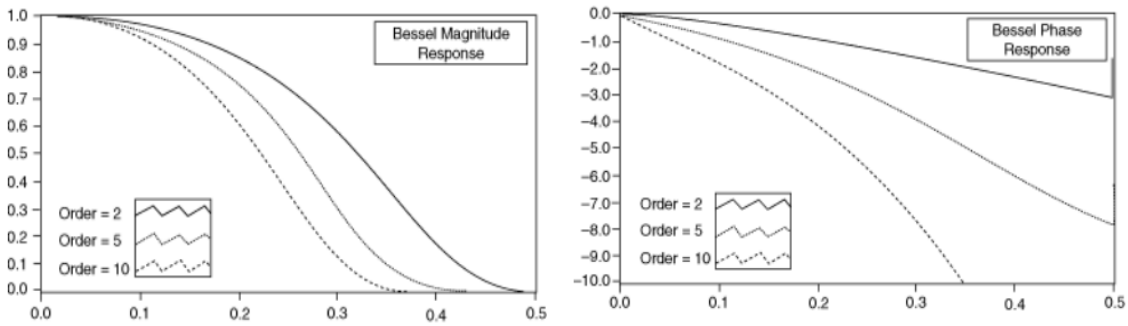

Figure 9. The Frequency response of the Bessel Filter. [13]

4 Lumped Element filter

These are filters whose circuit design are based on the fundamental assumptions that circuits are composed of discrete components and that any effects on voltages/currents are concentrated or lumped at points where these components are located. Also the conductors connecting to form a network are assumed to be perfect and therefore have no material effect on the circuit. Another assumption is that the time it takes for the wave signal propagation is not finite and so suitable for designs where the propagation time is not particularly significant. Ultimately we are looking at the physical size of components being negligibly small compared to the wavelength of the electromagnetic wave propagation of the network. Lumped element filters are highly suitable for lower frequency designs, they tend to have wider bandwidths and also easy to design. [16; 17.] Basically, filter designs physically comprising of R, C and L among other components are said to be lumped element filters.

5 Distributed Element Filter

The assumptions made for Lumped element design are all eschewed for this design. In this filter, inductance, capacitance and resistance are not concentrated in discrete elements/components as inductors, capacitors and resistors respectively, but rather discontinuities caused by the elements create reactive impedance to the wave signal moving across the filter, and it is these reactance that are used as approximations for lumped inductors and capacitors. As frequency increases, the physical sizes of the discrete components are no more negligibly small, thereby rendering lumped elements highly undependable because the elements approach a significant fraction of the wavelength, and so distributed elements, even though can be used at all frequencies become distinctly important at higher frequencies. Distributed elements filters have the elements inseparably distributed together along the length of the conductor, the conductors are the transmission lines (coaxial cable, stripline, and microstrip). This filter design usually considers only capacitance and inductance but as a unit, since they are inextricable. Fundamentally this design involves the transformation of discrete components circuits to transmission line equivalents as shown in figure 10 below.

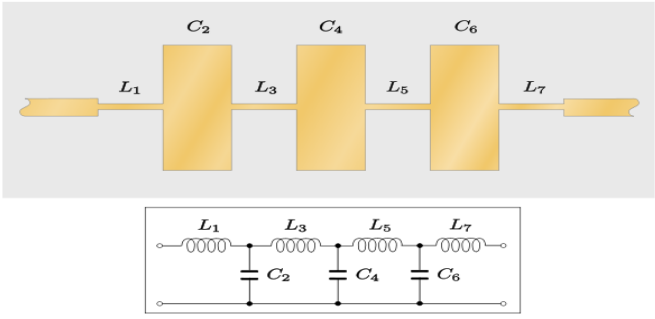

Figure 10. The distributed element equivalent of a lumped element filter. [21]

5.1 Mictrostrip Line

As mentioned earlier microstrip line is a type of planar transmission line consisting of a conducting strip and a ground plane separated by a dielectric substrate layer as depicted in figure 11a below. Gold and Copper are often the conductors. The electric and magnetic field lines between the strip and the ground plane are not totally captured in the substrate as seen in figure 11b below, therefore the wave propagation mode is not wholly TEM but rather quasi-TEM. Grieg and Engelmann of ITT laboratories developed microstrip line and first published it in the 1952 IRE proceedings [18]. Comparatively

microstrip lines have lower peak power handling capacity and higher losses, since microstrip lines are unclosed like waveguides, they are prone to cross-talk and radiation. Note that the designs in this paper uses the standard PCB FR-4 substrate which isn't necessarily ideal but works and was readily available.

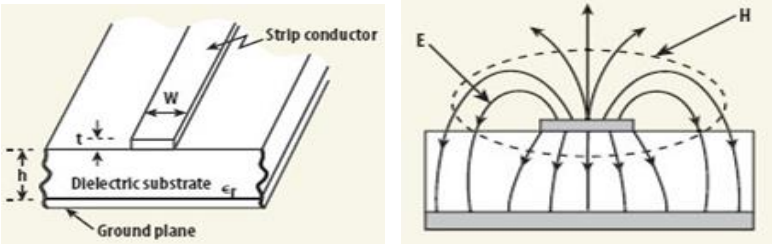

Figure 11(a) (b) The cross-section of a microstrip line and the electric and magnetic fields propagation. [20]

6 Filter Design

For the purpose of this paper, two port fifth order LC Butterworth Low pass filter networks were designed with a cutoff frequency of 1GHZ. Using readily available equations and formulas, the necessary calculations were done, the NI AWR software was used for circuit designs and simulations. The three common types of designs, namely lumped element, stepped impedance and stub designs were carried out.

6.1 Lumped-Element Filter

In figure 12 below is a schematic prototype of a 5th order LC shunt input LPF. Using the required equations the desired component values was computed. Notice the two 50 ohm ports

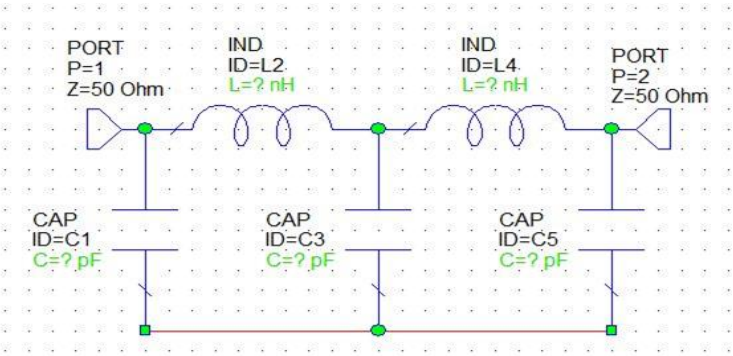

Figure 12. The schematic circuit of the filter.

This design really began by identifying and selecting the normalized approximated components coefficients using the standard coefficient table for Butterworth LPF. In table 1

below the 5th order coefficients were selected.

Table 1. Low Pass Butterworth Filter Coefficients

N	g_1	g_2	g_3	g_4	g_5	g_6	g_7	g_8	g_9	g_{10}	g_{11}
1	2.0000	1.0000									
2	1.4142	1.4142	1.0000								
3	1.0000	2.0000	1.0000	1.0000							
4	0.7654	1.8478	1.8478	0.7654	1.0000						
5	0.6180	1.6180	2.0000	1.6180	0.6180	1.0000					
6	0.5176	1.4142	1.9318	1.9318	1.4142	0.5176	1.0000				
7	0.4450	1.2470	1.8019	2.0000	1.8019	1.2470	0.4450	1.0000			
8	0.3902	1.1111	1.6629	1.9615	1.9615	1.6629	1.1111	0.3902	1.0000		
9	0.3473	1.0000	1.5321	1.8794	2.0000	1.8794	1.5321	1.0000	0.3473	1.0000	
10	0.3129	0.9080	1.4142	1.7820	1.9754	1.9754	1.7820	1.4142	0.9080	0.3129	1.0000

So in this case the coefficients are;

$g_1 = 0.6180 \quad g_2 = 1.6180 \quad g_3 = 2.0000 \quad g_4 = 1.6180 \quad g_5 = 0.6180.$

Using these coefficients the components values were computed and denormalized using the formulas (1), (2).

$$C_n = \frac{g_n}{2\pi F_C R} \quad \text{.....} \quad (1)$$

$$L_n = \frac{g_{nR}}{2\pi F_C} \quad \text{.....} \quad (2)$$

So for example;

$$C_1 = \frac{g_1}{2\pi F_C R}$$

$$C_1 = \frac{0.6180}{2\pi * 1GHz * 50}$$

$$C_n = 1.967pF$$

$$L_2 = \frac{g_{2R}}{2\pi F_C}$$

$$L_2 = \frac{1.6180 * 50 g_{nR}}{2\pi * 1GHz}$$

$$L_n = 12.876nH$$

Using the software the values were inserted as seen in figure 13 below

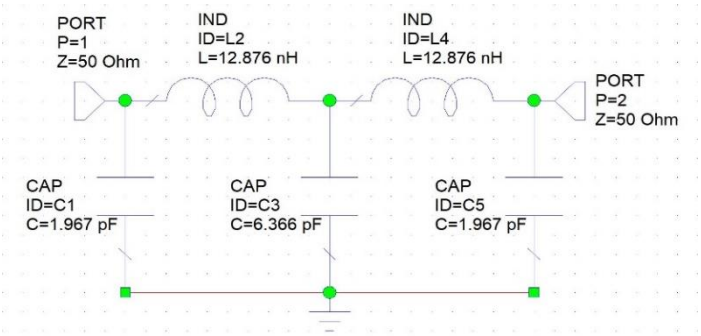

Figure 13. Circuit Schematic with values of the components.

In order to make the components physically realizable and obtainable they were approximated as seen in figure 13a below and stimulated for the frequency response as shown in figure 13b.

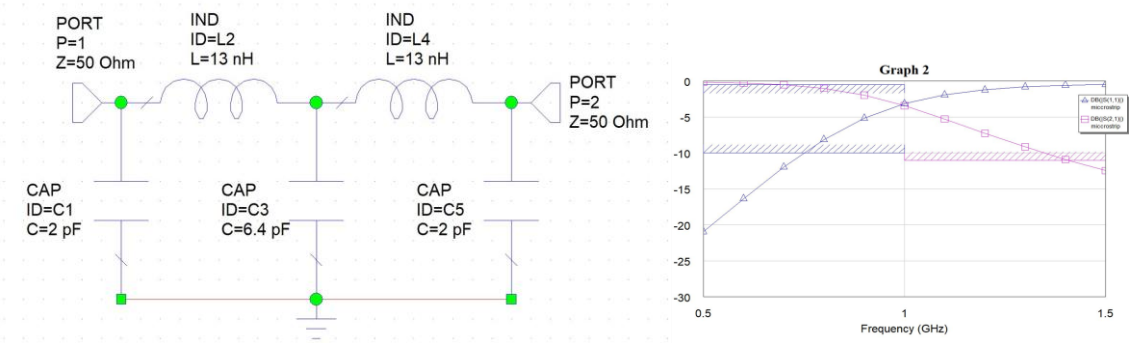

Figure 13 (a) (b). Circuit Schematics with the approximated components values and its frequency response.

For a distributed element filter all components were replaced with stubs or lines as would be seen later but in this case the actual components were not replaced but rather microstrip (in this case the PCB FR4 substrate) lines used as the conductor lines. The circuit schematic shown in Figure 13a above was then translated into a microstrip lumped element circuit schematics as seen below in Figure 14a. The circuit was then stimulated and optimized to obtain the best possible frequency response shown in figure 14b below

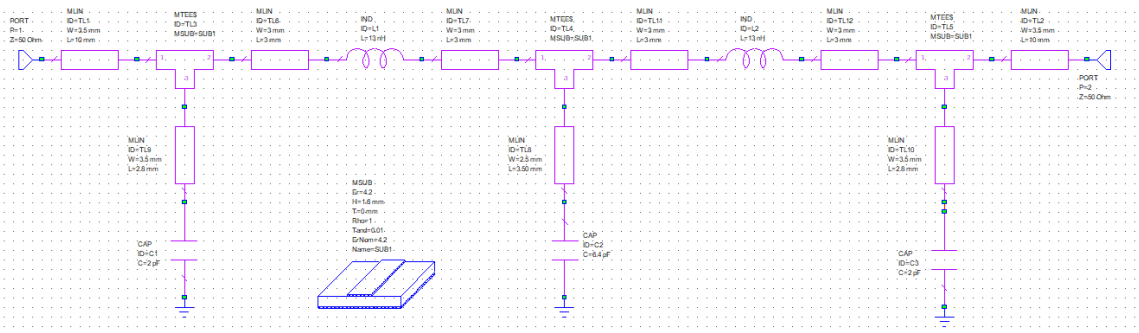

Figure 14a. Microstrip Lumped Element Circuit

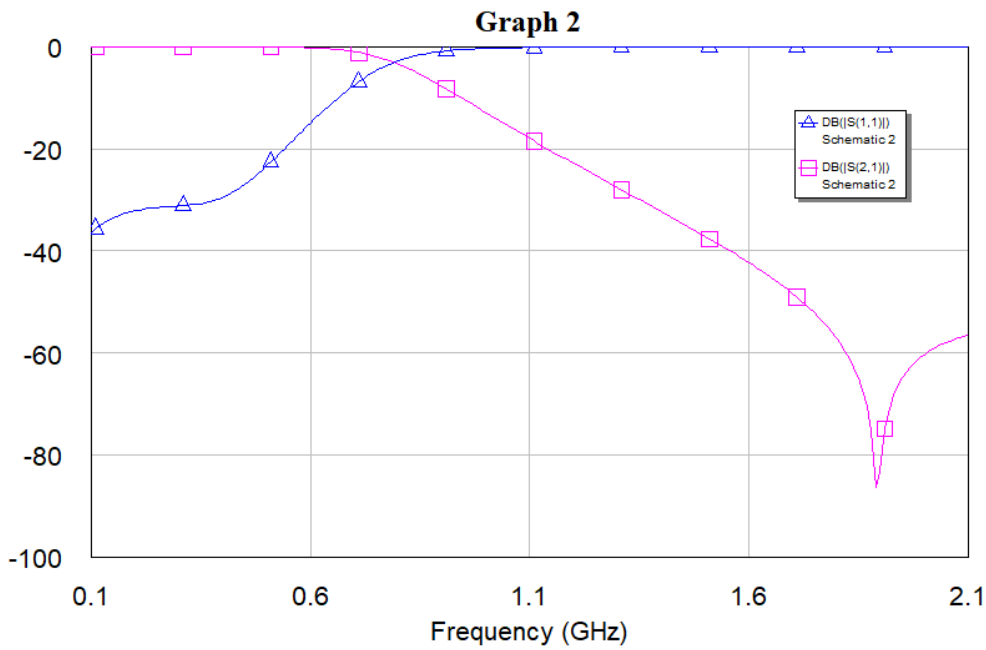

Figure 14b. Frequency response of the Lumped Element Circuit.

By means of the AWR software, the logic schematic shown in figure 14a above was then translated into a printable layout as shown in figure 15 below. Finding available larger physical components and corresponding chip sizes proved a little difficult so 0803 for all components was used except the middle capacitor which 0604 was used.

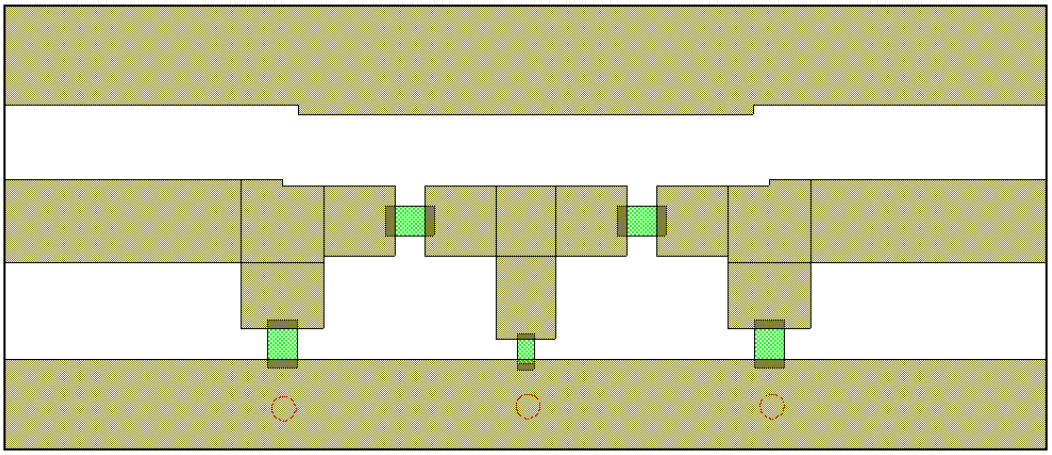

Figure 15. Layout of the Lumped Element Filter

The layout was exported as Gerber file and then printed by means of the PCB machine, printed and the components soldered as shown in Figure 16 below. The physical filter was then analyzed and the results documented down below in the results section.

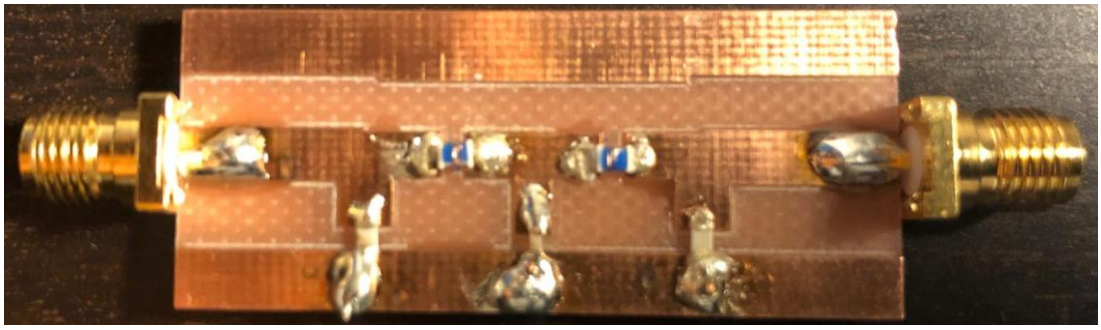

Figure 16. The printed Lumped Element Filter.

6.2 Distributed Microstrip Element Filter

The design basically involves the transformation of the lumped element filter designed above into a fully distributed element filter by means of the same AWR software. Here two designed methods were applied, the stepped impedance method and design method using stubs.

6.2.1 Stepped Impedance filters

Also known as hi-Z, low-Z filters, they employ the use of alternating sections of very high and very low characteristic impedance transmission lines. These filters are relatively

easy to implement and smaller in size, hence quite popular. The electrical performance of these filters is subpar compared with other filter implementations and as a result they are usually employed in applications where unsharp cutoffs are required. [3, 412.]

As said earlier the design employs alternating very high and very low characteristic impedance lines so the design began by transforming the lumped element circuit seen in figure 14a above into a complete microstrip line circuit by replacing the elements with lines as represented in figure 17 below. Note that the first and last lines are of characteristic impedance 50Ω and so have no particular effect, except that they needed for connectors, the length and width will be adjusted accordingly.

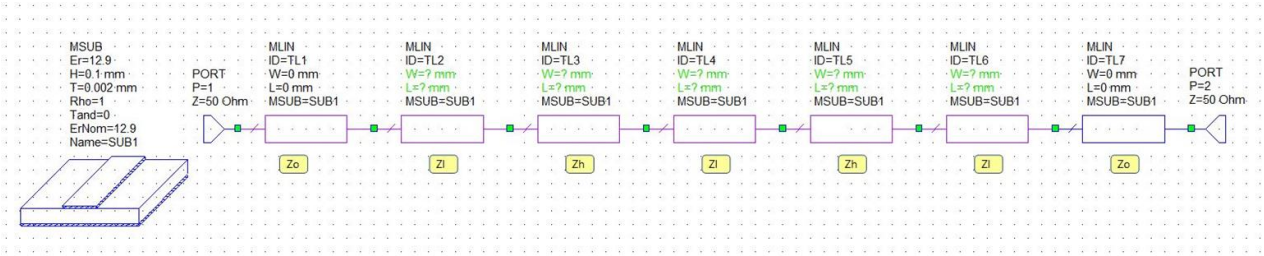

Figure 17. Complete microstrip line schematics of the Filter

The specifications for the various lines in terms of length and width was then determined by means of the equations (3), (4).

$$\beta l = \frac{L_n Z_0}{Z_h} \qquad (3)$$

$$\beta l = \frac{C_n Z_l}{Z_0} \qquad (4)$$

Where βl is the electrical length of the inductor and capacitor sections, Z_h (higher impedance) and Z_l (lower impedance) are the inductive impedance and capacitive impedance of the transmission line respectively. Z_o is the characteristic impedance of the filter, 50Ω

Then the coefficient prototype values selected from table 1 are used in this case as follows;

g_1 = 0.6180 = C1

g_2 = 1.6180 = L2

g_3 = 2.0000 = C3

g_4 = 1.6180 = L4

$g_5 = 0.6180 = C5$

Now using (3), (4) and the online microstrip calculator (https://www.emtalk.com/mscalc.php) the physical length and widths of the microstrip was calculated and tabled in table 2 below.

Table 2. The physical lengths and widths of the Microstrip lines

section	$Z = Z_l$ or $Z_h(\Omega)$	βl(deg)	W(mm)	L(mm)
1	25Ω	17.705	8.610	7.897
2	100	46.350	0.7491	22.642
3	25	57.296	8.610	25.557
4	100	46.350	0.7491	22.642
5	25	17.705	8.610	7.897

The lengths and widths obtained were then imputed into the respective section of the circuit shown in figure 17 above and the result is shown in figure 18a below. The circuit was then stimulated for a frequency response and the result also shown in figure 18b below.

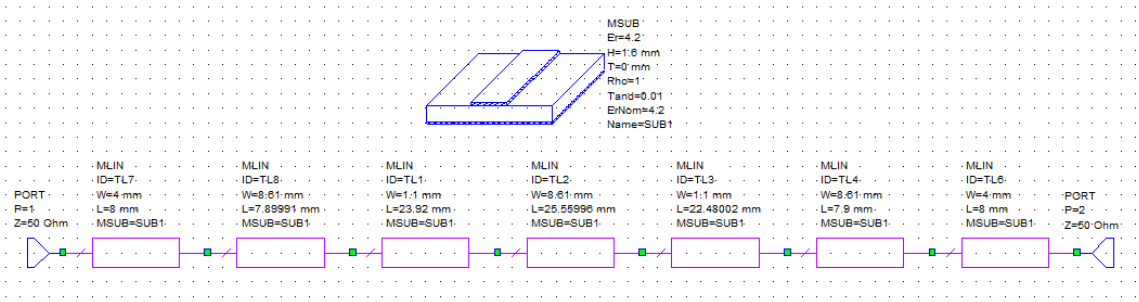

Figure 18a. Complete Micrsostrip line schematics of the Stepped Impedance Filter with the physical dimension of the lines.

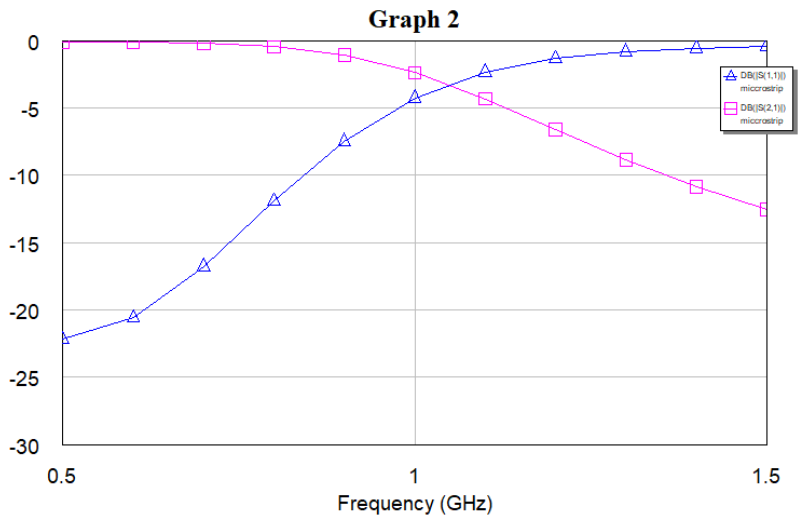

Figure 18b. Frequency response of the stepped impedance microstrip filter above.

The above circuit schematic was then translated into a layout and the result is seen below in figure 19. The layout again was exported as a Gerber file and printed by means of PCB machine into a physical filter as shown in figure 20. The filter was analyzed using the network analyzer and the results documented in the results section down below.

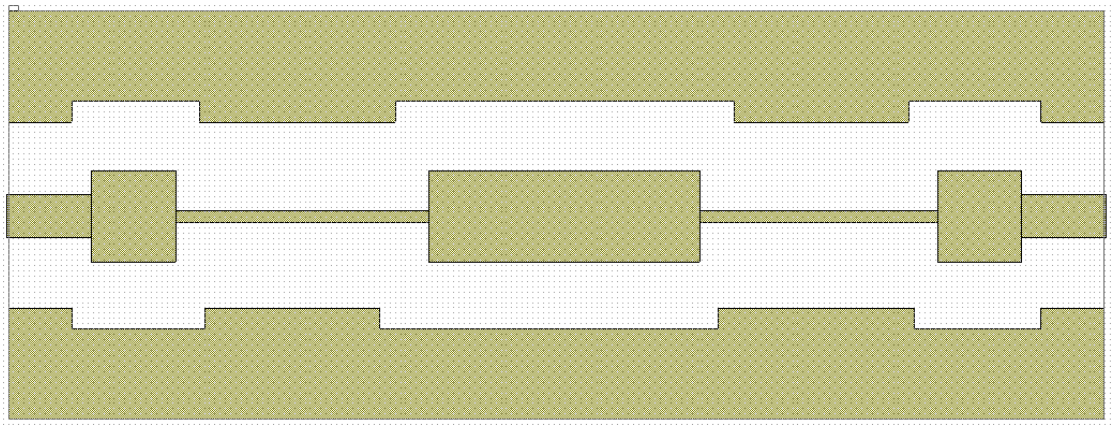

Figure 19. Layout of the Stepped impedance filter.

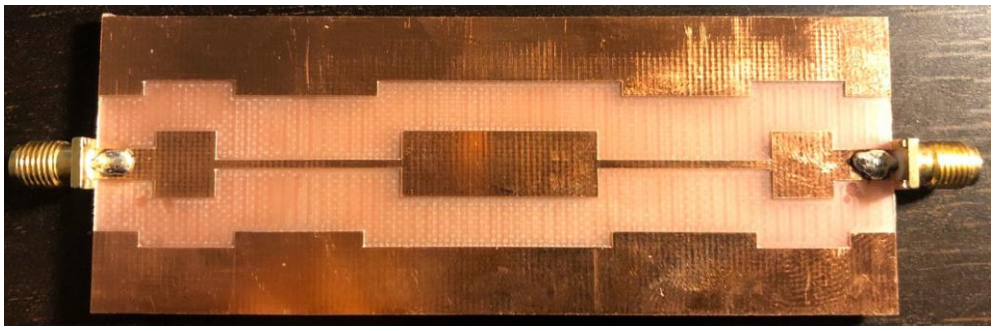

Figure 20. Printed Stepped Impedance Filter.

6.2.2 Design with Stubs

This is also a fully distributed element design which involves the use of stubs to replace components. The design goes through a series of transformations in order to arrive at the desired outcome by employing design properties such as the Richards transformation, Kuroda's identities and unit element.

Richards Transformation enables one to convert lumped elements into transmission line sections as seen in figure 21 below, i.e. an inductor transforms into a short-circuited stub while a capacitor transforms into an open-circuited stub. Note that the length of the stubs is λ/8 at cut-off frequency. [3, 406-407]

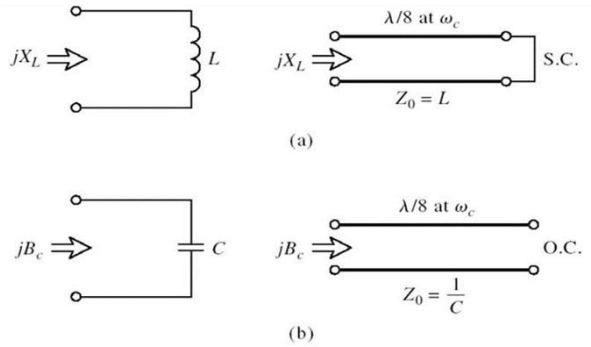

Figure 21. Richards Transformation. [3, 407]

The ***unit elements*** and ***Kuroda's identities*** work together to make the transformation realizable, the unit elements help to spatially separate the transmission line elements, while Kuroda's identities enables one to transform series stubs into shunt stubs or vice versa in order to realize practically possible configurations. In figure 22 below we see various transformations possible with unit elements and Kuroda Identities, note that $n^2 = Z_2/Z_1$. [3,406-407; 1, 243]

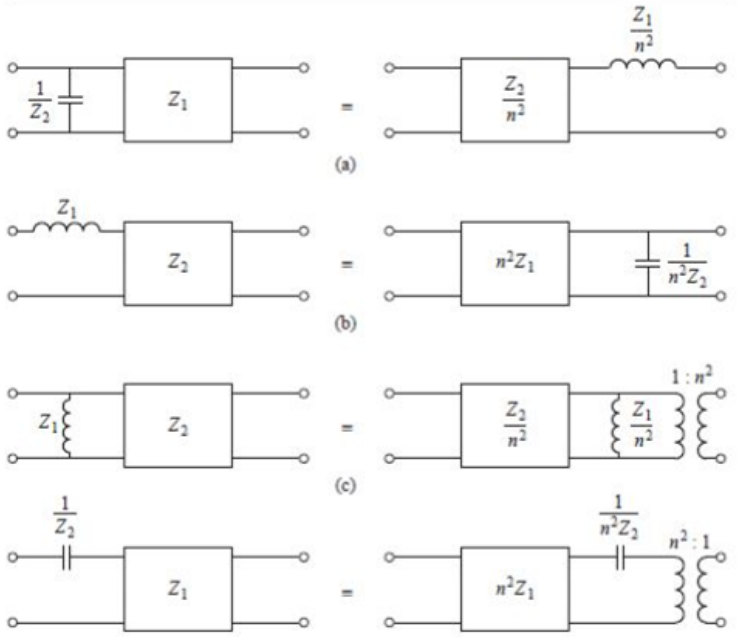

Figure 22. The four Kuroda identities. [3, 407]

Now with this knowledge in mind the design began again by selecting coefficient prototype values from table 1 as done earlier;

g_1 = 0.6180 = C1

g_2 = 1.6180 = L2

g_3 = 2.0000 = C3

g_4 = 1.6180 = L4

g_5 = 0.6180 = C5

Using Richards transformation and Kuroda's identities, the lumped element circuit in figure 13a above was converted into a practically realizable circuit as shown step by step in figures 23-27 below.

I. Firstly, by means of Richards transformation inductors and capacitors were transformed into short circuit series stub and open circuit shunt stubs respectively.

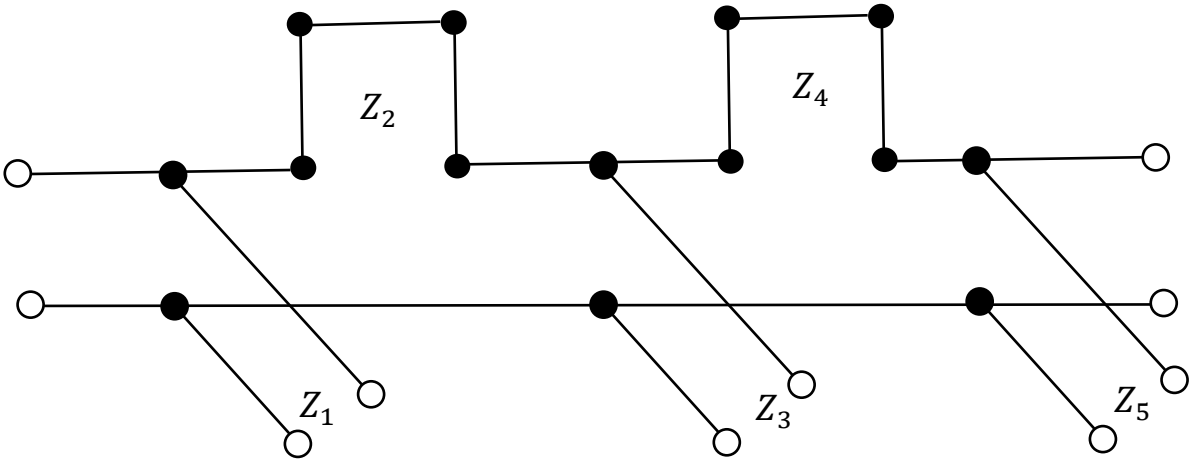

Figure 23. Transformed inductors and capacitors to short circuit series stubs and open circuit shunt stubs.

Note that;

$$Z_1 = Z_5 = \frac{1}{0.6180} = 1.6181$$
$$Z_3 = \frac{1}{2} = 0.5$$
$$Z_2 = Z_4 = 1.6180$$

II. Unit Elements were then introduced as seen in figure 24 below,

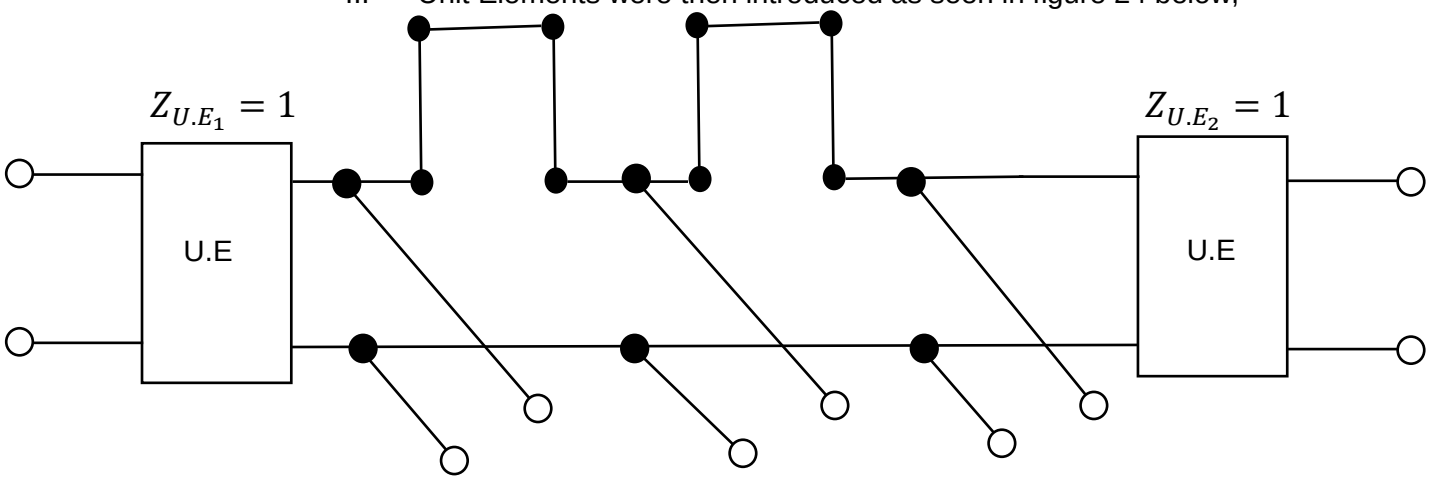

Figure 24. Addition of the first set of unit elements.

III. By means of Kuroda's 2nd identity shunt stubs were converted into series stubs as shown in figure 25 below.

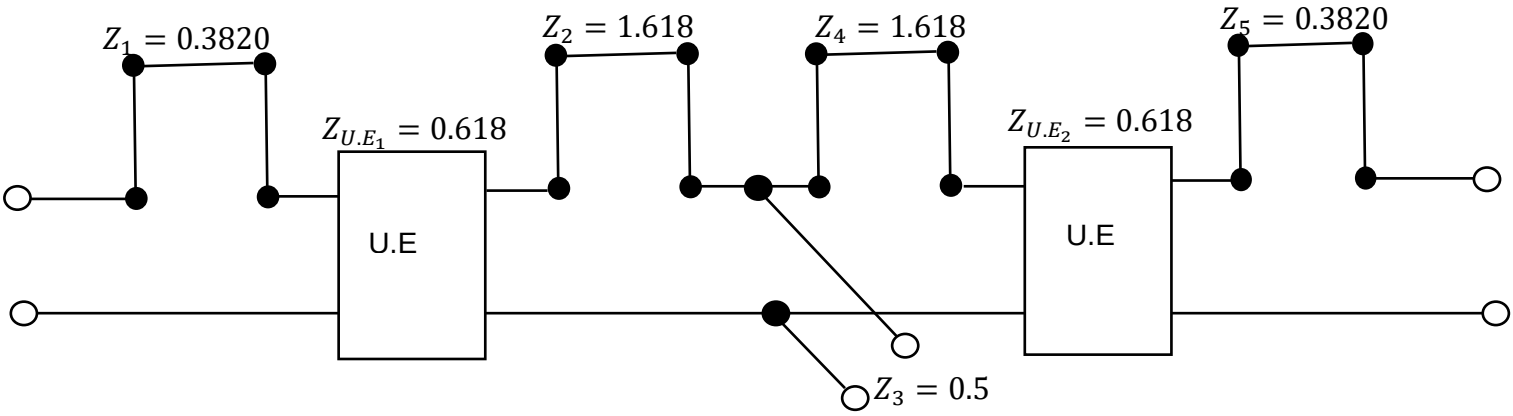

Figure 25. Conversion of shunt stubs into series stubs

IV. Two new set of Unit Elements we introduced at the input and output of the schematic as soon in figure 26 below.

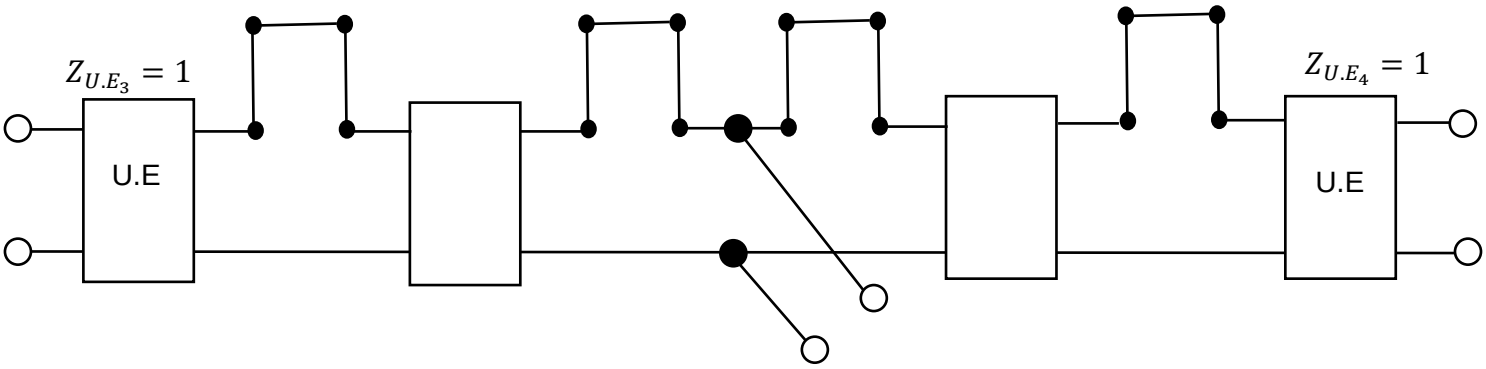

Figure 26. Addition of two new unit elements, $U.E_3$ and $U.E_4$.

V. For a realizable filter, Kuroda's First identity was used to convert the series stubs into shunt stubs as shown below in figure 27.

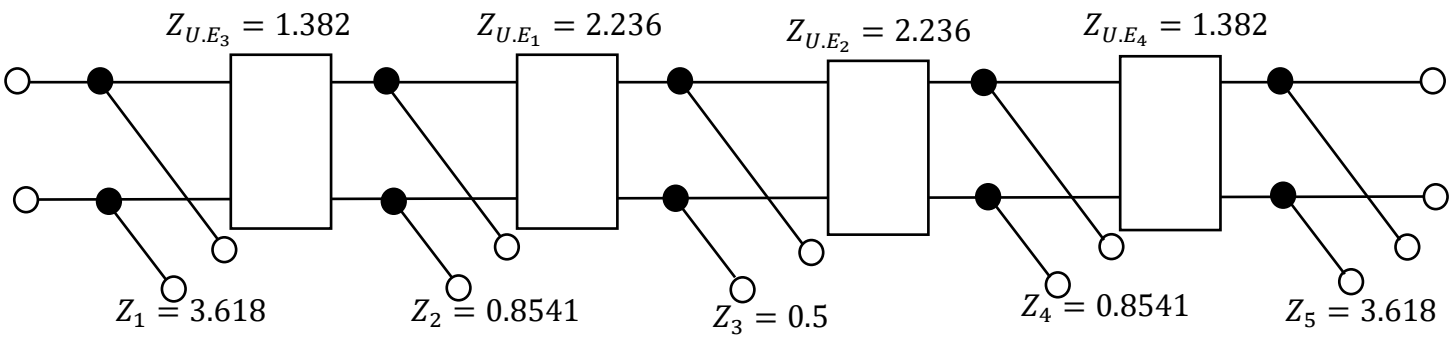

Figure 27. Conversion of series stubs into shunt stubs.

The impedances from figure 27 were then de-normalized as follows

$$Z_1 = Z_5 = 3.818*50\Omega = 180.9\Omega$$

$$Z_2 = 0.5*50\Omega = 25\Omega$$

$$Z_2 = Z_4 = 0.8541*50 = 42.705\Omega$$

$$Z_{UE1} = Z_{UE2} = 2.236*50\Omega = 111.8\Omega$$

$$Z_{UE3} = Z_{UE4} = 1.382*50\Omega = 69.1\Omega$$

Using the de-normalized impedances and length, λ/8 as noted earlier, the physical widths and lengths of the stubs were calculated using the online microstrip calculator (https://www.emtalk.com/mscalc.php).The practical filter circuit shown in figure 27 above was then translated into a microstrip filter circuit, optimised and stimulated for desired frequency response as shown in figure 28a and 29b below.

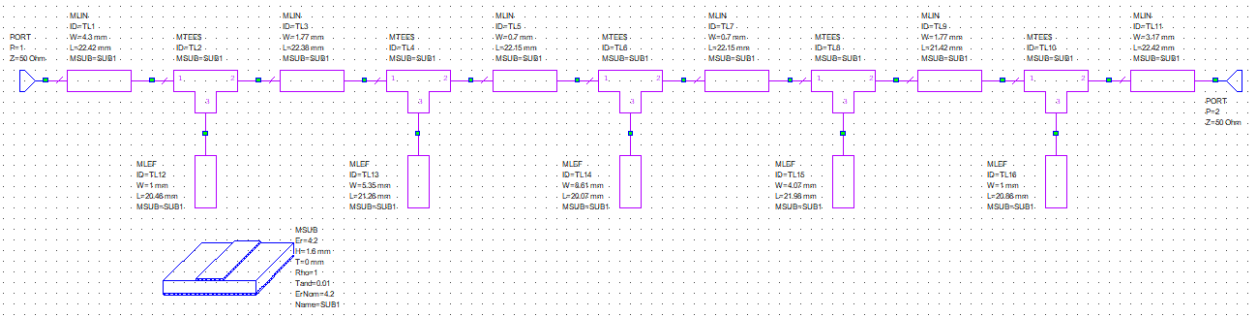

Figure 28a, Microstrip circuit of realizable Stub filter circuit.

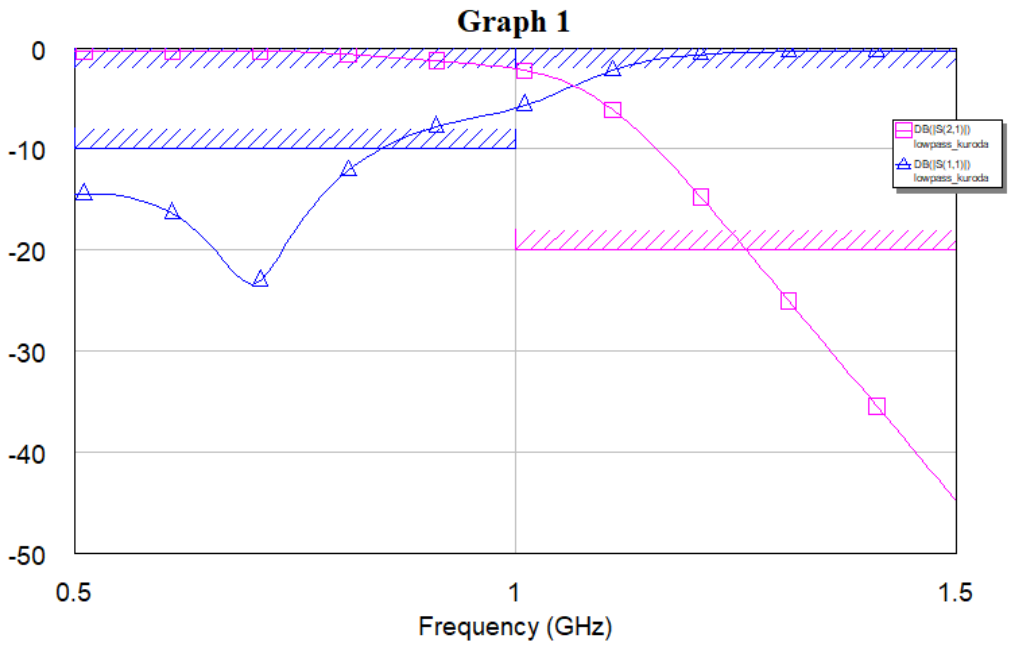

Figure 28b, Frequency response of the stub filter

The logic circuit of the filter was then translated into a printable filter layout as shown in figure 29. Figure 30 shows the printed layout. The filter was then measured and the results documented in the results section below.

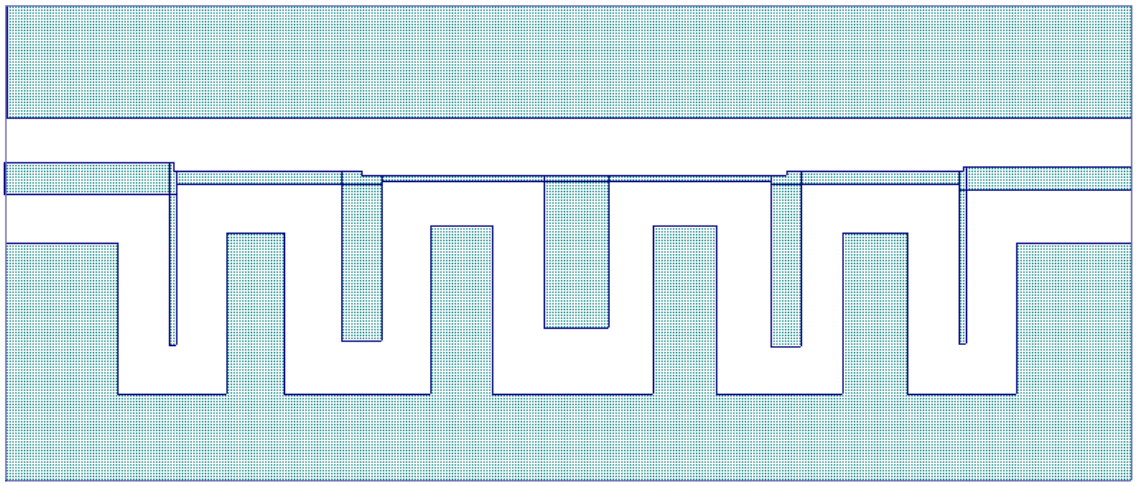

Figure 29. Stub Filter layout.

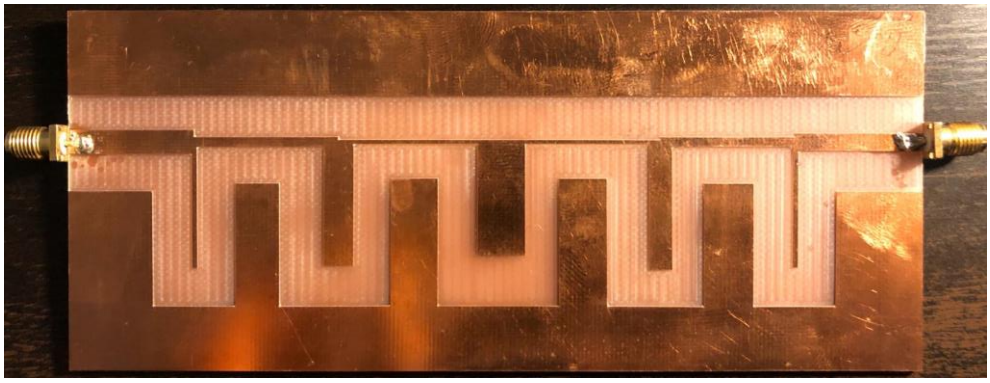

Figure 30. Printed Stub Filter

6 Filter measurement and analysis

Using the HP RF network analyzer the transmission frequency response of the filters were measured and analyzed. The measurement was done with the frequency range of 100MHz – 2100MHz.

In figure 31 below we see the frequency response of the lumped element filter, where at approximately -3dB the cut-off frequency indicated by the Marker one is 1054.66MHz, which is not too far from the ideal 1GHz but as explained earlier one cannot expect and ideal response.

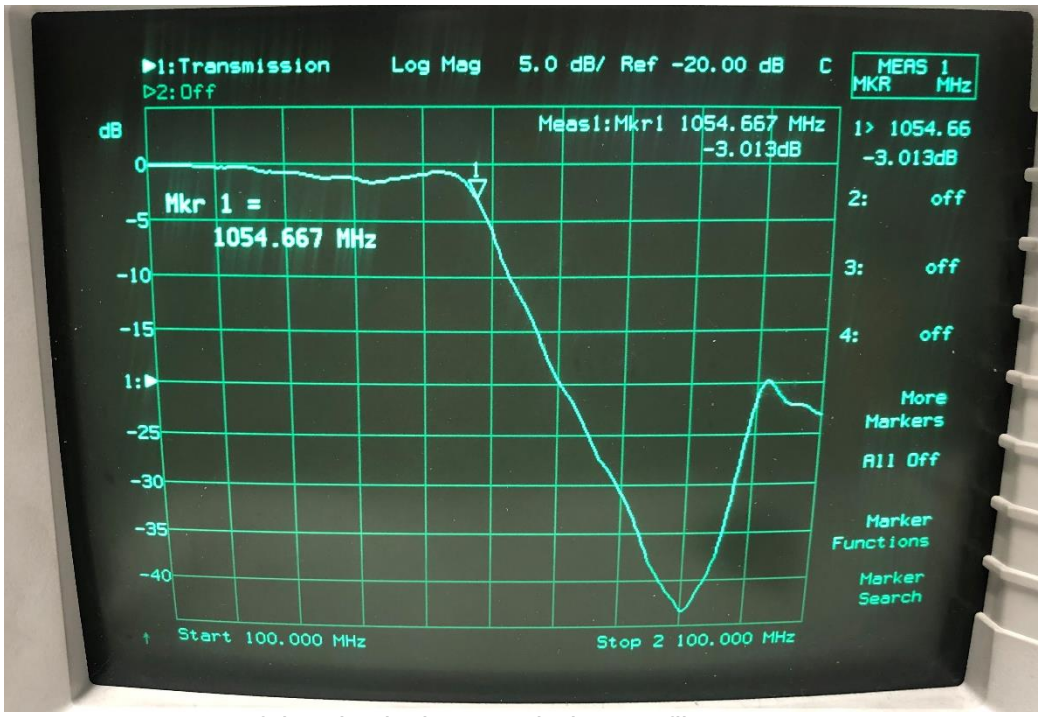

Figure 31. Frequency of the physical Lumped Element filter

In figure 32 below is the response of the step impedance filter with cut off frequency of 901.33MHz at approximately -3dB marked by Maker 2. Also present is couple unexpected dips particularly the dip marked one.

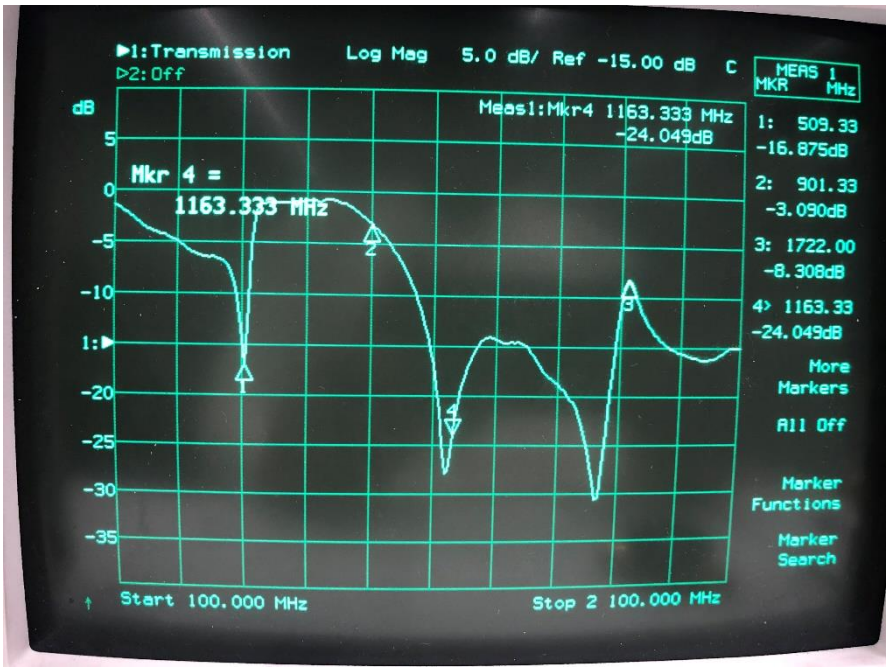

Figure 32. Frequency of the physical Stepped Impedance filter

In figure 33 below represent the measured frequency response of the stub filter, whose cut-off frequency is 909.33MHz at approximately -3dB denoted by marker 3. This particular filter exhibited numerous undesired dips, a very irregular response.

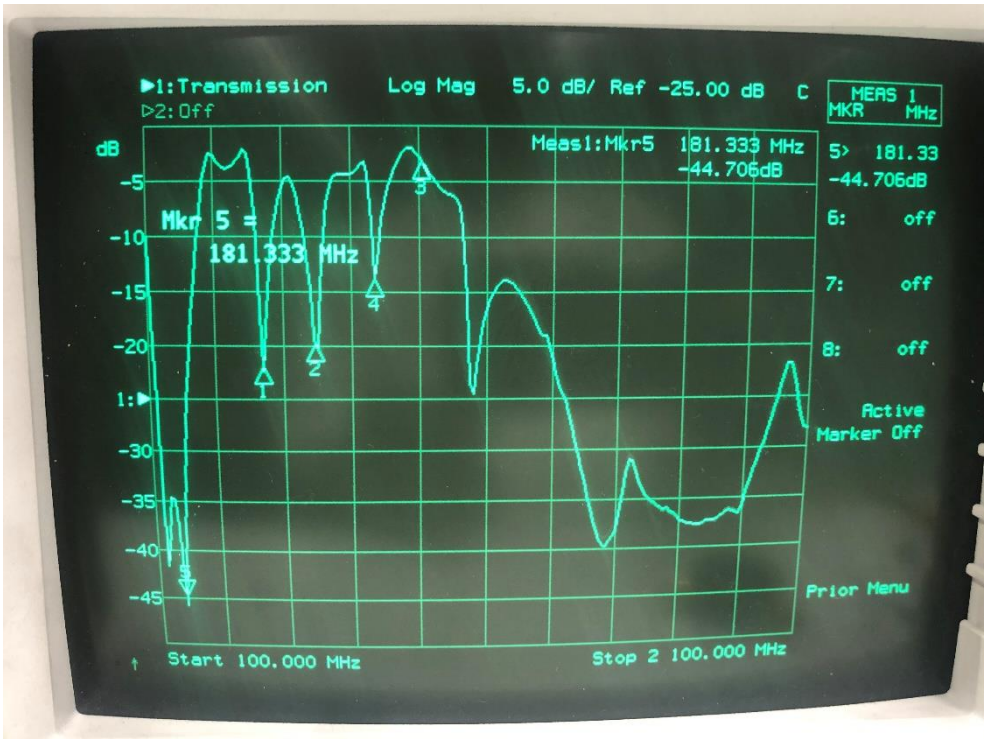

Figure 33. Frequency of the realized Stub Filter

7 Conclusion

The results obtained was not as expected. The Lumped element filter which was expected to exhibit much distortions but unexpectedly exhibited an accurate response, while the other two filters showed substantial distortions and irregularities. It is uncertain as to what caused those grave distortions particularly in the Stub Design filter. A plausible reason is that the cut-off frequency is perhaps too small.

Theory tells us that at high frequency lumped elements are compromised but in this case of an operating cut-off frequency of 1GHz the lumped element filter operated quite well, perhaps in this case 1GHz was not necessarily high. The measured response of the Lumped Element filter compared to the stimulated response of the same filter was relatively better. In the stimulated response we see a relatively wider transition band and lower cut-off frequency.

All in all the Lumped element filter performed the best, the stepped impedance filter performed relatively poor while the Stub element filter performed the poorest. The design and printing is absolutely possible with the tools available in school.

References

1 Ludwig R, Bretchko P. RF Circuit Design: theory and applications. New Jersey: Prentice-Hall; 2000.

2 Introduction to reconfigurable Microstrip filters. Chennai: Anna University. Available from: http://shodhganga.inflibnet.ac.in:8080/jspui/bitstream/10603/253258/7/07_chapter1.pdf

3 Pozar M.D. Microwave Engineering. 3rd ed. New Jersey: John Wiley and Sons, Inc.; 2005.

4 Introduction to Analog filters. Benha: Benha University. Available from: http://www.bu.edu.eg/portal/uploads/Engineering,%20Shoubra/Electrical%20Engineering/2460/crs12137/Files/SigSys-%20Lect%2009%20-%20Introduction%20to%20Filters.pdf

5 Electronics Tutorials: Passive Low Pass Filter.[online] Available from: https://www.electronics-tutorials.ws/filter/filter_2.html [Accessed 6 November 2019]

6 Electronics Tutorials: Passive High Pass Filter.[online] Available from: https://www.electronics-tutorials.ws/filter/filter_3.html [Accessed 6 November 2019]

7 Electronics Tutorials: Passive Band Pass Filter.[online] Available from: https://www.electronics-tutorials.ws/filter/filter_4.html [Accessed 6 November 2019]

8 Heath J. Basics of Band Pass Filters. [24 May 2017]. [online] Available from: https://www.analogictips.com/basics-of-bandpass-filters/[Accessed 6 November 2019]

9 Electronics Tutorials: Active Band Stop Filter.[online] Available from: https://www.electronics-tutorials.ws/filter/band-stop-filter.html [Accessed 7 November 2019]

10 Electronics Tutorials: Butterworth Filter Design.[online] Available from: https://www.electronics-tutorials.ws/filter/filter_8.html [Accessed 9 November 2019]

11 Butterworth filter. Available from: https://en.wikipedia.org/wiki/Butterworth_filter[Accessed 9 November 2019]

12 Chebyshev Filter. [online] Available from: https://en.wikipedia.org/wiki/Chebyshev_filter[Accessed 9 November 2019]

13 Classic Filters. Rhode Island: University of Rhode Island. [online] Available from: https://www.ele.uri.edu/courses/ele314/handouts/YS06_Classicfilters.pdf [Accessed 11 November 2019]

14 Elliptic Filter. [online] Available from: https://en.wikipedia.org/wiki/Elliptic_filter[Accessed 11 November 2019]

15 Bessel Filter. [online] Available from: https://en.wikipedia.org/wiki/Bessel_filter[Accessed 11 November 2019]

16 Lumped Element Model. [online] Available from: https://en.wikipedia.org/wiki/Lumped-element_model[Accessed 13 November 2019]

17 What does Lumped element mean? [online] Available from: https://electronics.stackexchange.com/questions/131646/what-does-lumped-element-mean[Accessed 13 November 2019]

18 Microstrip. [online] Available from: https://en.wikipedia.org/wiki/Microstrip[Accessed 15 November 2019]

19 Bahl I.J, Trivedi D.K. A Designer's Guide to Microstrip Line. May 1977. [online] Available from: http://www.ece.ualberta.ca/~rambabu/EE470/class26s.pdf [Accessed 15 November 2019]

20 Ali M.F. Estimate Microstrip Substrate Relative Dielectric Constant. 11 December 2007. [online] Available from: https://www.mwrf.com/components/estimate-microstrip-substrate-relative-dielectric-constant [Accessed 15 November 2019]

21 Distributed Element Filter. [online] Available from: [online] Available from: https://www.wikiwand.com/en/Distributed-element_filter [Accessed 10 December 2019

Creating the Gerber files for printing.

Once the Layout is complete, create the Gerber files for export.

1. First create an outline for the layout. Go to ***Options*** ➡ ***Layout Options*****.** From the layout options menu find ***Paths*** and make sure the ***paths width*** is small enough then click OK. Now go to ***Draw*** ➡ ***Path*** and then draw the outline around the layout.

2. In the layout manager menu, double click on the layer setup file to open the ***Drawing Layer Options*** menu. Right click on the ***File Export Mappings New Gerber*** ➡ ***File Export Mapping***. ***FileMap*** is then created. Select the created ***FileMap*** and make sure to ***check*** all the needed layers and ***uncheck*** the ones not needed.

3. Now go to ***Scripts*** ➡ ***Layout*** ➡ ***Export_PCB_Drill_Gerber.*** From the drop down ***Export Control***, in the drill section select the right drill option, in this case select ***Use drill holes***. In the Gerber section make sure ***Filemap*** is selected, choose your desired destination and then ***OK***.

4. The Gerber file is then exported to your desired location. In creating the CAM files for printing, remember to select Rubout option for removing all unnecessary copper.