NOVIA
UNIVERSITY OF APPLIED SCIENCES

Wolffskavägen 33
65200 VASA
FINLAND
Phone: (06) 328 5000
Fax: (06) 328 5110

GREEN MILLS

Visual Demo Kit

EPS- Green Mills Project
Autumn Semester 2010

Eva Adell | Guillermo Moreno | Sofia Nordlund | Jiayuan Li

Table of contents

Chapter	Part	Section	Page
		Table of contents	2
		Abstract	4
1		Introduction	5
	1.1	Mission	5
	1.2	Definition of the project	5
2		Project organization and participants	7
	2.1	Milestones	7
	2.2	Project members	8
	2.2.1	EPS project support personnel	8
	2.2.2	Green Mills project team members	9
	2.3	Responsibilities in the team	10
3		Background information	11
4		Field study	15
	4.1	Questionnaire	15
	4.2	Answers	16
5		The demo box	17
	5.1	Design requisites and specifications	17
	5.2	Detailed description of the selected solution	17
	5.3	Description of the product	18
	5.4	Characteristics and materials	19
	5.5	Manufacturing process	20
	5.6	Assembly	23
	5.7	Tools	24
6		Module 1: Wind energy	25
	6.1	Design requisites	25
	6.2	Description of the product	25
	6.3	Characteristics and materials	27
	6.4	Manufacturing process	28
	6.5	Assembly	31
7		Module 2: Solar and heating energy	32
	7.1	Design requisites	32
	7.2	Description of the product	32
	7.3	Manufacturing process	33
	7.4	Assembly	34

8		Module 3: Save energy	35
	8.1	Design requisites	35
	8.2	Description of the product	35
	8.3	Characteristics and materials	36
	8.4	Manufacturing process	36
	8.5	Assembly	38
9		Module 4: Energy game	38
	9.1	Design requisites	39
	9.2	Description of the product	40
	9.3	Characteristics and materials	41
	9.4	Manufacturing process	41
	9.5	Assembly	43
10		Module 5: Information	44
	10.1	Design requisites	44
	10.2	Description of the product	44
	10.3	Manufacturing process	44
	10.4	Assembly	46
11		Website	47
	11.1	The aim of the website	47
	11.2	Website usability analysis	47
	11.3	Design style and structure	48
	11.4	Technology and site map	48
12		Appendixes	50
	12.1	Planning of the project	50
	12.2	Pert	52
	12.3	Gant	53
	12.4	Risk evaluation	55
	12.5	Schedules	57
	12.6	Minutes of meeting	59
	12.7	Field study	62
	12.8	Sketches	66
	12.8.1	The demo box	66
	12.8.2	Module 1: Wind energy	91
	12.8.3	Module 2: Solar and heating energy	99
	12.8.4	Module 3: Save energy	100
	12.8.5	Module 4: Energy game	106
	12.8.6	Module 5: Information	109

Abstract

This document is a report about a project carried out under the EPS in Novia University of Applied Sciences in the autumn semester of 2010. The main objective of the project tasks was to plan, design and manufacture a prototype of a visual demo kit. The kit is intended for education about renewable energy to kids within the age span 6-13 years.

The first tasks included conceptual planning of the entire time span for the project and research about renewable energies to be combined with a field study among kids in local schools. The second stage included creating the design of the box as well as finding suitable solutions for the manufacturing process. The wooden parts were made in cooperation with the vocational school Yrkesakademin's carpenter study program, while the plastic parts were made in Technobotnia's workshop by the team together with a supervising teacher. The second stage also included the creating, programming and designing of a website for the project. In the final stage, the electrical circuits, the assembly and the decoration of all the parts of the kit was made, along with this project documentation.

The kit will take the form of a box, no bigger than its handling is manageable for one instructor, and will mainly be constructed out of plywood and plastic. The box is folded out into five different squares, each one containing a module with information about a specific type of renewable energy. In an integrating and visual way the kids will be able to see and hopefully get a deeper understanding for the different energies. The project team decided to focus on wind and solar power, light bulbs with different efficiencies and other practical ways of saving energy as well as using renewable energy types.

1. Introduction

EPS is a project semester arranged in Vasa by Novia University of Applied Sciences. EPS is a possibility for students from different European countries to participate in a project based semester, in their own home country or in another European country. This autumn there are two project teams attending EPS at Novia in Vasa.

Participating in a project team consisting of individuals from different nations gives each student a unique chance to require firsthand knowledge and insight about how it is to work in an international project team. The project teams are given a start date and a deadline in the end of the semester, and have to plan their work for the said amount of time as well as cooperate and try to successfully achieve their set goals.

1.1 Mission

The mission for the participants in project team Green Mills is to accomplish the set goals in the planned time and to obtain valuable experiences from the team work at hand. While doing so the team members will also learn about working together in an international team environment and how to overcome possible obstacles caused by cultural differences and such. By the end of the project semester, Green Mills project team should have a complete prototype to show, along with all the necessary paper work.

1.2 Definition of the project

Green Mills' project is requested by the Research and Development department at Novia University of Applied Sciences. The main goal of the project is for the team to plan, design and construct a prototype of a visual demonstration kit, relating to energy and suitable for educating youngsters within the age span 6-12 years.

The team members decided to concentrate on renewable energies and ways of saving energy. It was decided the project members also conduct a field study among mainly local schools, to get a better view of the level of the youngsters' current knowledge about renewable energies. Furthermore, the demonstration kit will take the shape of a

box where each side can be lowered down. Each side, including the bottom side of the box, contains a module dealing with a type of renewable energy or a way of saving energy. The box will be no bigger than that one person can handle it by themselves. As for the materials for the box, the team decided to make the box itself in plywood and most of the parts for the modules in plastic. Some electrical circuits and smaller appliances will also be requested to make the most out of the planned design. The box will be painted in a suitable color and contain the logotypes of the sponsors: Novia and EPS.

2. Project organization and participants

2.1 Milestones

1st of September, 2010 – the EPS semester begins.

6th of September, 2010 – the EPS Green Mills project is started.

The team consisted of three members; Sofia Nordlund, Eva Adell and Guillermo Moreno along with the support personnel; Kaj Lindedahl, Iddrisu Abubakari, Roger Nylund and Niklas Frände. Eva Adell was elected project manager.

22nd of October, 2010 – Jiayuan Li joins the team.

9th of November, 2010 – Guillermo Moreno takes over as Project Manager.

10th of November, 2010 – Mid Term evaluation for the EPS teams.

10th of December, 2010 – The final documentation is handed in to the supervisors.

16th of December, 2010 – The final presentation of the project is held by the team.

17th of December, 2010 – The graduation papers and grades are handed out.

2.2 Project members

2.2.1 EPS project support personnel

SUPERVISOR:

Iddrisu Abubakari

e-mail: *iddrisu.abubakari@novia.fi*

SUPPORT PERSONNEL:

Niklas Frände

e-mail: *niklas.frande@novia.fi*

MANAGING DIRECTOR:

Kaj Lindedahl

e-mail: *kaj.lindedahl@novia.fi*

EPS CONTACT PERSON:

Roger Nylund

e-mail: *roger.nylund@novia.fi*

2.2.2 Green Mills project team members

Eva Adell	Nationality: Spanish University: Polytechnic University of Valencia Field of study: Industrial Design (Master's) e-mail: evaadell@msn.com
Sofia Nordlund	Nationality: Finnish University: Novia University of Applied Sciences Field of study: Industrial Engineering and Management (Bachelor's) e-mail: sofia.nordlund@novia.fi
Guillermo Moreno	Nationality: Spanish University: Polytechnic University of Catalonia Field of study: Mechanical Engineering (Bachelor's) e-mail: guillermo.moreno222@gmail.com
Jiayuan Li	Nationality: Chinese University: Novia University of Applied Sciences Field of study: Information Technology (Bachelor's) e-mail: jiayuan.li@novia.fi

2.3 Responsibilities in the team

Eva Adell	Project Manager (1st half of the semester); Project report; Planning; Design, including measurements and dimensions.
Sofia Nordlund	Secretary; Project report; Field study; Translations of descriptions and other paper work.
Guillermo Moreno	Project Manager (2nd half of the semester); Planning; Design, including measurements and dimensions; Mechanical features in the demo box; Project report.
Jiayuan Li	Webpage; Project Report.
Kaj Lindedahl	EPS Project Managing Director; Oversees the development of the project and gives feedback and directions to the project team.
Iddrisu Abubakari	Supervisor for EPS Green Mills' project work; Gets feedback and supply ideas, directions and support for the whole team.
Niklas Frände	Support and ideas for the whole team.

3. Background and information

Before the team started planning for the actual project, the members Eva Adell and Guillermo Moreno searched for information about the different types of renewable energies. Renewable energy is an energy which comes from natural resources, such as: sunlight, wind, rain, tides and from within the earth. Renewable energy is derived from natural processes which are replenished constantly. In its various forms, it derives directly from the sun, or from heat generated deep within the earth. Included in the definition is electricity and heat generated from the sun, the wind, the ocean, hydropower, biomass, geothermal resources, bio fuels and hydrogen derived from renewable resources. The different types of renewable energies that will be presented in this report are: wind energy, solar energy, geothermal energy, biomass energy and hydraulic energy.

3.1 Wind energy

Wind energy is the energy from the wind, i.e. the kinetic energy generated by the effect of air currents. This energy is then transformed into other, for human activities, useful forms. Today wind energy is mainly used for producing electricity through wind turbines. Wind energy is an abundant, renewable, clean energy which can help reduce emissions of greenhouse gases from power plants since it can replace fossil fuel-based power plants. This makes wind energy a kind of green energy.

Picture 1. Wind turbines

Source: http://cleantechnica.com/category/alternative-energy/wind-energy/

3.2 Solar energy

Solar energy is the energy produced by the sun. It is converted to useful energy and used either to produce electricity or to heat something. This renewable energy is primarily divided into two types; solar thermal energy and photovoltaic energy. The former is mainly used for heating things like food or water, while the latter mainly generates electricity.

The main equipments used for retrieving solar thermal energy are the water heaters and solar stoves. To generate electricity solar cells are used. They are the soul of what is known as solar panels, which are used transforming the energy radiating from the sun into electrical energy. The uses of solar energy are not limited to those mentioned here, but these two utilities are the most important. Other uses of solar energy are:

- Solar ovens
- Drying
- Evaporation
- Distillation
- Cooling

Picture 2. Solar panels

Source: http://www.motordehidrogeno.net/tag/energia-solar

3.3 Geothermal energy

Geothermal Energy is energy that can be obtained by man through the use of heat inside the Earth. Geothermal energy is obtained by extracting the Earth's internal heat or heat input into the Earth. Hot water or steam can flow naturally, by pumping or pulsed flow of water and steam (flashing). The method chosen depends in each case is economically viable.

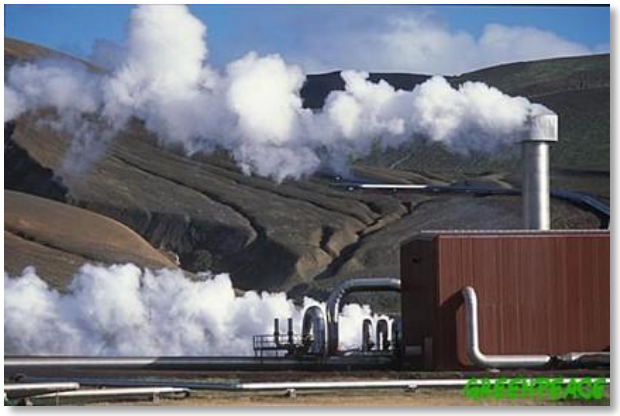

Picture 3.3. Geothermal energy power plant

Source: https://duncanscience9.wikispaces.com/Geothermal+Energy

3.4 Energy from biomass

Energy retrieved from biomass is considered a renewable energy source, since it's biological material from living or recently living organisms such as; wood, waste, (hydrogen) gas, and alcohol fuels. Biomass is commonly plant matter grown to generate electricity or produce heat. In this sense living biomass can also be included, since plants also can generate electricity while they're still alive.

The most conventional way in which biomass is used still relies on direct incineration. Forest residues, for example dead trees, branches and tree stumps along with yard clippings, wood chips and garbage are often used for incineration. However, biomass also includes plant or animal matter used for production of fibers or chemicals. Biomass may also in-clude biodegradable waste that can be burnt as fuel. Excluded are organic materials such as fossil fuels, which have been transformed by geological processes into substances, such as coal or petroleum.

Industrial biomass can be grown from numerous types of plants including hemp, corn and a variety of tree species ranging from eucalyptus to oil palm. The particular plant used is usually not important considering the end product, but it does affect the processing of the raw material.

Although fossil fuels have their origin in ancient biomass, they are not considered biomass by the generally accepted definition because they contain carbon that has been "out" of the carbon cycle for a very long time. Their combustion therefore disturbs the carbon dioxide content in the atmosphere.

3.5 Hydraulic energy

Hydraulic energy is the power that can be derived from the force or energy of moving water. This may be harnessed for useful purposes. Prior to the widespread availability of commercial electric power, hydropower was used for irrigation and operation of various machines such as watermills, textile machines, sawmills, dock cranes and domestic lifts. Another method used was a tromped to produce compressed air from falling water, which could then be used to power other machinery at a distance from the water.

In hydrology, hydropower is manifested in the force of the water on the riverbed and banks of a river. It is particularly powerful when the river is in flood. The force of the water results in the removal of sediment and other materials from the riverbed and banks of the river, causing erosion and other alterations.

Picture 4. Water Dam

Source: http://www.mcq.org/code/en/objects/dam-25.html

4. Field study

Acknowledging the fact that the youngsters knowledgebase about renewable energies would probably be quite different depending on their educational environment, home conditions, age and interests, the team decided to conduct some kind of field study to get a better insight as to how well the youngsters knowledge and assumptions about renewable energies and ways of saving energy corresponded to reality.

The field study was made for teachers in preliminary schools, giving them the freedom to decide how they brought up the questions in class by themselves, as long as they compiled the most important thoughts and discussions the kids came up with. This since none of the team members had any previous knowledge about pedagogies and teaching methods. The field study consists of a questionnaire with eight questions, containing the correct answers within parenthesis for questions were single, correct answers can be given. Some questions were merely discussion based. Two preliminary schools participated, with a total of almost 200 participating pupils. They are Vasa Övningsskola in Vasa and Molpe Skola in the village of Molpe.

4.1 Questionnaire

The questionnaire was first made in Swedish by Sofia Nordlund (later SN), since she was the only team member from Finland and therefore had the required language skills. Her mother tongue is Swedish which, naturally, made the team put her in charge of all translations from English to Swedish or the other way around, as well as contact to locals where Swedish might facilitate the process, making the questionnaire and compiling the answers. The other reason for putting her in charge of the field study was that her studies at Novia University consist in great part of marketing and similar subjects.

The questionnaire was, after having had contact with the schools in question, sent by e-mail. The teachers were then responsible for bringing up the questions for discussions in the classes, compiling the answers and returning these to SN either by e-

mail or by mail. SN then translated both the questionnaire and the answers, compiled the answers from all participants and presented these to the rest of the project team.

4.2 Answers

After receiving the answers from each class in each school, SN started compiling them all together and translating them to English to be able to present them to the rest of the project members. Green Mills' team members all agreed that the answers were quite close to what had been expected. The younger pupils had less concrete knowledge about renewable energies and the meaning of energy in general, while the older pupils already had quite a good knowledge base. In general this was very similar regardless of if the pupils were linig in a city or in a rural area.

Judging from the answers of the field study, the team needed to take in to consideration the level of difficulty the design as well as the construction of the demo box and its modules could have. Since the goal is to use the demo box for educational purposes and aiming at pupils in preliminary schools in the ages 6-10 years, the design, construction and purpose of the module parts need to be easy to understand and mostly consist of visual and concrete items for the youngsters. Since children in general learn a lot from playing with things they can look at and touch, many of the parts in the box are made for this purpose, e.g. there is one module consisting of a game with different pieces to be put together in the correct order and another module have a wind turbine you can put together by yourself. All in all, the field study showed the project members that what they already suspected they needed to take in to consideration was true. The field study was a good way to confirm what needed to be included in the planning and design of things.

5. The Demo Box

5.1 Design requisites and specifications

The design requirements are mainly focusing on the box´s level of interactivity and the degree of difficulty for transportation of the box. The box should as far as possible facilitate interactive parts which in return will be the main learning instruments. Furthermore, the box itself needs to be easy enough to be carried by one person. Therefore the weight limitation was set at 15 kilograms *(calculations of the weight of the box in page 88)* while the dimension shall be limited to a maximum length and height of one meter.

To fulfill the interactivity, the team thought it best to make the box consist of modules, which can be separated from the box and each other in order to facilitate the use of the product and make it easier for the users. There will be at least four different modules in the box, one for each vertical side of the box. Each one of the modules will have a theme of its own, however, all regarding to renewable energy or ways of saving energy.

5.2 Detailed description of selected solution

To meet the design requirements proposed, it was decided that the box should contain five different modules, each one representing a different type of renewable energy or ways of saving energy through various games and simple explanations.

In order to achieve the interactivity between the contents and the users the team decided to design a cube-shaped box where each side can be lowered down, by hand, into a horizontal level with the ground after removing the lid of the box. When all the sides are in horizontal position you can see the five different modules, one on each side of the box, plus one in the centre of the box. All the modules are removable, allowing the user to separate them from the box and use them as individual parts.

To comply with the specification that it should be easy to transport the kit, the team proposed to design the box with wheels at its base, so that the user does not have to carry it at all times. Furthermore, the design includes a handle on top of the lid for lifting of the box as well as removal of the lid. The design also includes two handles on opposite sides of the box for the purpose of carrying the box.

5.3 Description of the product

The final design of the box also includes the dimensions. The height was set at 600 mm, while the base is a 500x500 mm square. The reason for the additional 100 mm in height is the drawer which will be placed in the bottom of the box for putting e.g. spare parts and storing more sensitive objects included in the contents. At the base of the box, four wheels will be bolted. The wheels will have a turning ability of 180 degrees to facilitate transportation.

The sides of the box are folded by so called piano hinges, whose opening angle is 180 degrees. Since the sides are too heavy to be held in horizontal position only by hinges, the team together with carpenter Kenneth Julin decided to use another method. This means including small wooden triangles at each side of the box, below the moving part, that will be acting as support for the sides.

The final design for the contents of the modules turned one module into a compartment for the instructions in English, Swedish and Finnish for the other four modules. The instructions are made so that both teachers and at least the older children can understand what the purpose with each module is.

To keep the box intact while closed, the design places an upper lid which stretches down a bit over the sides, helping to keep them together vertically. In other words, the sealed box keeps the sides vertical with the help of the lid and four latches, one on each side, bolted to the top. The latches can easily be opened, allowing the user to remove the lid and lower the sides down. As mentioned before, the lid also has a handle for lifting.

5.4 Characteristics and materials

The box will be manufactured in plywood, ranging from the thickness of 9 mm to 12 mm depending on the end use of the part in question. The design, including complete sketches in AutoCAD, is made by the team, while the manufacturing will be made by carpenter Kenneth Julin's students at the vocational school Yrkesakademin's carpenter study programme.

Plywood is a type of manufactured wood made from thin wooden sheets. The layers are glued together so that adjacent plies have their wood grain at right angles to each other for greater strength. There are an odd number of plies, as symmetry makes the board less prone to warping.

The physical characteristics of plywood are:

-Density: 420-440 kg/m3.

-Moisture Resistance: very high.

-Thermal conductivity: very good thermal insulator, similar to that of solid wood.

-Thermal conductivity values are around 0.11 to 0.12 (Kcal / mh ° C = W / (m_K)).

-Electrical conductivity insulation.

The mechanical properties are:

-Flexural strength: 30-60 N/mm²

-Modulus of elasticity: 4000 N/mm²

-Start of screws and nails: excellent

Picture 5. Plywood

Source: http://www.unitedplywood.in/plywood

5.5. Manufacturing process

As mentioned earlier the manufacturing will be completed by carpenter Kenneth Julin's students at the vocational school Yrkesakademin's carpenter study programme. The team provided the drawings and plans, while the students under the lead of Mr. Julin took over responsibility for the manufacturing. The various parts of the box have been manufactured in plywood sheets with a thickness of 9-12 mm. The different parts of the box are manufactured separately and then put together in the end.

5.5.1 The sides of the box

For making the sides of the box plywood sheets with the thickness 12 mm were used. The dimension of each side is 500 x 400 mm *(see drawing BX-0200).*

Picture 6. A side of the box

On each of the four vertical sides of the box there will be strips of plywood for keeping the modules in place. The measures of these strips are 400 x 70 x 50 mm. Before gluing the strips to the sides the strips are to be cut so that they have the geometric shape of the letter L. Once this is done and the stripes are glued to the sides, the edges will be cut at 45 degrees as shown in picture 7.

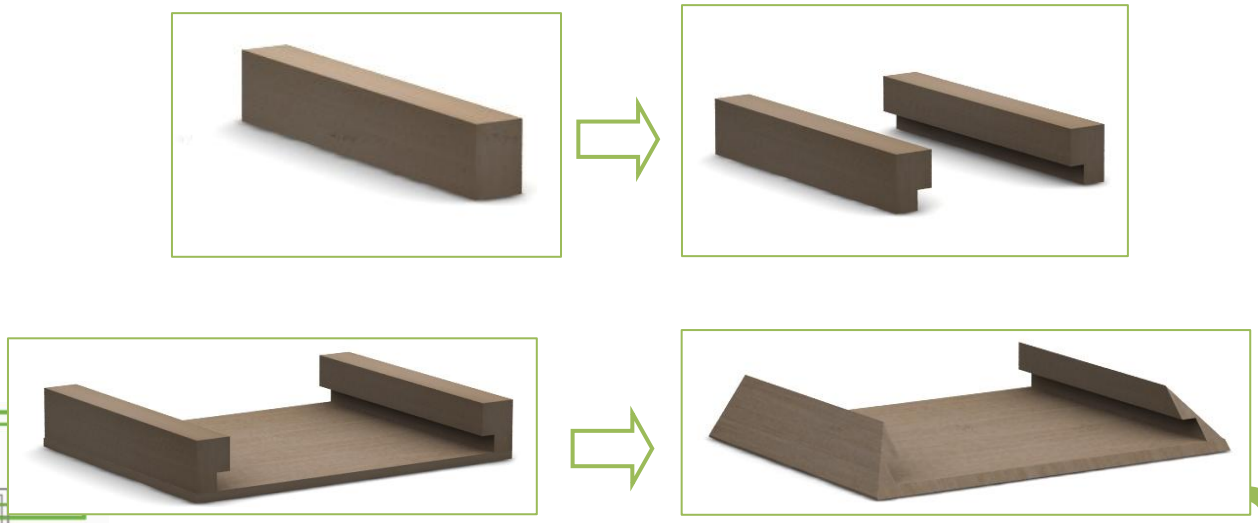

Picture 7. The plywood stripes and the attachment of these to the sides of the box.

5.5.2. The cover

To make the lid of the box four plates for the sides with the dimension 525 x 110 mm are required *(see drawing BX-0502*). These plates must be cut to 45 degrees on the top and two sides, so that they can be assembled, creating a square lid or cover for the box. The other necessary piece is the top of the lid, with a size of 525 x 525 mm and cut at 45 degrees on its four sides *(see drawing BX-0501).*Finally, the five pieces are glued together and the cover is complete *(see drawing BX-0500).*

Picture 8. The assembly of the cover for the box.

5.5.3. The drawer

At the bottom of the box there will be a drawer, with the main function of storage for the items in the box and for spare parts. The support for the drawer is the set where the box will be inserted. The drawer support consists of five parts, all bonded by their ends, as shown in the picture. The overall dimensions are 500 x 500 x 190 mm *(see drawing BX-0400).*

The drawer itself consists of four rectangles creating attached to the base. All the elements are made from plywood. The final size of the drawer is 480 x 490 x 130 mm *(see drawing BX-0100).* In the front plate a hole is made for inserting a lock with a key for pulling the drawer out and for locking it during transport and storage. The five parts are glued together and forming the drawer.

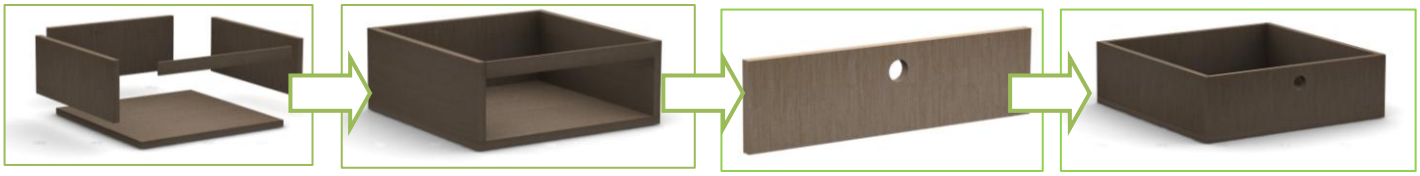

Picture 9. The drawer.

5.5.4. The modules

The modules are composed of four side strips, two cut to form L-shaped profiles and the base. The final module dimension is 330 x 380 x 50 mm. To build a module the parts required will be cut into rectangles. Below is the desired shape of the strips, according to which they follow the desired design. The components will be united creating three modules and one for storing the instructions.

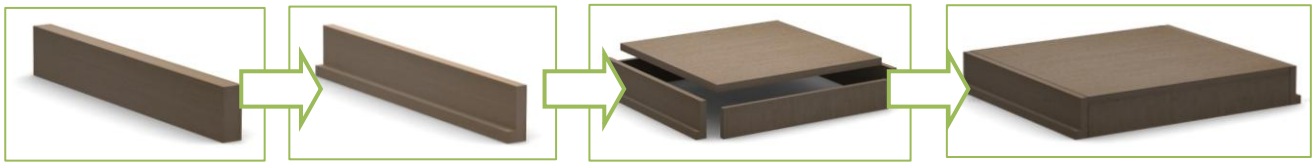

Picture 10. Strips and basis forming a module.

5.5.5. The basis of the box

The basis of the box consists of a square of 500 x 500 mm which is cut at 45 degrees on all four of its sides. Inside is a hollow square of 340 x 340 mm. To make the base four strips have been cut, forming the sides. These are then glued together to form the desired shape of the basis *(see drawing BX-0300).*

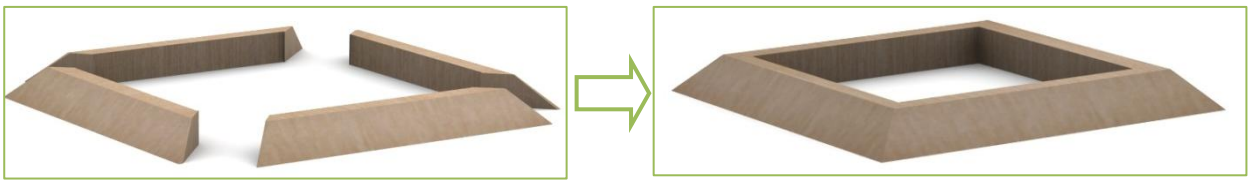

Picture 11. The basis of the box.

5.6. Assembly

Once all the components of the box are made the final assembly can be done. To assemble the components it's necessary to make some holes in several of the components The first step taken is to screw the closing mechanism to the sides to be able to place the cover over the four sides of the box and keeping it in place. The basis of the box will be attached to the drawer support and wheels will be mounted, by four screws each, at the very bottom of the box.

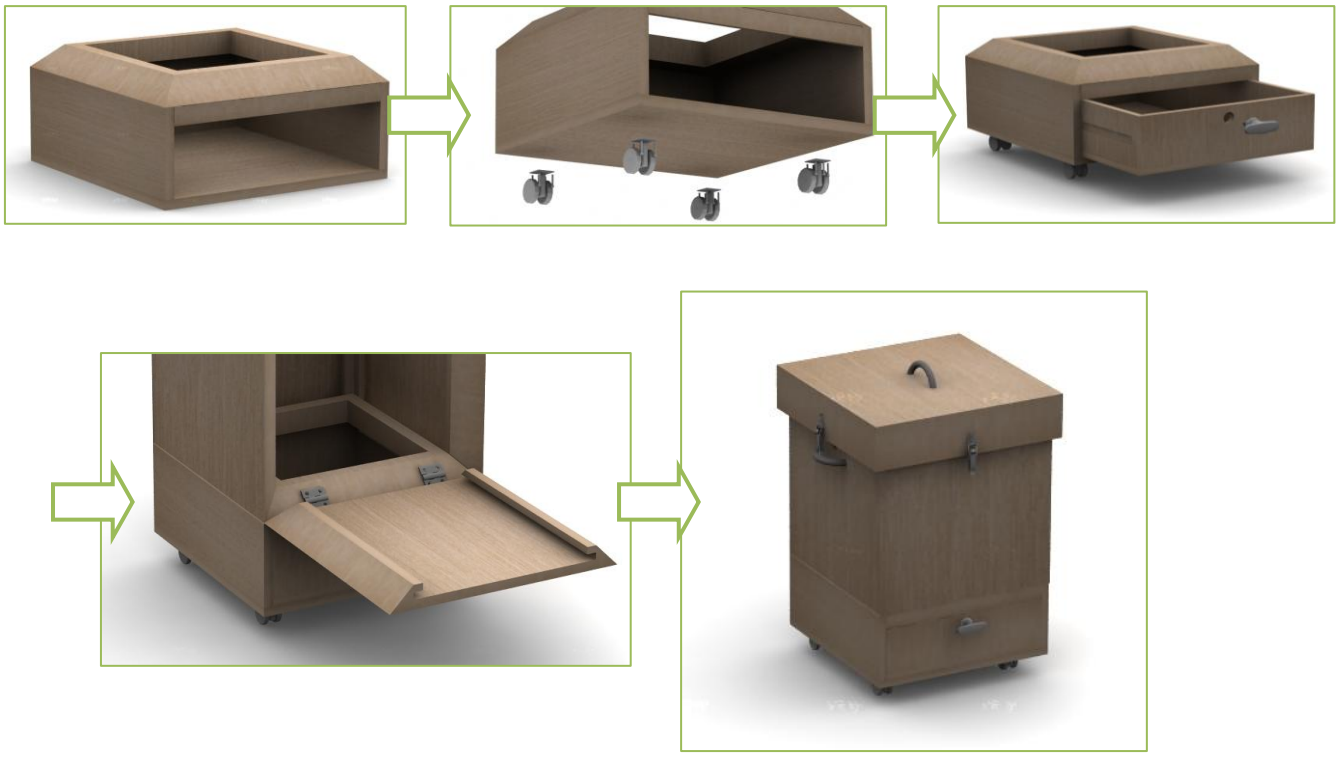

Picture 12. Assembly of the box.

To keep the drawer in place guides are inserted at the sides of the support drawer and at the sides of the drawer. On the drawer a handle with a locking mechanism is put for easy opening and secure transport. The next step is to place hinges on the sides facilitating the opening of each of the sides. The sides can be kept open horizontally to the ground, therefore the team intend to place some triangles or wedges on the outer side of each module, allowing the module to "rest" on this while in a horizontal position.

Following this the handles need to be attached on two opposite sides of the box as well as on top of the cover. The final step will be to make holes in the cover and place

the locking system there for keeping the cover closed over the sides of the box. Once assembled the entire box is decorated with stickers covering the box. The stickers will have a type of design that shows what kind of things the user will encounter when opening the box.

5.7 Tools

The tools used for creating the plans of the box were AutoCAD 2009 for the drawings for all the pieces of the box, 3D Studio Max for doing the sketches and the graphic design program Adobe Illustrator for the outside drawings of the box. At Yrkesakademin's carpenter department they used various types of machines for making the box.

6. Module 1: Wind energy

6.1 Design requisites and specifications

The design requirements for the wind power module spring from the fact that there is a need to make the simulation as realistic as possible. The module needs to show the connection between the blowing wind, a wind turbine and the transformation of wind energy into electricity.

What also needs to be taken into account is the limited space in the box, and that when closing the box, the wind mills shall not collide with other objects or modules. To accommodate this need, the team sat the approximate height of a complete wind turbine to 15 centimeters. In the design this needs to be taken into account when positioning the contents.

The final design of this module consists of two wind turbines and a house. This is to make the transformation of wind energy to electricity as visual and realistic as possible on such a small area. The house will be illuminated by the energy delivered by the wind turbines. To create a simulation of blowing wind you can use a fan or even a blow-drier. The parts will be constructed of plastic in Technobotnia's 3D-machine.

6.2 Description of the product

The module of wind energy contains two wind turbines and a house. In this module the team mainly aims to explain to children what wind power is and how it's transformed into electricity. This will be made clear through the simulation, along with the instruction sheet for the module.

For the simulation the team thought of using a blow-drier as the wind source. The wind source will be pointed at the two wind turbines. As the wind source makes the blades of the wind turbines spin, the generator (alternator) turns the energy retrieved from each turbine. In other words, the turbines are connected to an electrical circuit,

where electricity is produced through the rotation of first the blades and then the generator. The electric circuit then leads the electricity to a series of diodes inside the house, lighting up the house.

In this way, children can see how wind energy can be used to produce electricity, in our case to light a home. Of course in reality the wind turbines are used to produce electricity for both industrial owners in the so-called wind farms, but also smaller wind turbines for more private uses are around. The wind energy module strives to familiarize children with this type of energy.

Aside from the two wind turbines lighting the house, the module also contains a wind mill with all parts dismantled. This wind mill is made for increasing the degree of interactivity even more. The wind mill with all its pieces are placed in a form, where you can find each piece and next to it its name. The users can assemble the wind mill with their own hands, getting more familiar with the construction.

6.3 Characteristics and materials

The modules measures, together with the measures for the mills and the house can be found in the drawings in the appendixes *(see drawing BX-1000).* The materials used for the wind energy module are plastic, an incorporated dynamic generator, copper wires for the electrical circuit, LEDs/diodes for illuminating the house and finally glue and welding items.

The house and the wind turbines will be made of plastic and put on top of a base also made of plastic. The decision to use plastic for the base was because this does not noticeably increase the total weight of the box. Furthermore, plastic allows the desired design to be made and also gives durability to the pieces.

To produce electricity to the mill we have incorporated a dynamic generator. Measures and corresponding characteristics as you can see on map *BX-1400.*

6.4. Manufacturing process

The manufacturing process of this module, as with the other modules, starts with making the base. Once you have the wooden base the manufacturing of all the elements of the set can begin.

6.4.1 Wind turbines

The turbines are composed of a base, a generator, a box where the generator is kept, the blades and a series of electrical components. The base is made by creating a hollow cylinder of plastic 15 cm tall *(see map BX-1100).* This item is to be made in Technobotnia's 3D plastic printer in cooperation with Mika Billing.

The base of the wind turbine will be a hollow cylinder of plastic, inside which the cables for the generator will be. These cables will then go to a little, rectangular box where the generator is. The cover box for the generator will be made from a plastic sheet from Etra Oy. The plastic sheet will be cut into rectangular pieces, which will then be glued together. The generator should rest on some guides, above the module's wooden part, so that it doesn't cause the module to vibrate when activated.

The blades for the wind turbine will also be manufactured in the 3D plastic printer and attached to the upper base of the turbine. Electrical components to be used in this module are: cables, power strip to connect the two mills, two generators for the mills in function and LED diodes for the house.

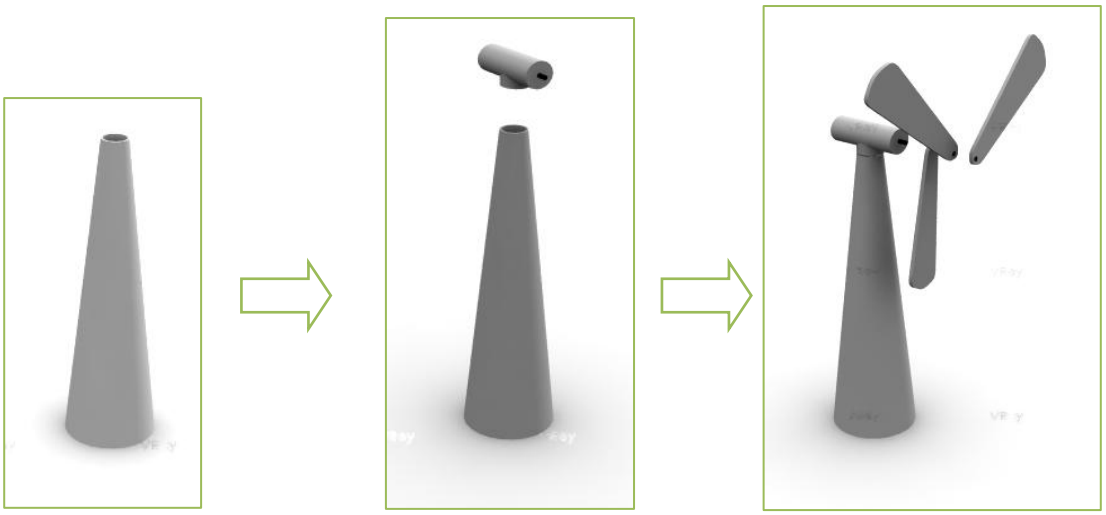

Picture 13. Wind turbine

6.4.2 House

Another important part of the module is the house where one can see the transformation of wind energy into electrical energy. This will be manufactured in plastic from Etra Oy, sawed into rectangular pieces, acting as walls, roof and floor when glued together *(see map BX-1200).*

Picture 14. House

6.4.3 Mill module

Another of the components that make up this module is a dismantled mill that the user can put together by hand. To create this piece it was planned to follow the same steps that were made for creating the working mills. The only difference is that this mill will not be working with a generator inside, its purpose is to give education about which parts a wind mill is made of. The dismantled mill will be placed on a wooden base, with labels of the names of each piece of the mill *(see map BX-1300)*.

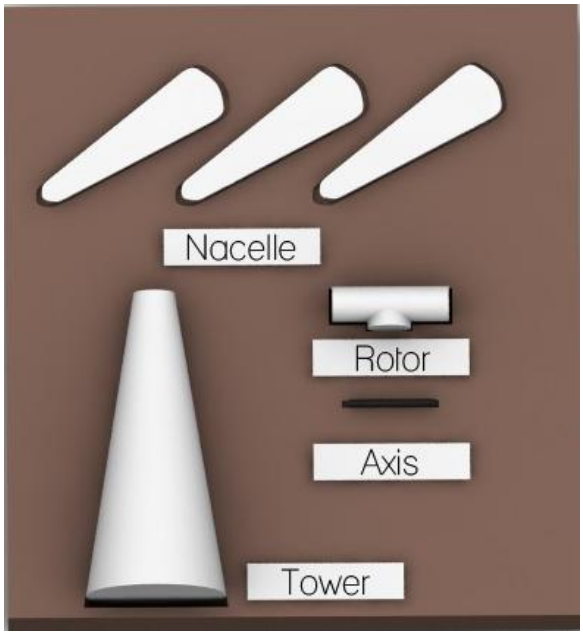

Picture 15. Mill module

6.5. Assembly

This module consists of two wind mills that under the action of a hair dryer (simulating the wind) will move the blades and produce electricity to light a series of LED diodes placed in the house.

The first step is to drill two holes in the wooden base of the module where the wind mills will be placed. These holes will store the cables connected to the generator below the base of the module. The intention of keeping the cables under the base of the module is to make it more easy working with the electrical circuits and in addition also prevent users from being unintentionally harmed.

After this, the wind mills can be glued to the base of the module. The reason for gluing is mainly because the base is not thick enough for attaching anything with screws. The next step would be to connect the cables to each of the terminals of the generator. The cables are then connected to the house, lighting the LEDs when the generator is running.

The last step in the assembly of the mill is the placement of the blades. These will be embedded in the output shaft of the generator. Once both mills are mounted on the module and the respective cables are connected in series to a terminal located at the rear of the module base you will get a fully functional module.

The house will be made out of individual plastic parts. The parts will be sawed out from a PVC sheet. When these parts are glued together and colored, by paint or colored paper attached to the inside, the house can be attached to the module base. Inside the house there will also be a LED diode, lighting up when the wind turbines are in action.

7. Module 2: Solar and heating energy

7.1 Design requisites and specifications

The module for solar and geothermal energy aims for teaching children what these energies are and how they are applied in everyday life. Because of the difficulties with simulating geothermal energy, it was decided to design a model of a house. This house is connected to a geothermal heating system, displayed in the module.

One of the reasons that led us to making this model is how difficult it is to properly explain to children 6-10 years old what geothermal energy is and how it works. The other reason is that in Finland there are not so long hours of sunshine, and therefore geothermal energy might be used as another way of getting energy apart from solar energy systems. The main specifications for this module are to achieve a good simulation of geothermal energy as well as solar energy and to show that these two can be combined.

7.2 Description of the product

The module consists of a house in miniature. This represents a home where the user can see how both renewable energies can be used together. The house will have solar panels placed on the roof. These panels represent the way one can make use of the energy emitted by the sun, for example by turning it into electricity or for heating water.

It was also thought to make half of the ceiling of glass. In this way we can show that there are other ways to harness the sun, such as adapting the homes according to the weather where you are, meaning that in warmer countries with many hours of sun, this might be a useful idea.

Geothermal energy is represented in the module in two parts; the first in a circuit of pipes in a horizontal position outside the house. In this way, children will be taught how energy coming from the center of the earth can be harnessed as heat. This energy

can heat the water circulating inside the pipes. These pipes continue inside the house, where the plumbing circuit is inside the walls.

7.3 Manufacturing process

The house is composed of different pieces of plastic, and as mentioned above they were initially designed to be made in the 3D plastic printer. After having discarded that option the team proceeded to get the parts separately from a plastic sheet. To make the house the rectangular parts that form the outer structure of the house, together with the triangular roof, were cut out of the plastic sheet.

To make the pipes thread was used and folded in such a way that it simulates a circuit of pipes. The following circuits are painted red or blue depending on the temperature of the liquid transported. Red means hot and blue means cold. The next step was to work on the basis of the module as we needed to create a false floor to show the circuit of buried pipes. The base of the module will be painted green to simulate grass in a garden. The house will also be painted.

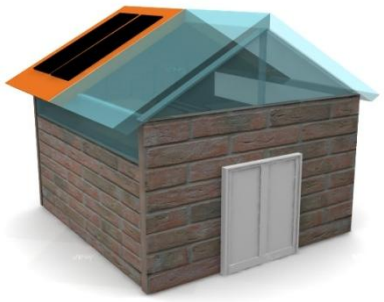

Picture 16. House closed

Picture 17. House open

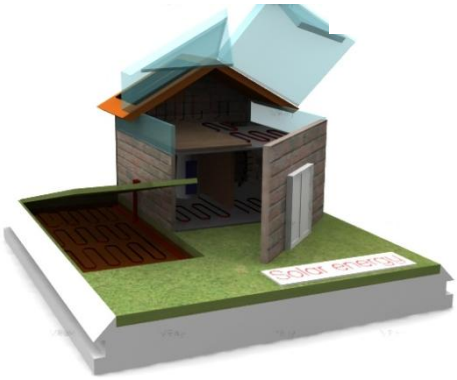

Picture 18. Module heating

7.4 Assembly

This process includes joining all the pieces of plastic and creating a garden-like floor with a raised part around the piping circuit on the base of the module. Glue is used for attaching the house and the piping circuit both outside and inside the house. As you can see from the pictures, the roof consists of two parts. One is the opaque plastic found in the back of the upper floor, which is stuck on the structure of the house. The other part of the roof is made of acrylic and will be supported by the structure of the house and connected to the other part of the roof with two small hinges to allow opening of the roof and viewing of the inside of the house. The assembly of the front of the house is also linked with two hinges and so, as with the roof, providing opening for viewing the interiors.

8. Module 3: Save Energy

8.1. Design requisites and specifications

This module is designed to educate children about the electricity consumption by light bulbs at home. The team thought of designing a module where the children should place the bulbs in fixtures. The aim of this game is that they realize what kind of bulbs consume more and what kind less.

There will be three different types of bulbs for the module: a regular incandescent light bulb, a halogen bulb and a LED bulb. These bulbs will have the same socket size and shall be placed in the order the user think is correct according to which bulb uses the most, the middle and the least amount of energy. Each socket has a picture of a smiley face in front of it, one green for the least energy, one yellow for the medium consumption and a red for the largest consumption.

8.2 Description of the product

The save energy module consists of three bulbs: one incandescent bulb, one halogen bulb and one LED bulb. These bulbs should be placed in their respective socket according to energy consumption. All the sockets are the same size so the bulbs can be placed in any of them.

To let children know if they have put the bulbs in the correct order or not, the design includes cards that are differentiated according to consumption. The cards depict a smiley face in the colors green, yellow and red. These cards will form a circuit that, when children put them in their place on the module the circuit will be closed. If the solution is correct a green LED diode will light up. In case the placement of the cards is wrong, the circuit will be closed in another way, lighting a red LED diode.

By this, children can see which bulbs consume more energy and which bulbs consume less. Thus it will make them aware that simply changing light bulbs at home could save a lot of energy which, ultimately, translates into economical savings.

8.3 Material and manufacturing process

For this module the production process can be divided into three parts: the first part is related to all electrical components, the second part consists of elements making the sockets more aesthetic and the third part is the cards with smiley faces. The electrical components include the power cord, three E14 sockets, an E14 incandescent bulb, an E14 halogen bulb, an E14 LED bulb and an outlet or battery case. All these components have been purchased from stores in Vasa.

8.3.1 The socket covers

At first the intention was to design plastic covers for the sockets. After dismissing this solution for economical reasons, it was decided to design the covers by simply using empty toilet paper rolls. The first socket cover is shaped like a cone, the second is sphere-shaped and the third is a cylinder *(see drawings BX-3100, BX-3200 and BX-3300)*. The socket covers are designed to hide away the sockets and will be decorated by colored cloth to give a more colorful look to the module.

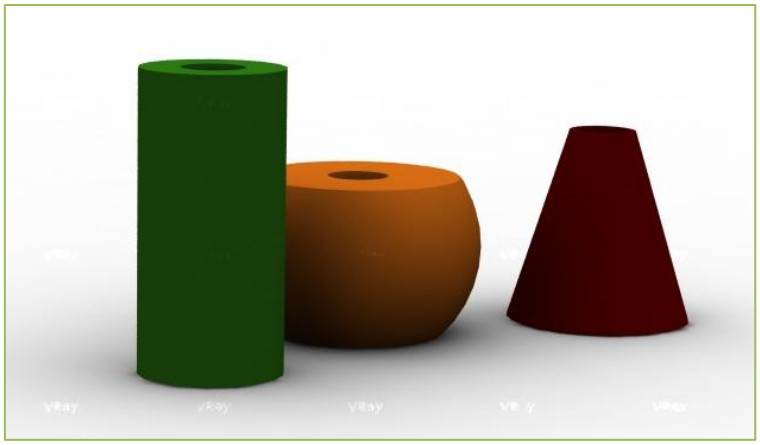

Picture 19. The socket covers

8.3.2 The smiley cards

To make the cards it was intended to use a plastic sheet PVC from Etra Oy and cut three rectangular cards with the measures 100 x 60 x 5 cm *(see drawing BX-3400).* At the top of the cards a drawing, designed with Adobe Illustrator, is placed. The drawings depict a smiley face, one happy in green, one content in yellow and one not so happy in red. The smiley faces are supposed to show the different amount of wasted energy per bulb. Thus, the green is for the one wasting the least, the yellow for the one in between and the red for the one wasting the most.

The design will be printed on paper and stuck to the top of the card by transparent sticky paper. In the back of each card a hole is made to place copper plates. The copper plates will be responsible for closing the electrical circuit lighting up a LED diode when placed in the correct order. In each of the cards, the copper plate is placed in a different position. The reason for the copper plates being in different position is that if children put the cards in the wrong way, the circuit won't be closed and the LED diode will not light up.

Picture 20. The designed smiley faces

Picture 21. The planned way for attachment to the cards

8.5 Assembly

The assembly of the module begins with drilling three holes in the base of the module where the sockets shall be housed and supported. The sockets is placed on the module and fixated. The following step is to make the electrical connections. These are composed of an electrical circuit connecting the bulbs to a power source.

The electrical circuit is designed to illuminate the LED diodes in front of each card. The circuit is open until the right card with the corresponding copper plate closes the circuit. The electrical circuit consists of a battery from where the cables go to the part of the module where the cards are. The next step in the process is connecting the three sockets with the bulbs to a power source, allowing them to light up when put in the sockets. All this will be mounted beneath the module base.

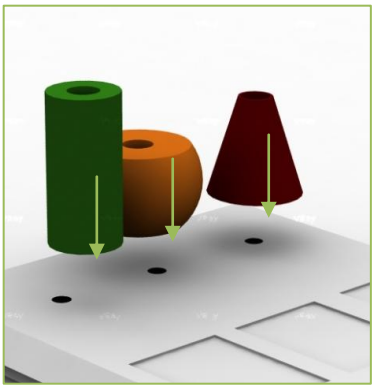

Picture 22. Step 1: put the sockets.

Step 2: Put the leds.

Step 3: Put the bulbs

Picture 23. Module save energy

9. Module 4: Energy game

9.1 Design requisites and specifications

This module has the handicap of being the central module. This means that the contents cannot be too high, because this could cause collisions with the other modules when closing the fully assembled box. Therefore the team decided to create a game for children where they could play with cards depicting different designs regarding renewable energy processes. These cards shall be placed in vertical rows in a certain order, creating a complete process in each row. The processes depicted are: geothermal energy, solar energy, biomass energy, wind energy and hydraulic energy.

The specifications for this module thus include reduced height and size of the game, that the contents should cover different types of renewable energies and finally that it should e possible to use electrical components in the design.

9.2 Description of the product

This module consists of a game made up of different pieces and a game board placed on the module in the middle of the box. On top of the cards a series of pictures, depicting various stages in different energy processes, are placed. The game board consists of twenty cards and twenty corresponding holes in the game board, where the user shall place the cards in the correct order for the process chosen. To see if the process is correct, five LED diodes are connected to an electrical circuit together with the cards, so that the diode lights up when the cards are placed in the correct order and thus closing the circuit.

Picture 24. The designs for the renewable energy processes, placed in the correct order when looking at them row by row vertically.

9.3 Characteristics and materials

For this module it was necessary to design drawings of a series of elements. These drawings were to be located at the top of the cards. For this Adobe Illustrator and a graphics tablet was used. All designs are originals and made by the team.

The rest of the pieces that form the central module were to be designed in plastic PVC from Etra Oy. The guides for creating indentions to keep the cards in place will be made in the 3D plastic printer.

9.4 Manufacturing process

9.4.1 The cards

The cards can be manufactured from a plastic sheet PVC from Etra Oy, cut into appropriate dimensions, after which the drawing for each card is placed on top. The drawings are printed on paper and attached to the card by sticky plastic also used for covering books. On the back of the card the relevant strips of copper will be placed enabling possible the circuit to close when the card is in the correct place, thus lighting the LED diode (*see drawing BX-4000)*.

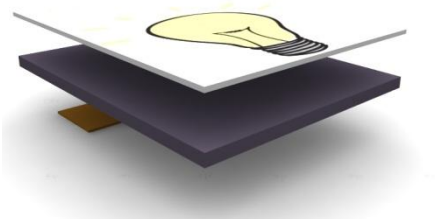

Picture 25.The attachment of the drawing on a card

9.4.2 The module

The module where the chips will be placed is made of wood. The measurements are 340 x 340 x 70 mm (*see drawing BX-0700*). For keeping the cards in place the team thought of placing a series of guides on the top of the module facilitating the extraction and insertion of cards *(see drawing BX-0900).*

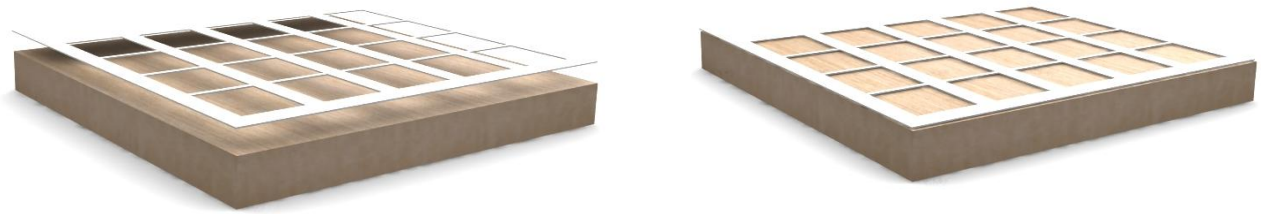

Picture 26. The guides placed on the module

9.5 Assembly

First the LED diodes are placed on the module and the required wires are attached to them. The wires will continue over the board, under the guides, going across the indentions where the cards will be placed. The wires will then be connected to a 12 V battery. Together with copper plates on the back of each card, the circuit will be closed when the cards are placed in the correct order. The circuit will only be closed when the right card is placed in the right indention, because the copper plate on the back of each card will be placed in slightly different positions on each card.

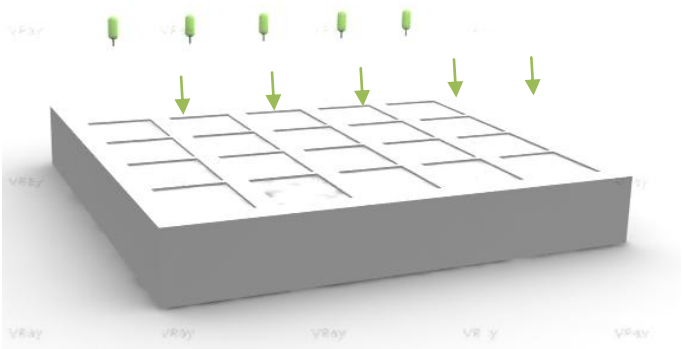

Picture 27. At the left: the final game board where the cards shall be placed. At the right: the module fully completed.

.

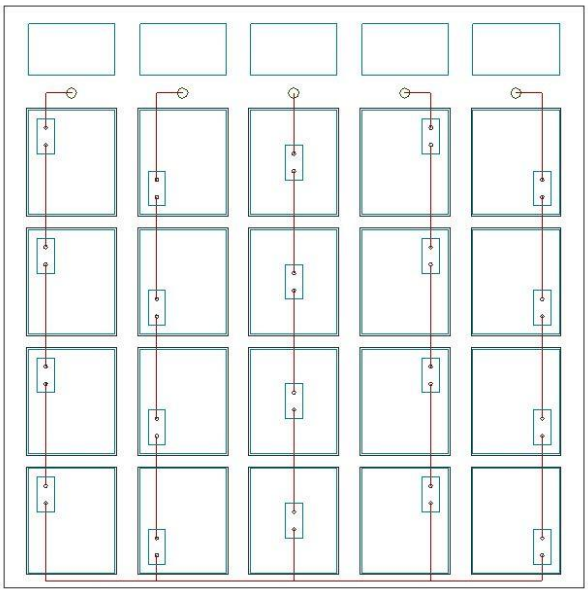

Picture 28. The circuit diagram for the game board.

10. Module 5: Information

10.1. Design requisites and specifications

The main objective of this module is to accommodate all the instructions for using the other modules, along with information if needed. This will be acquired by attaching a thin plastic sheet to one of the modules on the side of the box. The team thought it would be good to have explanations for the other modules and therefore decided to use one of the modules for this purpose. The explanations will be available in Swedish, Finnish and English, allowing teachers and younger users to get additional information about the contents of the demo kit.

10.2 Description of the product

The final solution adopted for this module is to attach a sheet of methacrylate to one of the modules on the side of the box. The team chose to use methacrylate because it is transparent, allowing the user to see what's behind the sheet. The explanations for the various modules are printed on paper, which are then laminated for durability. The lamination also allows for wiping off the instructions if stained. The models of the explanations can be found in the appendixes.

10.3 Characteristics and materials

Methacrylate (later PMMA) is a transparent thermoplastic, often used as a light or shatter-resistant alternative to glass. Chemically it's the synthetic polymer of methyl methacrylate. PMMA is an economical alternative to polycarbonate (PC) when extreme strength is not necessary. Additionally PMMA does not contain the potentially harmful bisphenol-A subunits found in PC. PMMA is often preferred because of its moderate properties, easy handling and processing, and low cost. PMMA is a strong and lightweight material with a density of 1.17–1.20 g/cm^{3,} which is less than half of

that of glass. The impact strength is also good however, still significantly lower than polycarbonate and some engineered polymers.

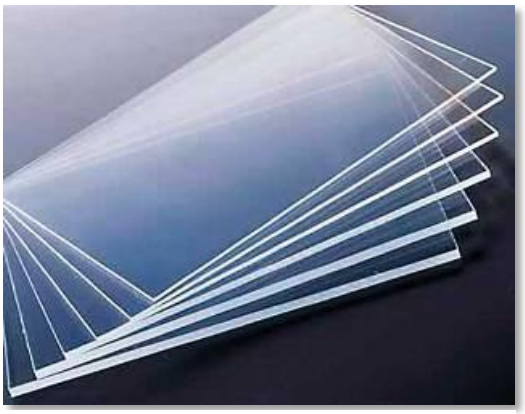

Picture 29. PMMA

Source: *http://news.alibaba.com/article/detail/investment/100036519-1-evonik%2527s-investment-euro-250-million.html*

10.4. Manufacturing process

The manufacturing requires a methacrylate sheet with the dimensions 360 x 200 mm, which will then be attached to the sides of the module. The graphic explanation sheets have been created with the design program Adobe Illustrator. The team started with making the English explanations, which were then translated to first Swedish and then Finnish. These explanations have been printed and laminated to prevent deterioration.

10.5 Assembly

The assembly only requires attaching the methacrylate sheet to the module after which the explanation sheets can be inserted behind it.

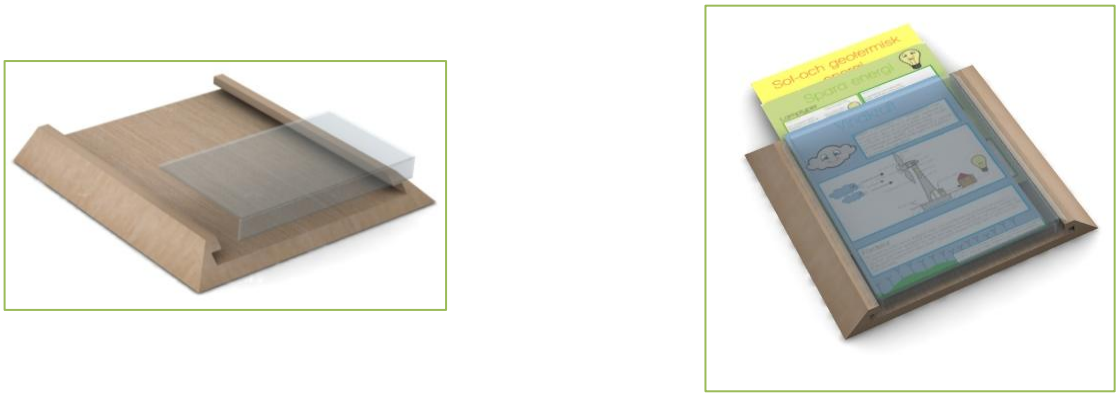

Picture 30. The module with the explanations.

11. Website

11.1 The aim of the website

The main aim with creating a website for the project includes giving information about the project, creating a community where people can get more familiar with EPS, the gaining of valuable market research and advertising the project. Furthermore the website allows for a visual view of the final product while at the same time branding the product.

11.2 Website usability analysis

11.2.1 Standard

In order to broadcast the concept of the project, the team needed to make people feel free and comfortable to browse the website. For this purpose the program chosen to be used for the creation of the webpage was XHTML 1.0 transitional standard because this also allows mobile devices to visit the webpage.

11.2.2 Cross-browser check

Since different browsers use their own techniques to resolve the CSS files, there is a need to cross check our website's performance when run on different browsers. Otherwise the webpage might lead to total opposite results on one browser compared to another.

Picture 31. The browsers used in the test

Source: www.google.fi

Each webpage was viewed on a PC with a screen resolution of 1024 x 768 pixels, using six common browsers (Internet Explorer

8, Internet Explorer 7, Firefox 3.6, Opera 10, Safari 4, and Google Chrome 5) to determine if there were significant differences or problems. Any such problems were highlighted and where appropriate also illustrated by the inclusion of a screenshot of the relevant page(s) as seen in that particular browser.

11.3 Design style and structure

The design style is based on design components such as; logo, banner, columns, menu, headers, text and images, which complements each other. Together with the page navigation the use is made easier. The nominated pages are then viewed at three common screen resolutions to see the effect on the page structure and content. Finally the title together with the keywords and description metatags are checked to ensure that they have been included.

11.4 Technology and site map

The technology used for the creation of the website was CSS (Cascading Style Sheets), Flash and XHTML. CSS is a program used for defining text and paragraph styles used throughout the site. Flash is a technology creating animations and interactions on a website, while XHTLM is a web language, using a set of markup symbols or codes inserted in a web design file. The web design file is then intended for display on the web.

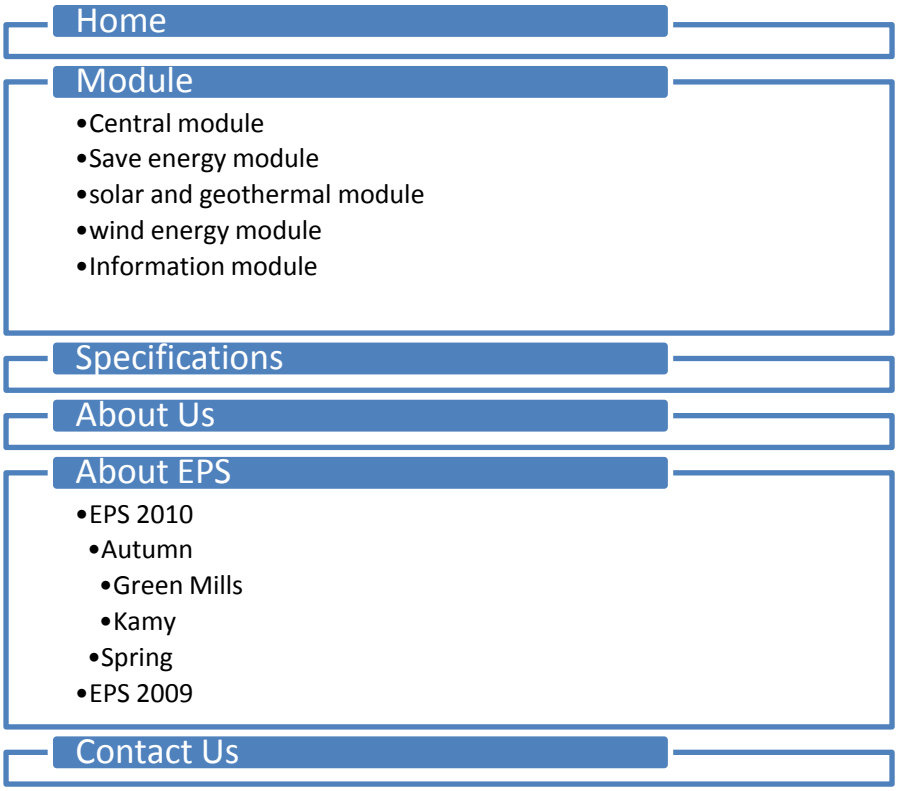

Picture 32. The site map.

12. Appendixes

12.1 Planning of the project

The first step taken by the team when the project was to begin the planning of it. This will set a series of steps and dates to accomplish these steps. The planning set was these:

1. Definition of the project *(01 September-17 September)*
    - 1.1 Budget *(15 September- 17 September)*
2. Planning of the project *(9 September-17 September)*
    - 2.1 Pert *(15 September)*
    - 2.2 Gant *(9 September- 17 September)*
    - 2.3 Risk evaluation *(15 September)*
    - 2.4 Schedules *(13 September- 17 September)*
3. Backgrounds and references *(06 September-1 October)*
    - 3.1 Search of information (types of energy, materials) *(06-31 September)*
    - 3.2 Questionnaire *(13 September- 24 September)*
4. Design requisites *(06 September- 01 October)*
    - 4.1 Specifications *(06 September-01 October)*
5. Analysis of solutions *(13 September-29 October)*
    - 5.1 Searching for solutions *(13 September-22 October)*
    - 5.2 Description of the selected solution *(25 October- 29 October)*
7. Detailed description of selected solution *(1 November- 5 November)*
8. Description of the product *(1 November- 5 November)*
9. Characteristics and materials *(1 November- 5 November)*
10. Manufacturing process *(1 November- 12 November)*

11. Assembly & Instructions *(12 November- 19 November)*
12. Prototype *(22 November-16 December)*
13. Website *(01 November-16 December)*

12.2 Pert

The PERT method is a technique that allows you to manage the scheduling of a project. The PERT method consists of graphically representing a network of tasks, which, when placed in a chain, can lead to the achievement of the objectives of a project.

Tasks	Preceded task	Duration (weeks)	Responsible	Support
A. Definition	-	3	Sofia	Eva
A.1 Budget	A	1	Eva	Sofia
B. Planning	A	2	Eva	Sofia
B.1 Pert	A	1	Guillermo	Eva
B.2 Gant	A	2	Eva	Guillermo
B.3 Risk evaluation	A	1	Eva	Sofia
B.4 Schedules	A	1	Sofia	Eva
C. Background and references	A	5	Guillermo	Sofia
C.1 Search information	A	5	Guillermo	Sofia
C.2 Questionnaire	A	4	Sofia	Guillermo
C.3 Laws and rights	A	5	Sofia	Eva
C.4 Bibliography	A	5	-	-
D. Design requirements	A,B,C	4	Eva	Guillermo
D.1 Specifications	A,B,C	4	Guillermo	Eva
E. Analysis of solutions	D	7	Guillermo	Eva
E.1 Searching of solutions	D	6	Eva	Sofia
E.2 Description of the selected solution	D	1	Eva	Guillermo
F. Viability	D	1	Guillermo	Eva
F.1 Economic	D	1	Eva	Sofia
F.2 Technique	D	1	Eva	Sofia
F.3 Legal	D	1	Sofia	Eva
G. Detailed description of selected solution	F,D	1	Eva	Guillermo
H. Description of the product	G	1	Sofia	Eva
I. Features and materials	G	1	Sofia	Guillermo
J. Manufacturing process	I,G,H	2	Guillermo	Eva
K. Assembly & Instructions	J	2	Eva	Guillermo
L. Prototype	K	4	Guillermo	Eva
M. Web page	A	11	Eva	Guillermo

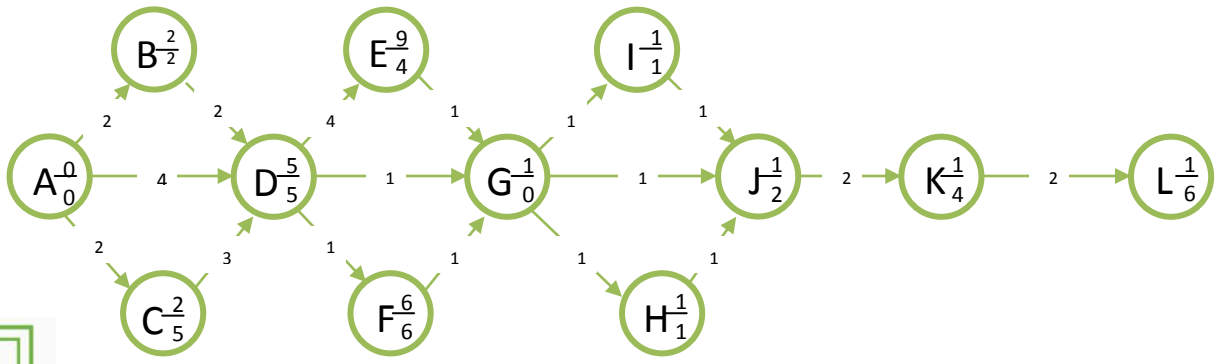

12.3 Gantt

A Gantt chart is a type of bar chart that illustrates a project schedule. Gantt charts illustrate the start and finish dates of the terminal elements and summary elements of a project. Terminal elements and summary elements comprise the work breakdown structure of the project.

	Week 35	Week 36	Week 37	Week 38	Week 39	Week 40	Week 41	Week 42	Week 43	Week 44	Week 45	Week 46	Week 47	Week 48	Week 49	Week 50
1. Definition	X	X	X													
1.1 Budget			X													
2. Planning		X	X													
2.1 Pert			X													
2.2 Gant		X	X													
2.3 Risk evaluation			X													
2.4 Schedules			X													
3. Background and references	X	X	X	X	X											
3.1 Search information	X	X	X	X	X											
3.2 Questionnaire	X	X	X	X												
3.3 Laws and rights	X	X	X	X	X											
3.4 Bibliography																
4. Design requirements		X	X	X	X											
4.1 Specifications		X	X	X	X											
5. Analysis of solutions			X	X	X	X	X	X	X							
5.1 Searching for solutions			X	X	X	X	X	X								

5.2 Description of the selected solution									X							
6. Viability									X							
6.1 Economic									X							
6.2 Technique									X							
6.3 Legal									X							
7. Detailed description of selected solution										X						
8. Description of the product										X						
9. Characteristics and materials										X						
10. Manufacturing process										X	X					
11. Assembly & Instructions											X	X				
12. Prototype													X	X	X	X
13. Web page								X	X	X	X	X	X	X	X	X

12.4 Risk evaluation

Risk evaluation is an evaluation of the different potential risks that can be found in the processes required to achieve the set goals of the project. It also gives the user a way to develop each of the different tasks in the project according to the evaluated risk.

1) Definition of the Project
    - Failure in the interpretation of the tasks
    - Lack of communication regarding the definition between the group members
    - Budget
    - Prediction of the actual budget
2) Planning of the Project
    - PERT
        - Problems in predicting the actual time spent on a task
        - Knowing what is the critical path
        - Match between the estimated time and actual time
    - GANTT
        - Use of project program
    - Risk evaluation
        - Know which tasks are those more likely to be carried out and seek solutions that are at high risk
    - Schedules
        - Be clear about what is wanted, to make schedules and graphics
3) Backgrounds and references
    - Search of information
        - Be clear about what is intended to be done, so that the risk will depend on the definition and project planning
    - Questionnaire
        - Receive enough responses to make a realistic estimate of what children know about energy
    - Bibliography
        - Save all information regarding consultation for the project
4) Design requisites
    - Specifications
        - Have a clear idea about what needs to be designed for the project, together with specifications
5) Analysis of solutions
    - Searching for solutions

        - Have a clear idea of the project, which together with the defined specifications allows the team to begin the task of finding solutions
        - Descriptions of detailed solutions

6) Viability
    - Economic
        - Problems in calculating the budget of the materials used
        - Some solutions may fall out of line with the budget
    - Technique
        - Access to machines capable of manufacturing the desired details
        - Understanding of the operation of the machines
7) Detailed description of selected solution
8) Description of the product
9) Characteristics and materials
    - Some difficulties may occur regarding finding the materials needed to perform our project.
10) Manufacturing process
    - Some difficulties may be found regarding the manufacturing of the components and modules
    - Problems with finding suitable machines for the desired solutions

ACTIONS	Risk Evaluation		
	Low	Medium	High
1) Definition of the project			
1.1) Budget			
2) Planning of the project			
2.1) Pert			
2.2) Gant			
2.3) Risk evaluation			
2.4) Schedules			
3) Backgrounds and references			
3.1) Search of information			
3.2) Questionnaire			
3.3) Laws and rights			
3.4) Bibliography			
4) Design requisites			
4.1) Specifications			
5) Analysis of solutions			
5.1) Searching for solutions			
6) Viability			
6.1) Economic			
6.2) Technique			
7) Detailed description of selected solution			
8) Description of the product			
9) Characteristics and materials			
10) Manufacturing process			
11) Assembly & Instructions			
12) Prototype			

12.5 Schedules

When the team started working on the project, the participants, both separately and all together, intended to meet a specific number of hours over the entire semester. These hours have been reported by each team member and then all of them combined creating the final estimate of total hours the group has been working (predicted hours). Week by week the project participants report their spent hours, creating a final accumulative of hours (accumulated hours). Below the comparison between the estimated hours and accumulated hours worked by the team is displayed.

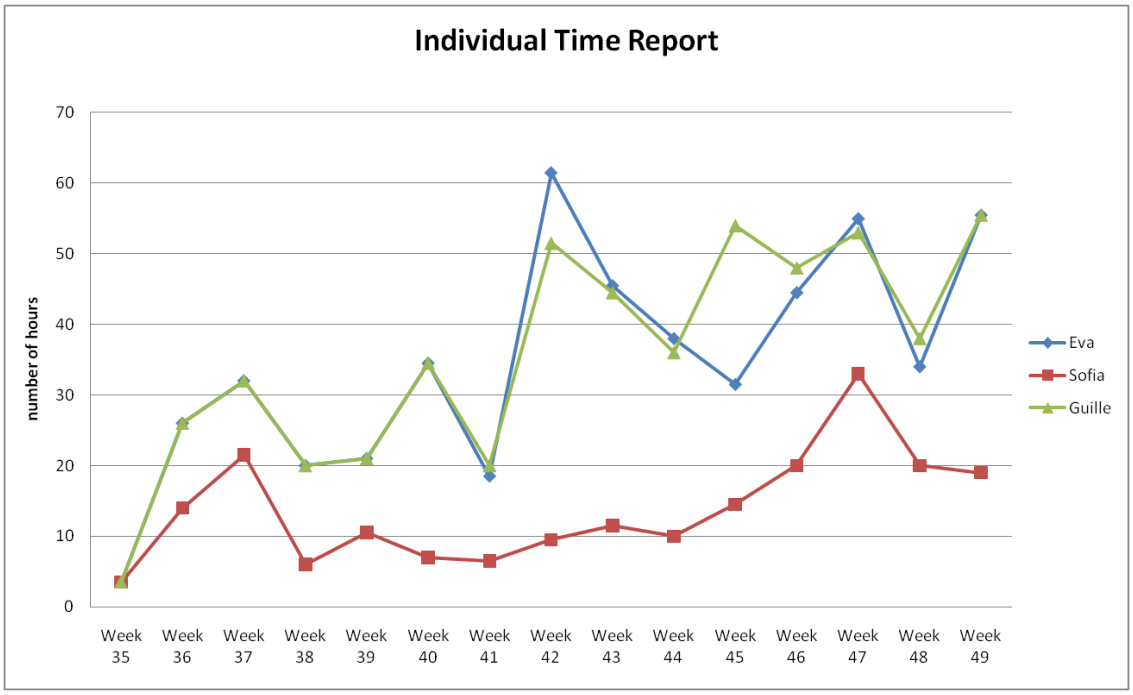

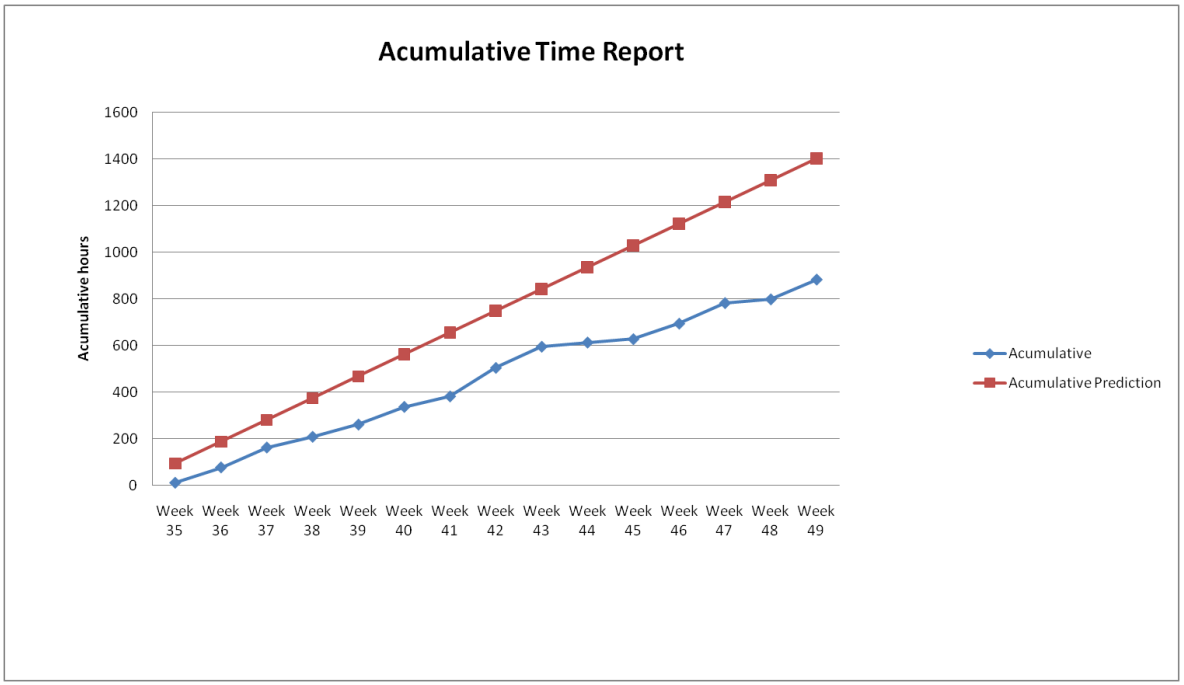
Acumulative Time Report
Acumulative hours
1600
1400
1200
1000
800
600
400
200
0
Week 35
Week 36
Week 37
Week 38
Week 39
Week 40
Week 41
Week 42
Week 43
Week 44
Week 45
Week 46
Week 47
Week 48
Week 49
Acumulative
Acumulative Prediction

12.6 Minutes of meeting

The project team held weekly meetings in which the project members as well as the rest of the support personnel had the opportunity to participate. The meetings were mainly follow-ups of the work done by the project team and what was to be done next. The minutes of meeting for project team Green Mills followed a model used for industrial meetings. The minutes of meeting are always the responsibility of the secretary and for this project it was decided they shall be sent out within two days of the meeting held. Below the model for Green Mills' minutes of meeting can be seen.

Novia University of Applied Scienses - EPS

Wolffskavägen 33
65200 VASA

MINUTES OF MEETING
GREEN MILLS 2010

DATE AND TIME

VENUE Room

PRESENT *Supervisor*
Iddrisu Abubakari (IA)

Project team
Eva Adell (EA)
Sofia Nordlund (SN)
Guillermo Moreno (GM)
Jiayuan Li (JL)

Requester of project Visual Demo Kit
Niklas Frände (NF)

Managing director
Kaj Lindedahl (KL)

DISTRIBUTION: All participants, KL, NF, and all other called but not present.

NEXT MEETING; DATE and TIME

CHAIRMAN: Eva Adell/Guillermo Moreno

SECRETARY: Sofia Nordlund/Guillermo Moreno

SUBJECT	Resp.	Finish date
1 Opening The meeting was opened at XX:XX.		
2 Previous minutes of meetings Discussion, possible corrections	RESPONSIBLE	Deadline
3 Picturing the subject Discussion, decision	RESPONSIBLE	Deadline
4 Picturing the subject Discussion, decision	RESPONSIBLE	Deadline
5 Next meeting Preliminary suggestion, date and time		
6 Closing of the meeting The meeting was terminated at XX:XX.		

12.7 Field study

QUESTIONNAIRE – RENEWABLE ENERGY

The aim with this field study is to get a general view of childrens (age 6-13) knowledge about renewable energy.

We ask you teachers to bring these questions up in class, in the way you see best fit. We ask you to return the questionnaire with answers either to the e-mail address sofia.nordlund@novia.fi or by mail to Sofia Nordlund, Rådhusgatan 46A A7 65100 Vasa.

The answers to the questions can be put down as short quotations or if you compile the most important things the students discussed. Kindly separate the answers according to the age, so that classes 1-2, 3-4 and 5-6 are separated. This only so that we can see the difference in knowledge between the different age spans. We will take the answers into consideration regarding the planning of the design of our Visual Demo Kit.

QUESTIONS

1. What is energy?

2. What is meant by renewable energy? (Energy from sun, wind, water, ground heat, biomass)

3. ”Green” energy, what is that? Which types of green energy exist? (Sun, wind, water, ground energy)

4. Where do energy and electricity come from?

5. Why do humans need energy and electricity?

6. Why do the lamps light up when one press the light switch?

7. Is the garbage sorted into recycle bins at home? Which types?

8. Can all trash be used again? In what ways can different things from the trash be used again?

Answers from Vasa Övningsskola (preliminary school with classes 1-6)

Students in class 1-2

1. A magnet, electricity, batteries, air, legs that are working, spit. Food and drinks gives people energy and you become alert and happy. Vegetables makes you strong. Coffee and sugar gives energy, but too much makes you fat.
   Energy from wood. A mill can be used to produce something, like flour. The wind makes wings move, like a wind mill. Wind mills gives us electricity. Water can also be used to get energy.
2. New energy, e.g. old batteries which can be used again. People can be tired and your legs don't want to work anymore.
   Wind, sun, water, ground heat. From thunder comes the lightning.
3. It's good. Energy from the vegetation which gives us air to breathe. Chlorophyll in leaves produce oxygen which we breathe, that is green energy.
   Vegetables, food is energy for the humans.
4. Electrical wires, food, wind mills, cables.
   Wind mills. Burning of bio trash. You can save energy if you shut off the lights.
5. We need energy to be able to do things, otherwise it's all black and you can't breathe and your heart can stop.
   To be able to live. For lights, heating batteries and the alarm clock.
6. Because of the cables going to the lamp. The big cables and wires transport electricity from the power plants. When you push the button the lamp starts to shine.
   The thread in them starts to glow when electricity comes to the light bulb.
7. Yes. Batteries, bio waste, metal, plastic and hazardous waste.
8. A lot can. Glass, metal, old paper, plastic and batteries. Iron can be melted and made into something new.

Students in classes 3-4

1. It's a power to do something. Can be electricity or speed.
2. That it never ends. Like water power, wind power and sun power.
3. Comes from the nature. A clean energy. Sun, water, wind.
4. From power plants; wind, water, sun.
5. So that we get heating and lights, can make warm food, so that we can move and live.
6. There's a wire from which the lamp gets energy. The electrical circuit is closed when you push the button and if you press again it's broken.
7. Yes. Batteries, bio waste, metal, plastic and hazardous waste.
8. A lot can. Glass, metal, old paper, plastic and batteries. Iron can be melted and made into something new. It's called recycling.

Answers from Molpe Skola (preliminary school with pre-school and classes 1-6)

Students in classes 1-4

1. Wind gives energy, food, water, sun and milk.
2. It comes back again.
3. Haven't heard about it.
4. Water, powerplant (electricity), windmills, sun, wind, heat from the earth.
5. Otherwise you can't bicycle to school
   To be able to move
   You can't live without it
   So that you can do things
   The kids also thought about the following items during this discussion; Lamps, TV, computers, the microwave heater, the kitchen stove, playstation/Nintendo wii, air-kick-bike, washmachine & dishwasher, radio, sauna, electric clock, batteries driven by electricity, vacuumer, printer, telephones, videos, electric cars, OH in the classrooms…
6. Because there are a lot of cables/wires going to lamps
   The electricity goes to the lamp when I press the light switch
   There is a cover coming in between the electricity and the lamp when I turn the lamp off
   The light switch takes away the electricity
7. Food leftovers, paper, bottles
8. Both yes and no answers. But the kids couldn't explain how or why they answered that way.

Students in classes 5-6

1. It gives the body the power to move
   Electricity
   Sugars in energy drinks
   Energy from the sun
   Strength, power, movement
2. Sunpanels
   Waterpower
   Groundheat
   Air heating pumps
   Windmills
3. Winpower
   Waterpower
   Waves in the ocean (wavepower)

Sunpower
Groundheat

4. Powerplants for electricity
   Nature
   Nuclear power
   Humans
   The sun
   The water
5. To get heat and light
   The cars, motors and other engines and machines
   To be able to live
   Electric devices
   Computers
   Food
6. Electric energy is transported to the lamp or another item that is supposed to give light
7. Yes, almost everything that is thrown into the trash at home is put in different containers (trash bins) and later brought to recycling stations in the village
8. Yes, almost everything can be recycled and used for something good again if it's put in the right container when you throw it in the trash; glas becomes new glas, cars become new cars.
   You can also repair things instead of just throwing them away.
   Clothes can be given away to stations that give them to those who need them.
   Mopeds (and other engines) can be repaired.
   The things one sees as trash someone else can use – recycling.

12.8 Sketches

12.8.1 The demo box

12.8.1.1Drawing BX-0000 Box set

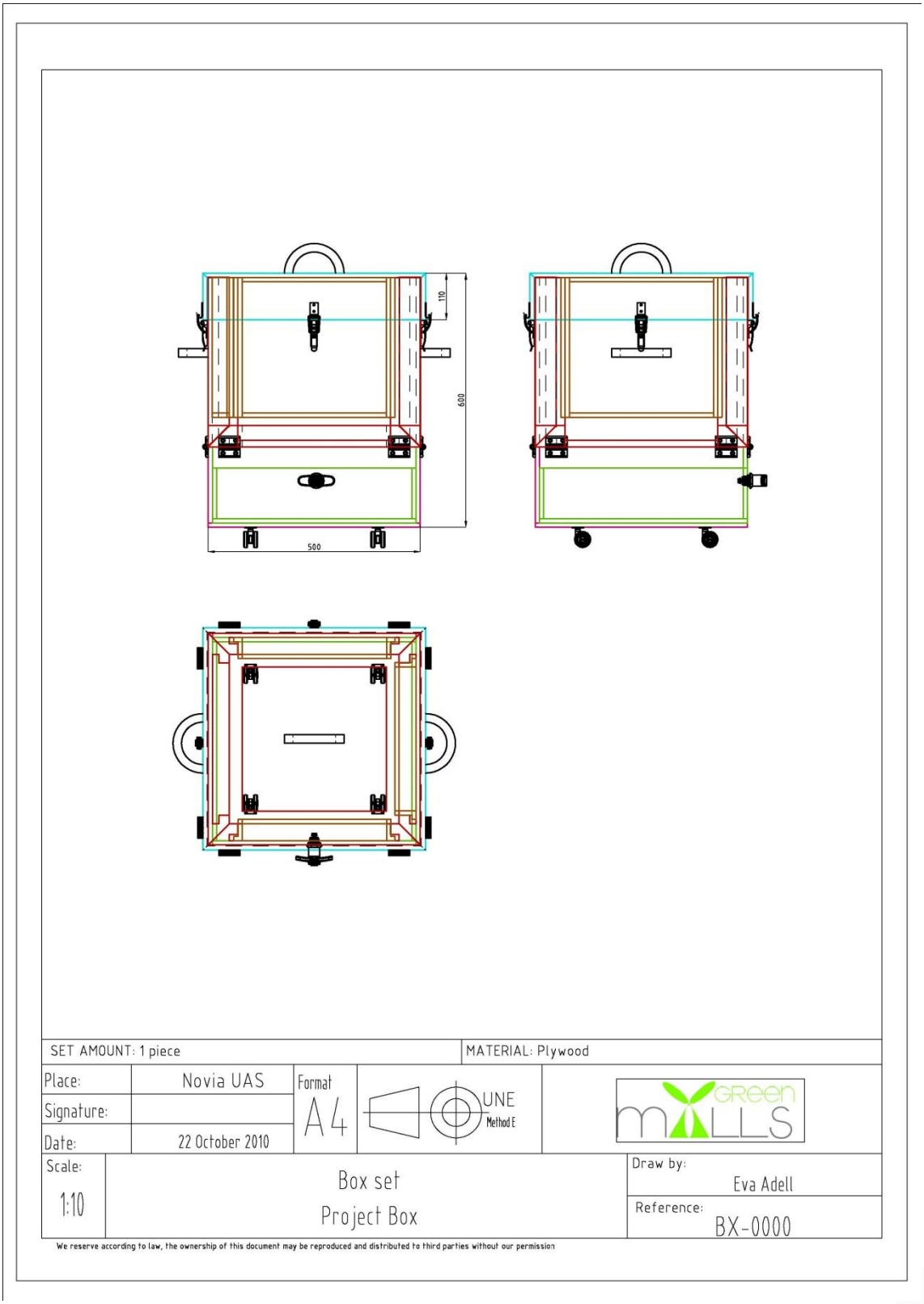

12.8.1.2 Drawing BX-0100 Drawer

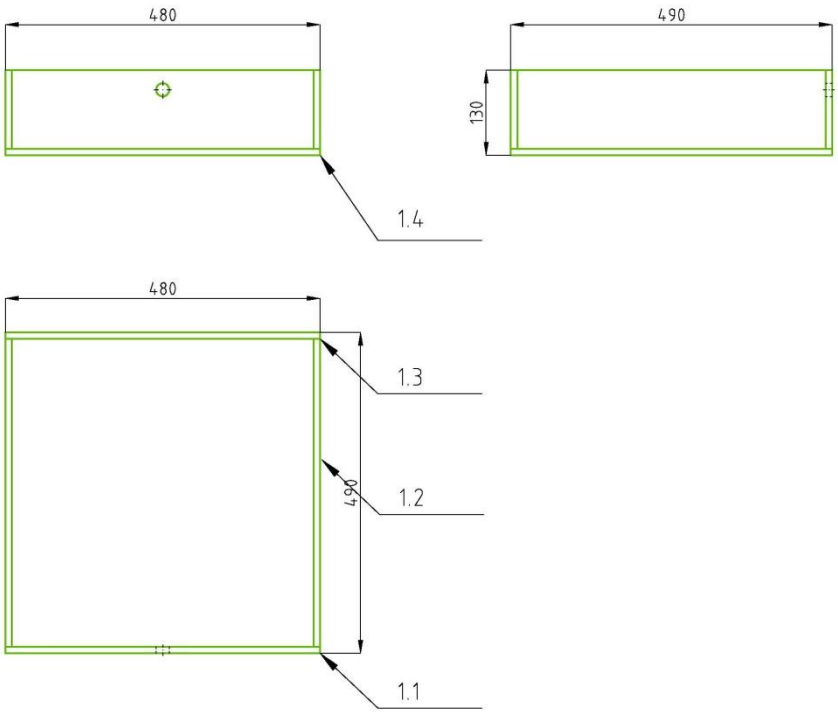

POS.	COMPOSITION	QUANT.	REFERENCE	MATERIAL	COMMENTS
1.4	Basis drawer	1	BX-0104	Plywood	-
1.3	Back drawer	1	BX-0103	Plywood	-
1.2	Lateral drawer	2	BX-0102	Plywood	-
1.1	Front drawer	1	BX-0101	Plywood	-

SET AMOUNT: 1 piece | MATERIAL: -

Place:	Novia UAS	Format A4	UNE Method E
Signature:			
Date:	22 October 2010		
Scale: 1:8	Drawer Project Box	Draw by: Eva Adell	
		Reference: BX-0100	

12.8.1.3 BX-0101 Front drawer

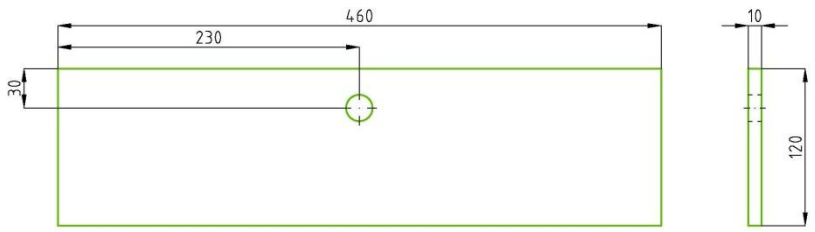

SET AMOUNT: 1 pieces		MATERIAL: Plywood	REFERENCE: BX-0100
Place:	Novia UAS	Format A4	UNE Method E
Signature:			
Date:	22 October 2010		
Scale: 1:4	Front drawer Project box	Draw by: Eva Adell	
		Reference: BX-0101	

12.8.1.4 BX-0102 Lateral drawer

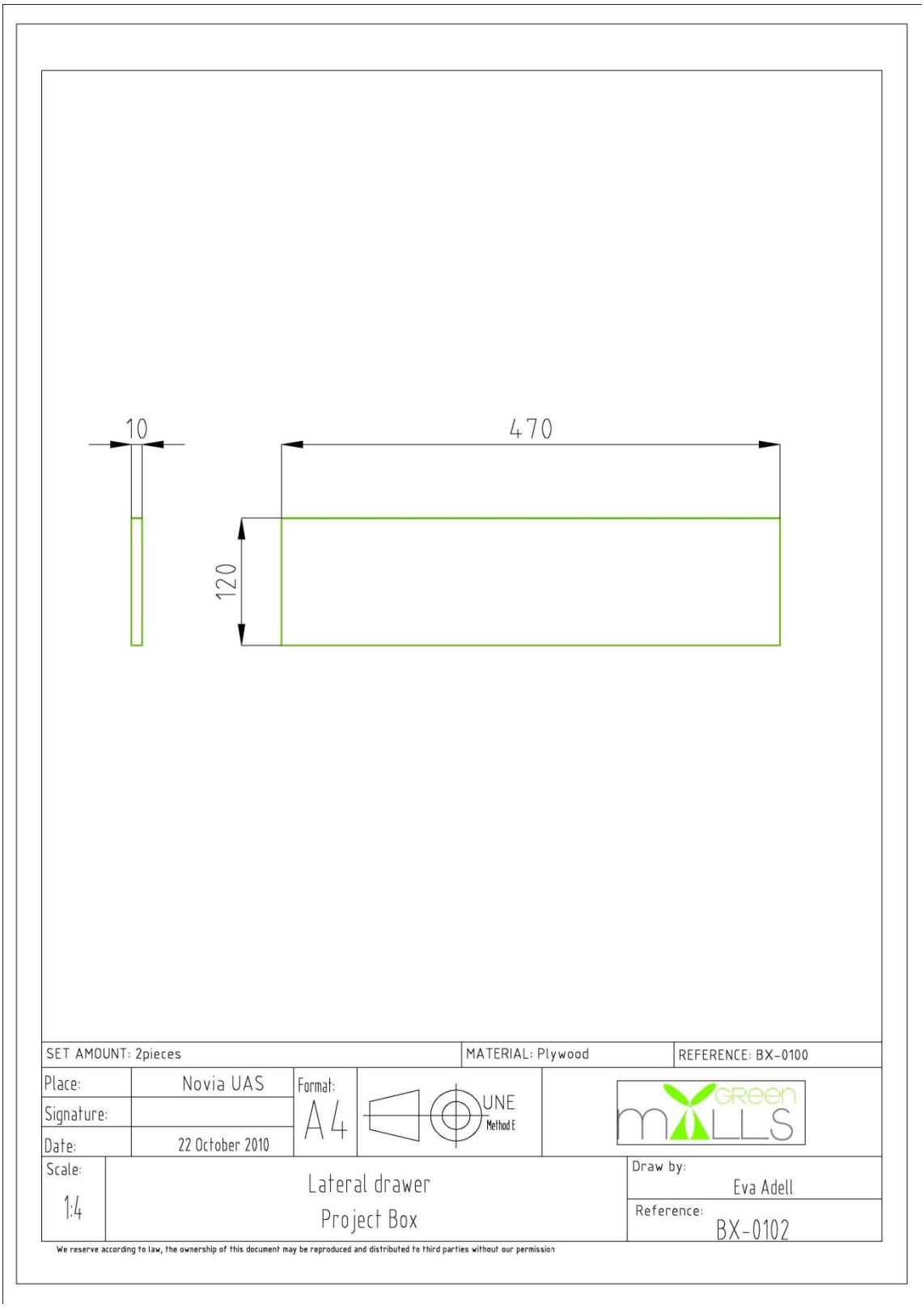

12.8.1.5 BX-0103 Back drawer

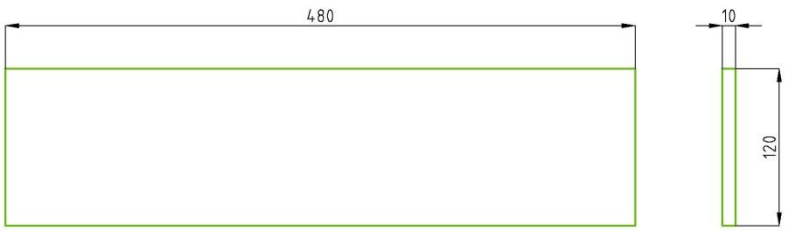

SET AMOUNT: 2 pieces		MATERIAL: Plywood	REFERENCE: BX-0100
Place:	Novia UAS	Format A4	UNE Method E
Signature:			
Date:	22 October 2010		
Scale: 1:4	Part 3 drawer Back drawer	Draw by: Eva Adell	
		Reference: BX-0103	

12.8.1.6 BX-0104 Basis drawer

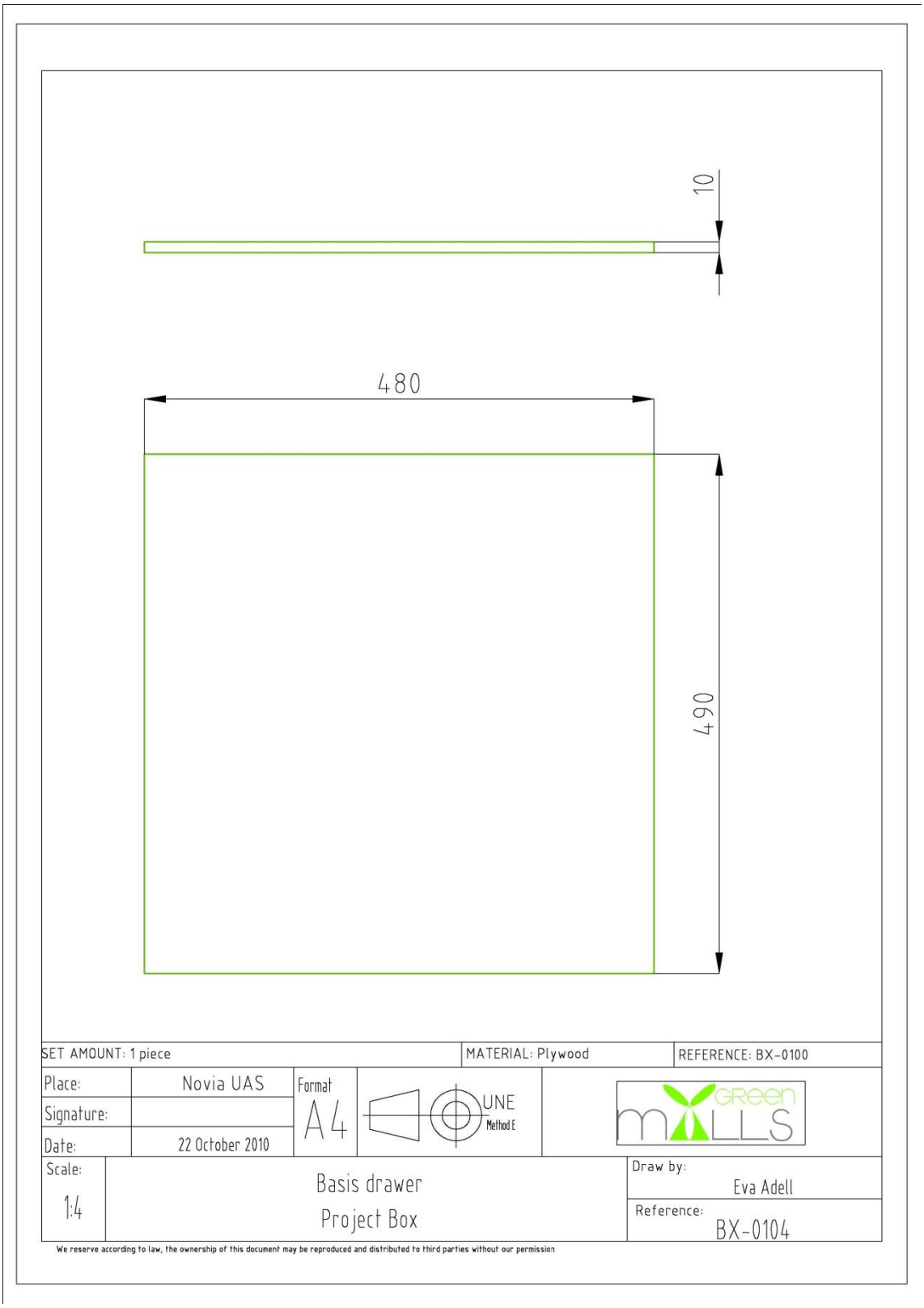

12.8.1.7 BX-0200 Side box

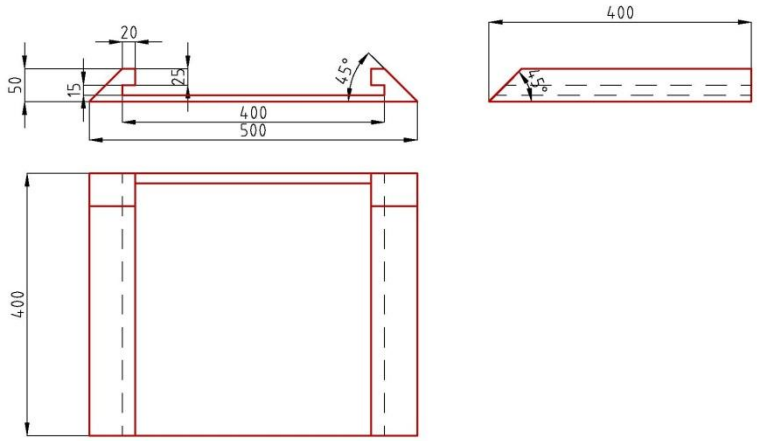

SET AMOUNT: 4 pieces		MATERIAL: Plywood	
Place:	Novia UAS	Format: A4	UNE Method E
Signature:			
Date:	22 October 2010		
Scale: 1:8	Side box Project Box	Draw by: Eva Adell Reference: BX-0200	

12.8.1.8 BX-0300 Box basis

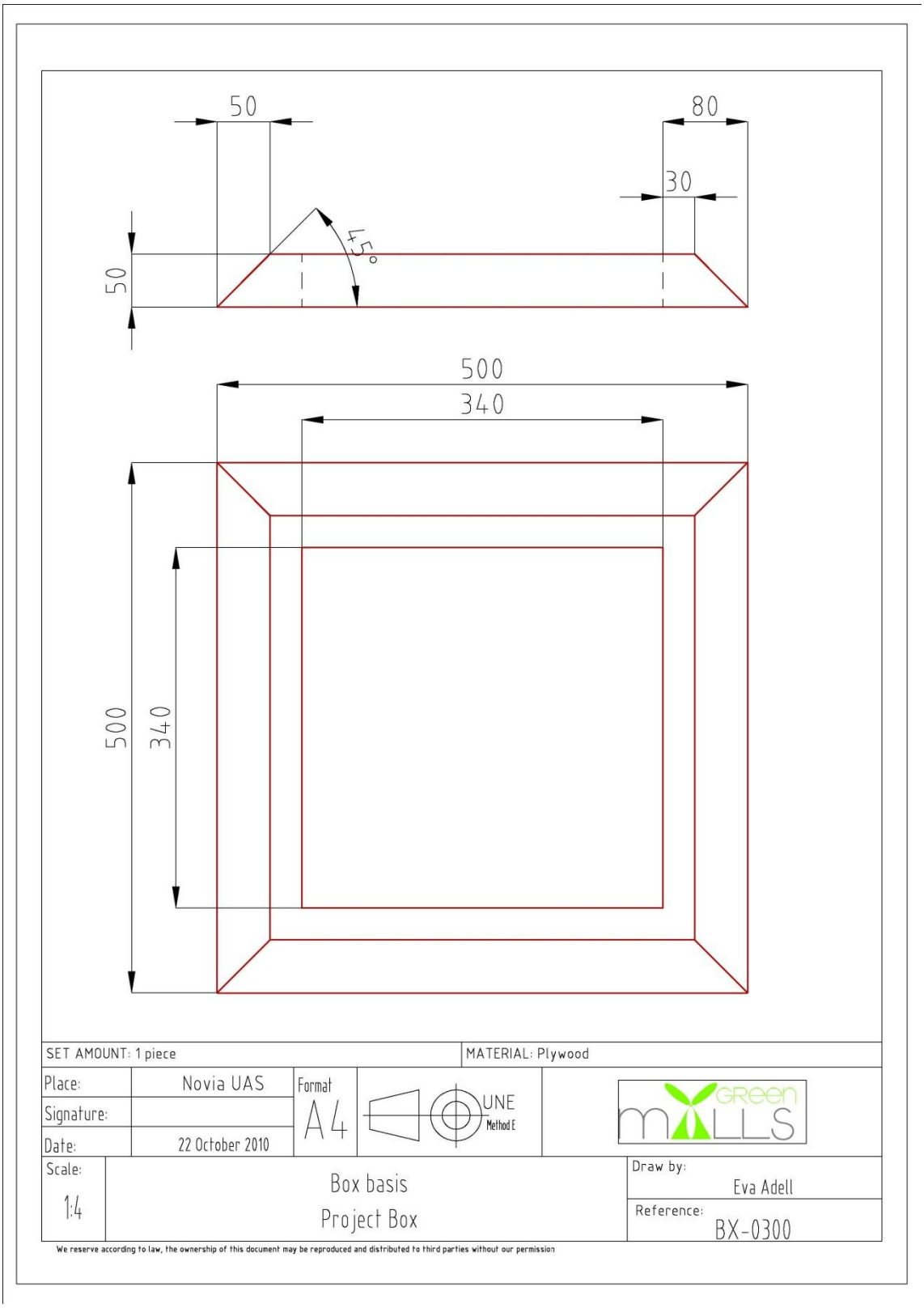

12.8.1.9 BX-0400 Support drawer

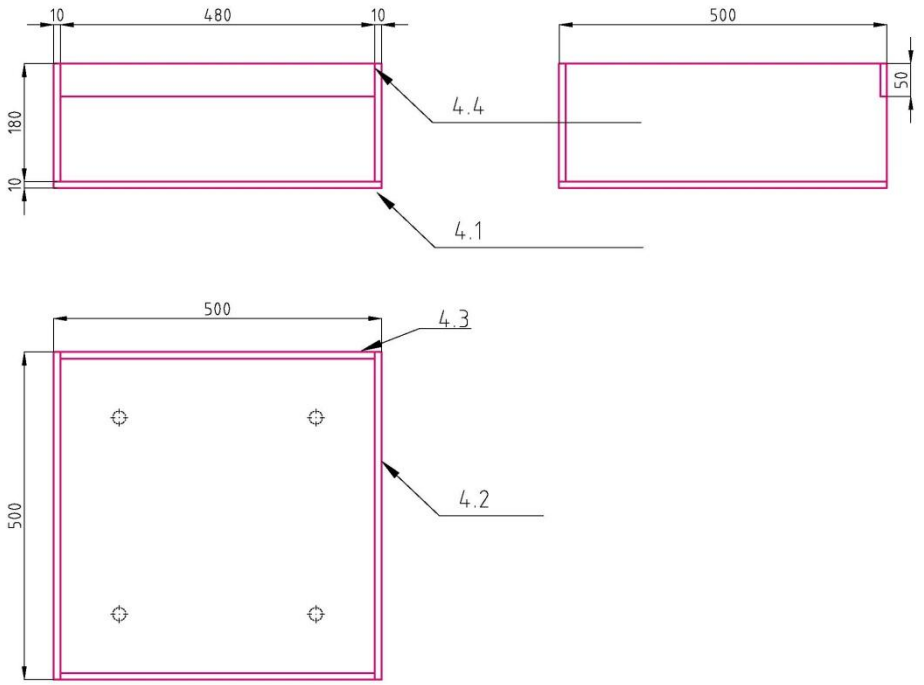

POS.	COMPOSITION	QUANT.	REFERENCE	MATERIAL	COMMENTS
4.4	Support drawer box	1	BX-0404	Plywood	-
4.3	Back support drawer	1	BX-0403	Plywood	-
4.2	Lateral support drawer	2	BX-0402	Plywood	-
4.1	Basis support drawer	1	BX-0401	Plywood	-

SET AMOUNT: 1 Piece | MATERIAL: -

Place:	Novia UAS	Format A4	UNE Method E
Signature:			
Date:	22 October 2010		
Scale: 1:8	Support drawer Project Box	Draw by: Eva Adell	
		Reference: BX-0400	

12.8.1.10 BX-0401 Basis support drawer

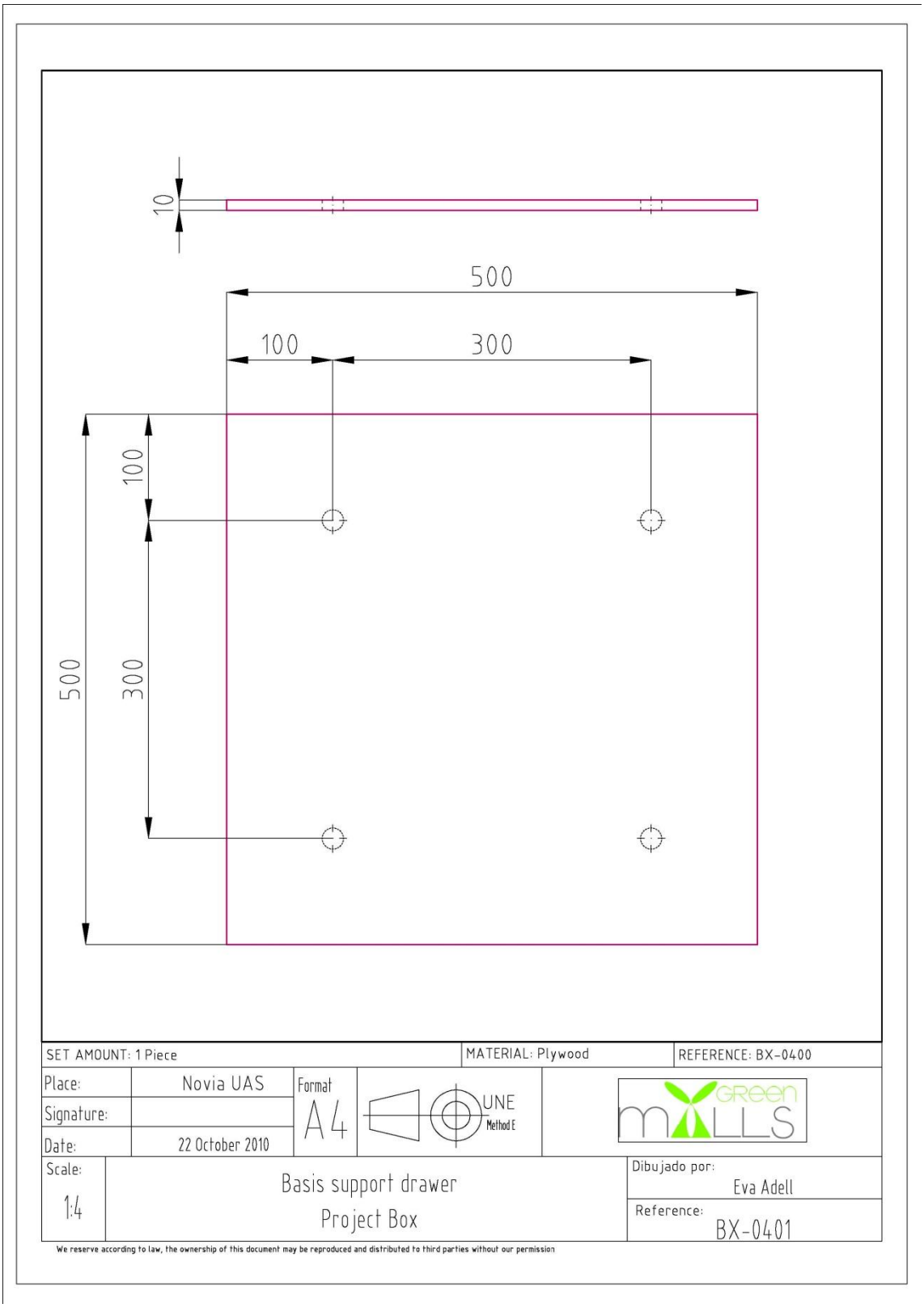

12.8.1.11 BX-0402 Lateral support drawer

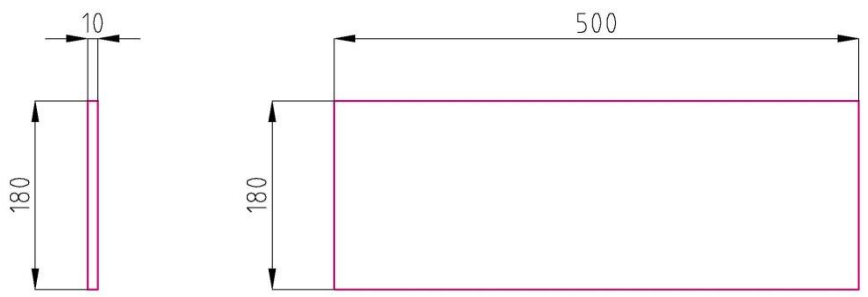

SET AMOUNT: 2 pieces		MATERIAL: Plywood	REFERENCE: BX-0400
Place:	Novia UAS	Format: A4	UNE Method E
Signature:			
Date:	22 October 2010		
Scale: 1:5	Lateral support drawer Project Box	Draw by: Eva Adell	
		Reference: BX-0402	

12.8.1.12 BX-0403 Back support drawer

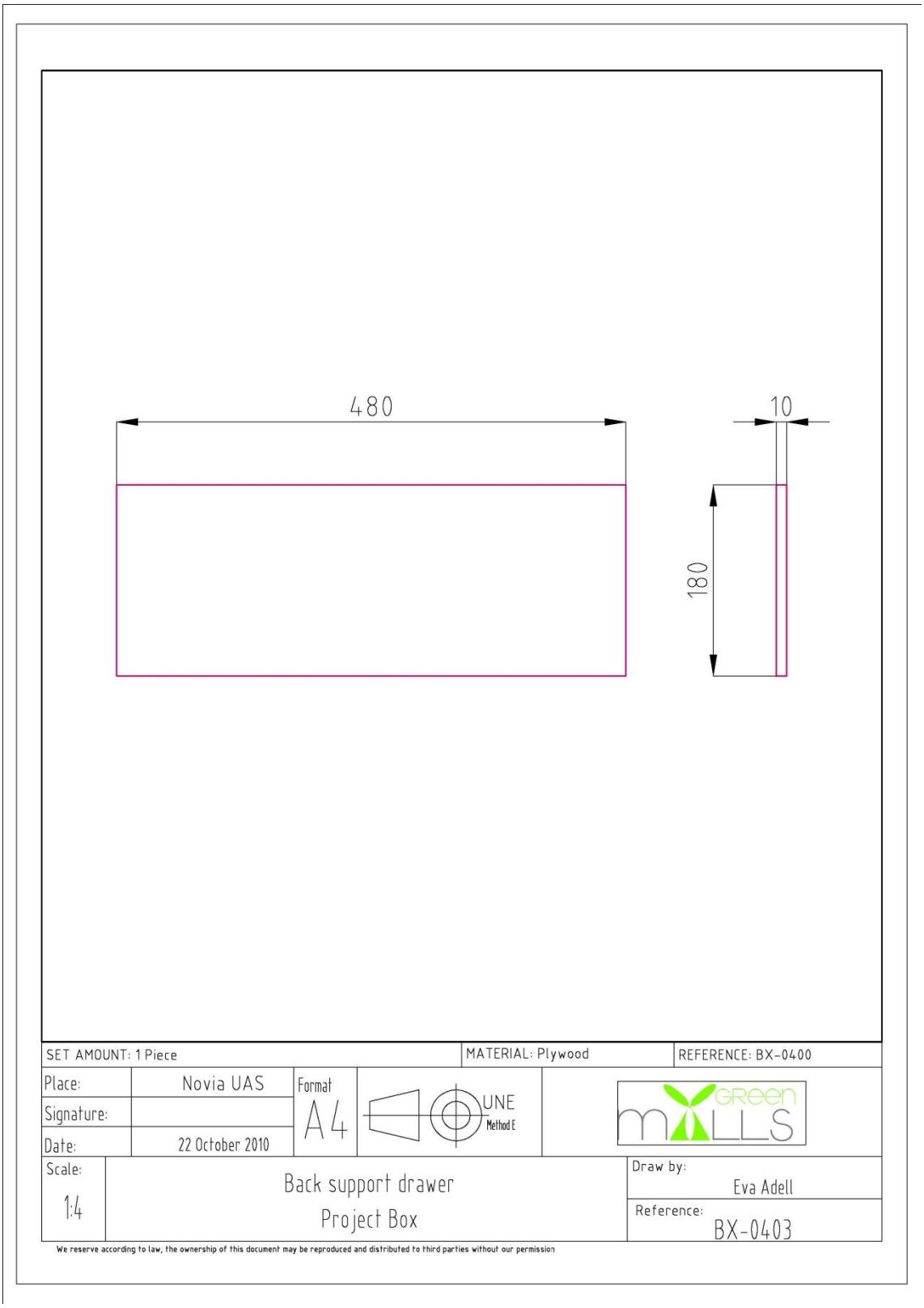

12.8.1.13 BX-0404 Front support drawer

SET AMOUNT: 1 Piece			MATERIAL: Plywood	
Place:	Novia UAS	Format A4	UNE Method E	GREEN MILLS
Signature:				
Date:	22 October 2010			
Scale: 1:4	Support drawer front Project Box		Draw by: Eva Adell Reference: BX-0404	

12.8.1.14 BX-0500 Box cover

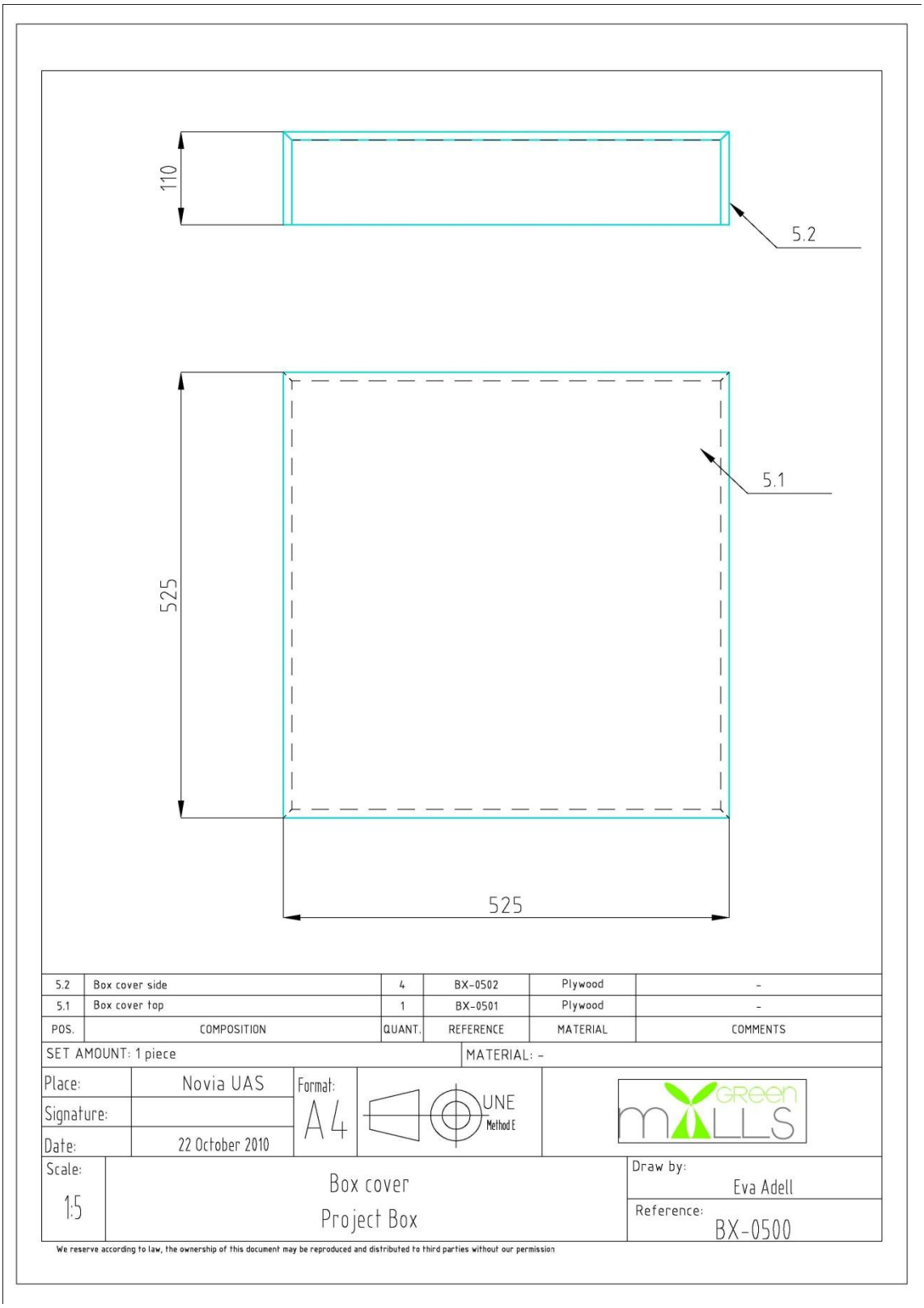

12.8.1.15 BX-0501 Box cover top

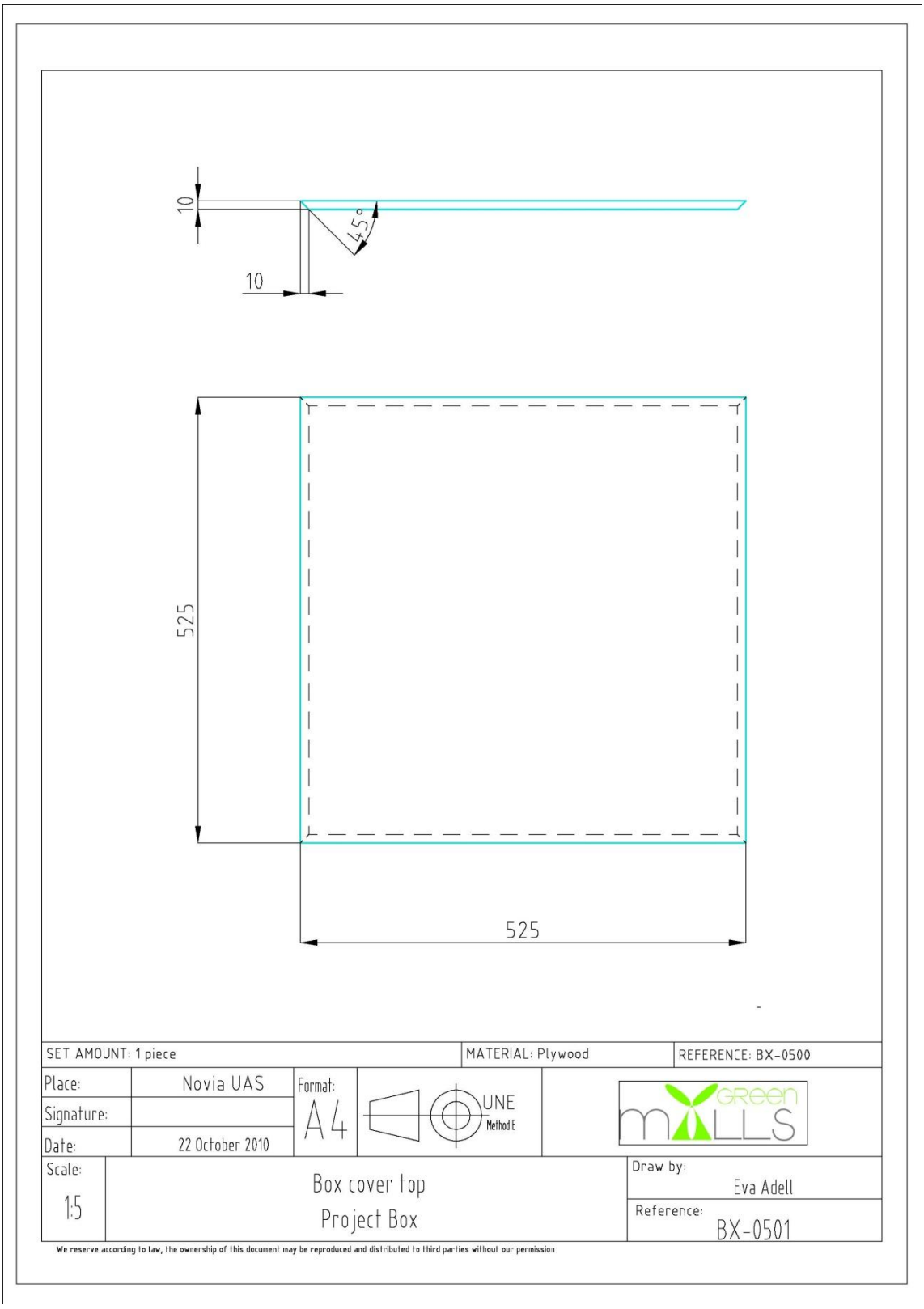

12.8.1.16 BX-0502 Box cover side

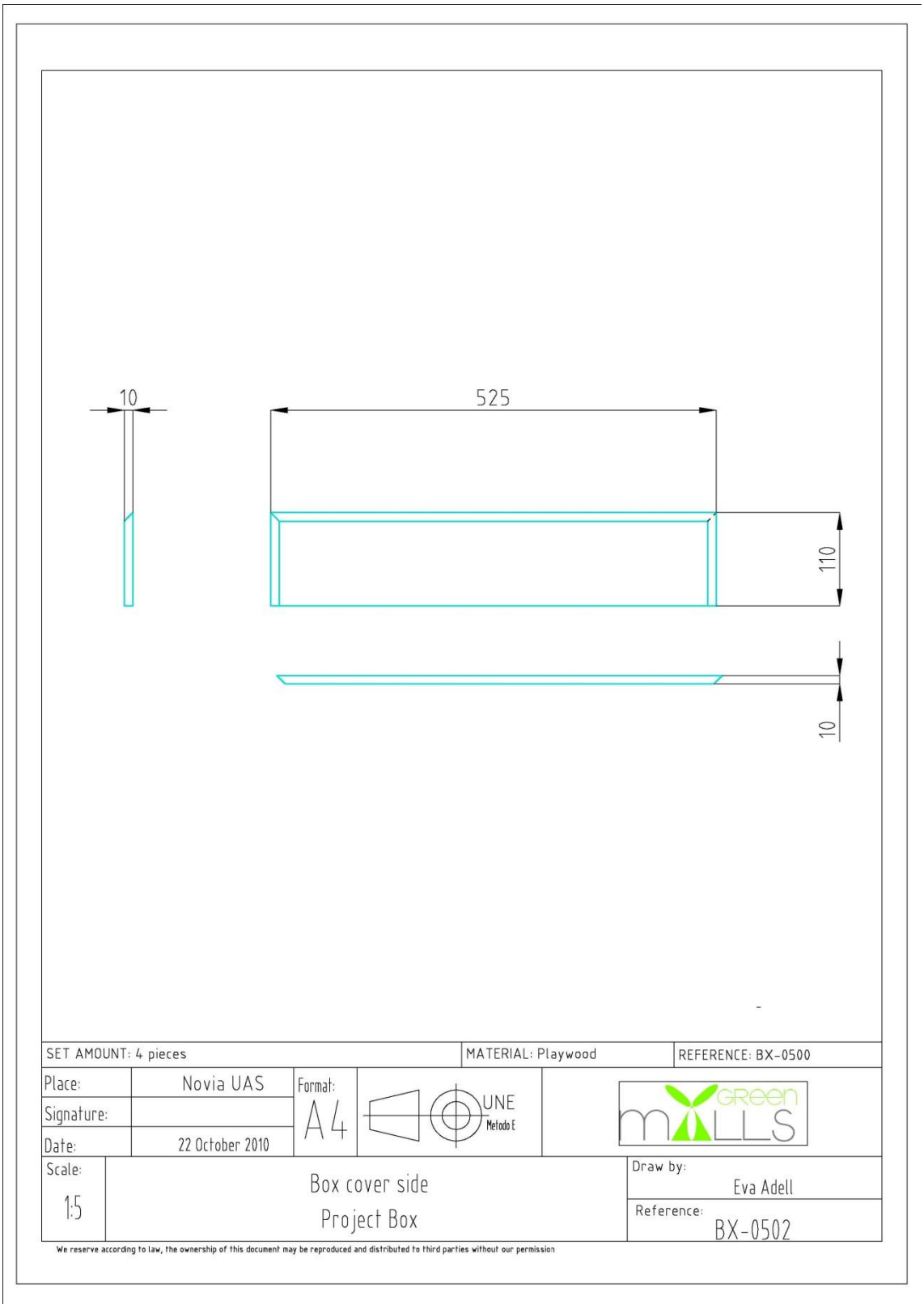

12.8.1.17 BX-0600 Modules

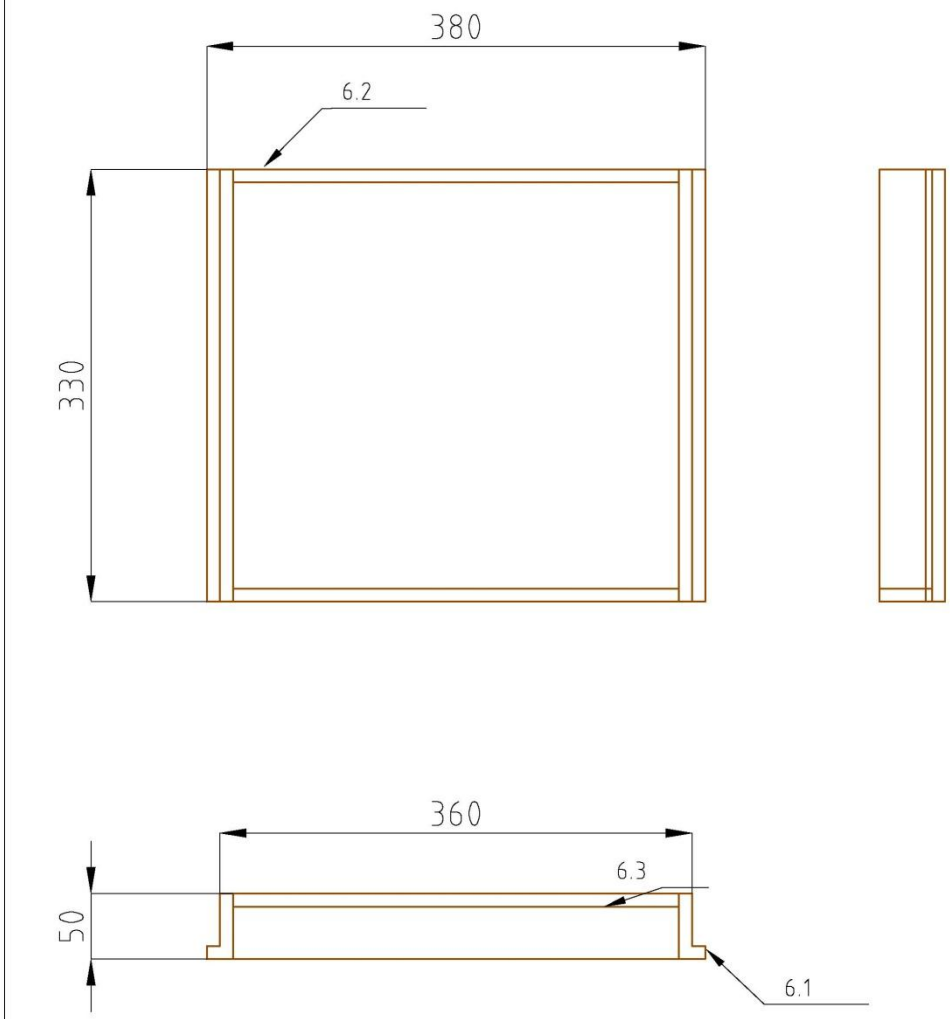

POS.	COMPOSICIÓN	CANT.	REFERENCE	MATERIAL	COMMENTS
6.3	Basis modules	3	BX-0603	Plywood	-
6.2	Front and back modules	6	BX-0602	Plywood	-
6.1	Side modules	6	BX-0601	Plywood	-

SET AMOUNT: 3pieces | MATERIAL: -

Sust a:	Novia UAS	Format: A4	UNE Method E
Signature:			
Date:	22 October 2010		
Scale: 1:4	Modules Project Box	Draw by: Eva Adell	
		Reference: BX-0600	

12.8.1.18 BX-0601 Side modules

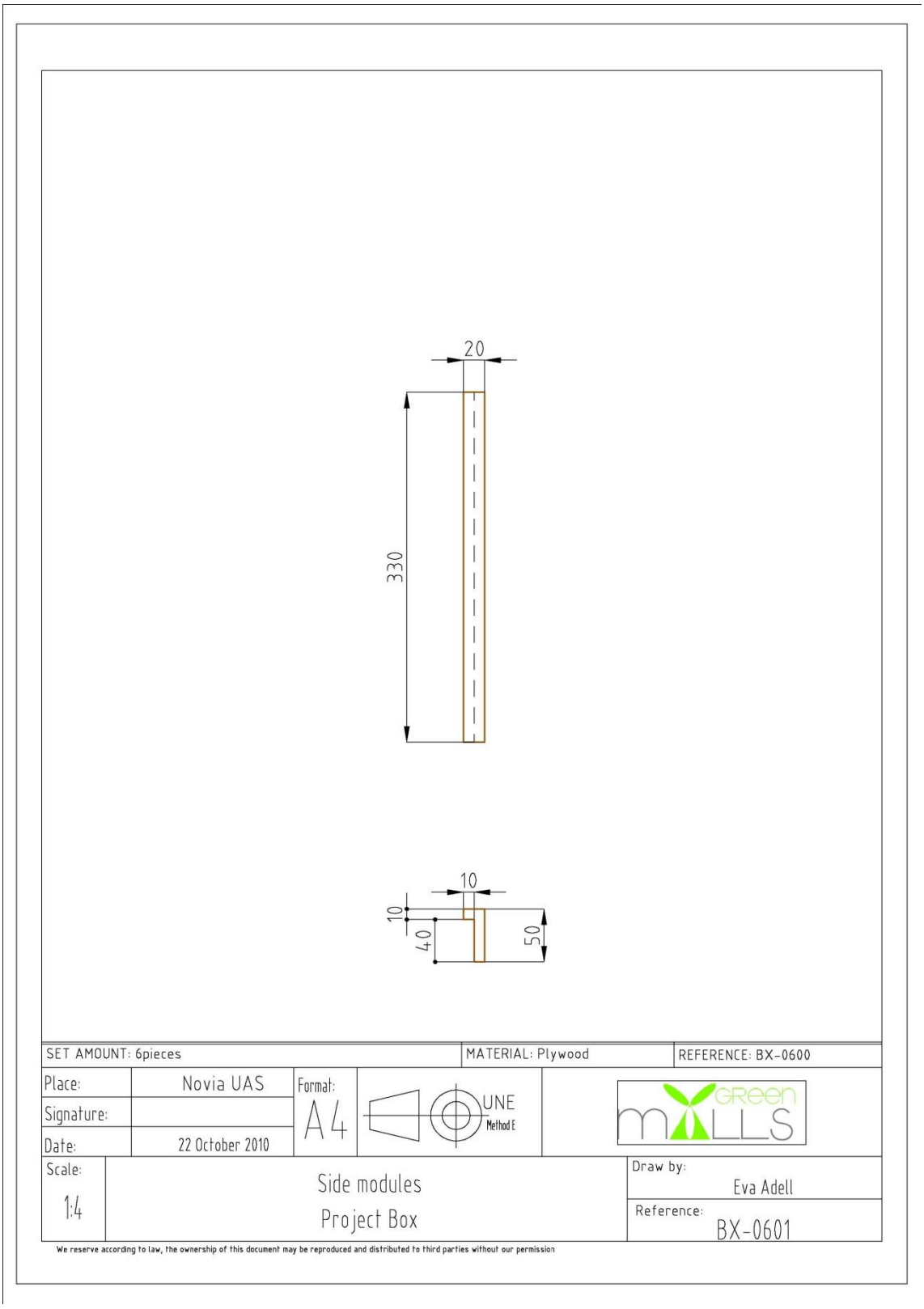

12.8.1.19 BX-0602 Front and back modules

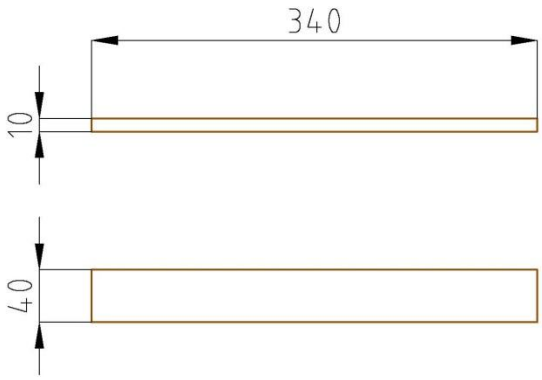

SET AMOUNT: 6 pieces		MATERIAL: Plywood	REFERENCE: BX-0600
Place:	Novia UAS	Format: A4	UNE Method E
Signature:			
Date:	22 October 2010		
Scale 1:4	Front and back Project Box	Draw by: Eva Adell	
		Reference: BX-0602	

12.8.1.20 BX-0603 Basis modules

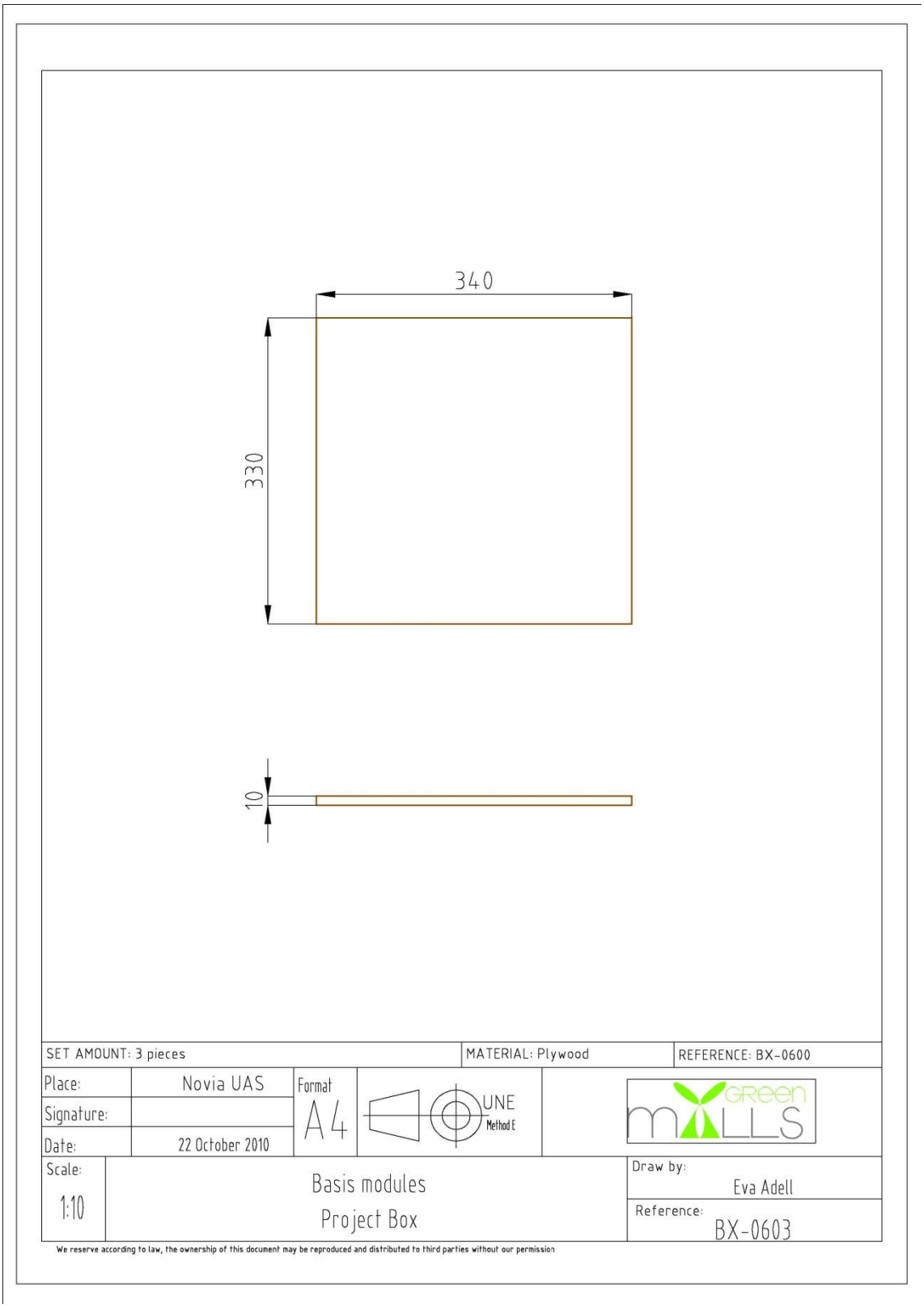

12.8.1.21 BX-0700 Central module

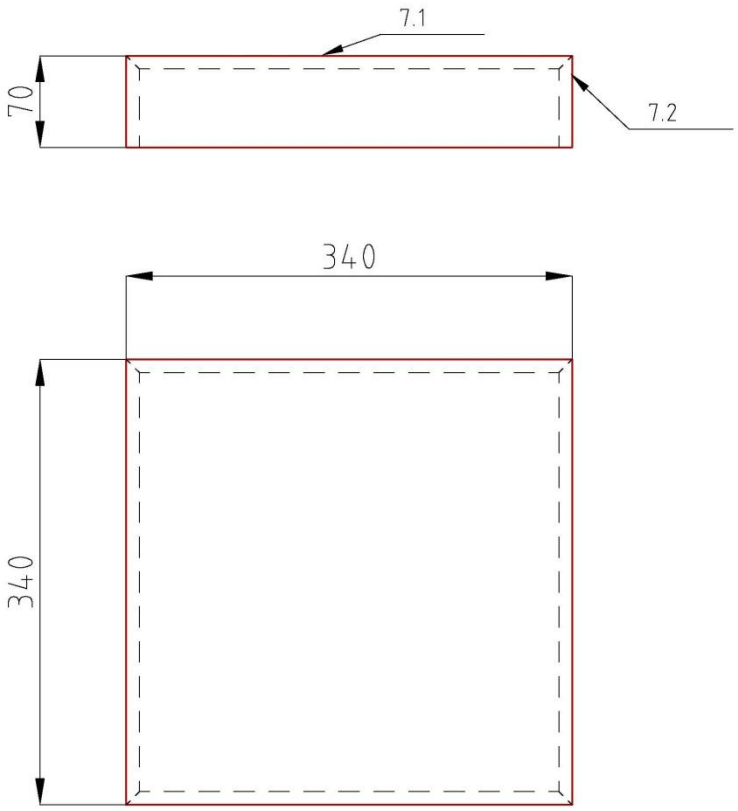

7.2	Side central module	4	BX-0702	Plywood	-
7.1	Top central module	1	BX-0701	Plywood	-

SET AMOUNT: 1 piece | MATERIAL: Plywood

Place:	Novia UAS	Format A4	UNE Method E
Signature:			
Date:	22 October 2010		
Scale: 1:4	Central module Project Box	Draw by: Eva Adell	
		Reference: BX-0700	

12.8.1.22 BX-0701 Top central module

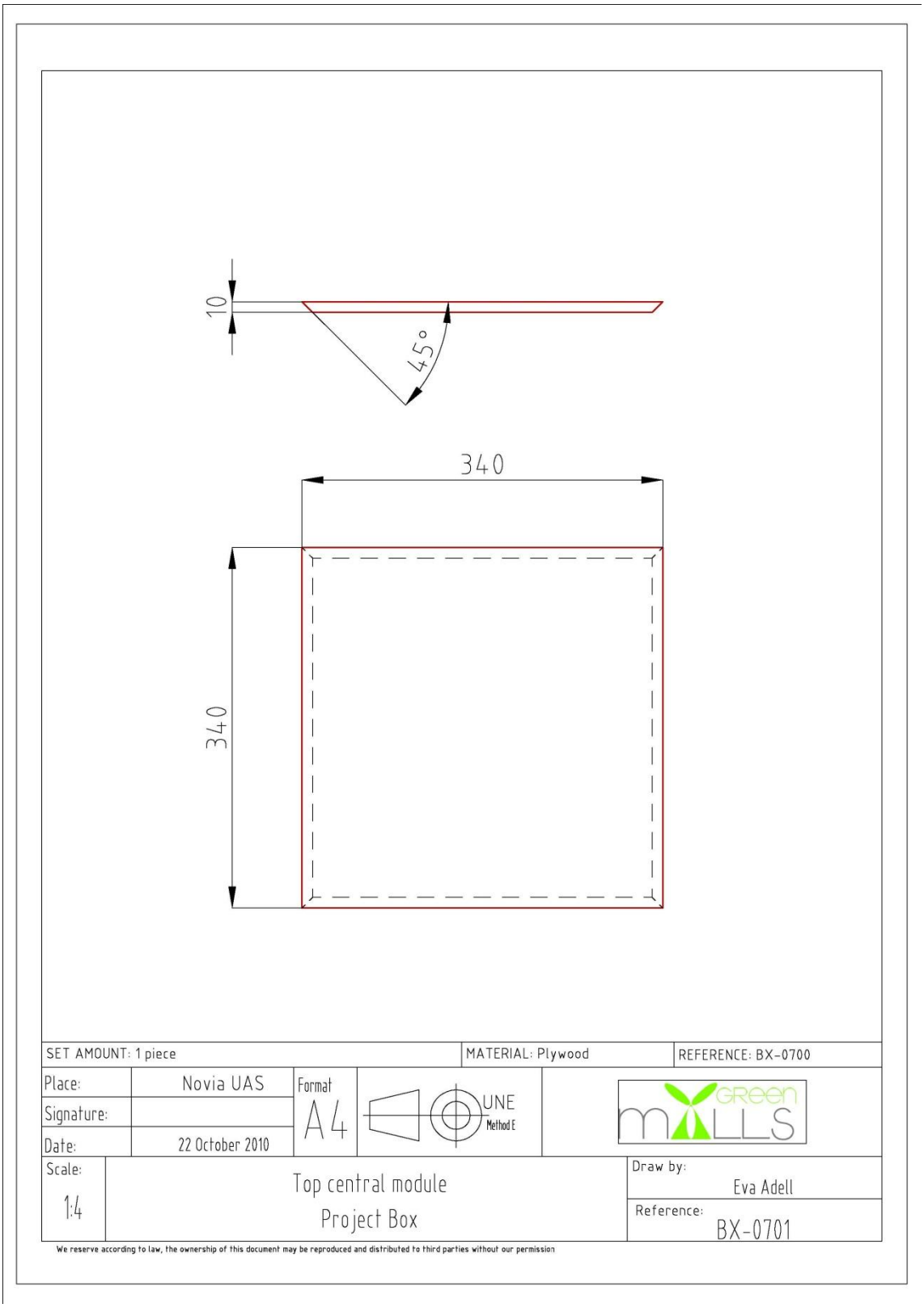

12.8.1.23 BX-0702 Side central module

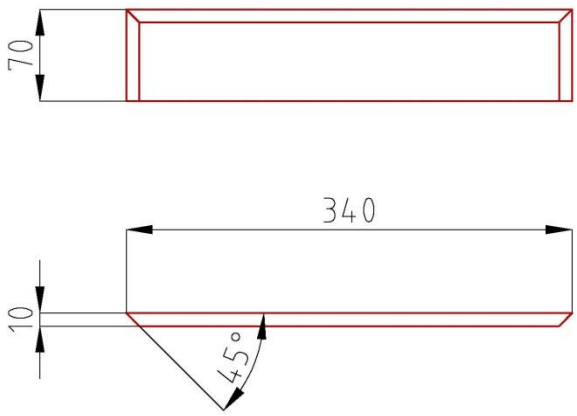

SET AMOUNT: 4 piece		MATERIAL: Plywood	REFERENCE: BX-0700
Place:	Novia UAS	Format A4	UNE Method E
Signature:			
Date:	22 October 2010		
Scale: 1:4	Side central module Project Box	Draw by: Eva Adell	
		Reference: BX-0702	

12.8.2 Calculation of the weight of the box;

Calculating the weight of the box

To calculate the weight of the box, first of all we have to know the density of the material that we used for. In our case, Kenneth said us that the density of the plywood is 420 kg/$m^{3.}$.

With this data, we proceed to calculate each of the parties forming the box.

To calculate the weight we divide each piece and calculate the volume separetly nad after we will multiply the volum x density.

The drawer

To calculate the weight we divide each piece and calculate the volume separetly nad after we will multiply the volum x density.

460 x 120 x 10 = 552000 mm^3

2 x 490 x 120 x 10 = 1176000 mm^3

480 x 490 x 10 = 2352000 mm^3

Total = 4,632 x 10^{-3} m^3

M= ρ x V = 420 kg/ m^3 x 4,632 x 10^{-3} = 1,94 kg

Side Box (4 pieces)

To calculate this part we separate were the module is in three parts:

8 triangles = 4 x10^6 mm^3

8 squares = 1,6 x 10^6 mm^3

8 rectangles = 6,4 x 10^6 mm^3

Total = 1,2 x 10^{-5} mm^3

M = 420 kg/ m^3 x 1,2 x 10^{-5} = 5,04 kg

Box Basis

500x 500 x 5 = 1250000 mm^3

340 x 340 x 5 = 672000 mm^3

Total = 6,72 x 10^{-4} m^3

M= 420 kg/m^3 x 6,72 x 10^{-4} = 0,2822 kg

Suport drawer

500 x 500 x 10 = 2500000 mm^3

180 x 500 x 10 x 2 = 1800000 mm^3

480 x 180 x 10 = 864000 mm^3

480 x 50 x 10 = 240000 mm^3

Total = 5,404 x 10^{-3} m^3

M= 420 kg/m^3 x 5,404 x 10^{-3} = 2,269 kg

Box cover

10 x 525 x 525 = 2756250 mm^3

10 x 525 x 110 x 4 =2310000 mm^3

Total = 5,06625 x 10^{-3} kg

M= 420 kg/m^3 x 5,06625 x 10^{-3} m^3 = 2,12 kg

Total = 1,94 kg + 5,04 kg + 0,2822 kg + 2,269 kg + 2,12 kg= ***11,65kg***

12.8.2 Wind energy

12.8.2.1. BX-1000 Wind energy module

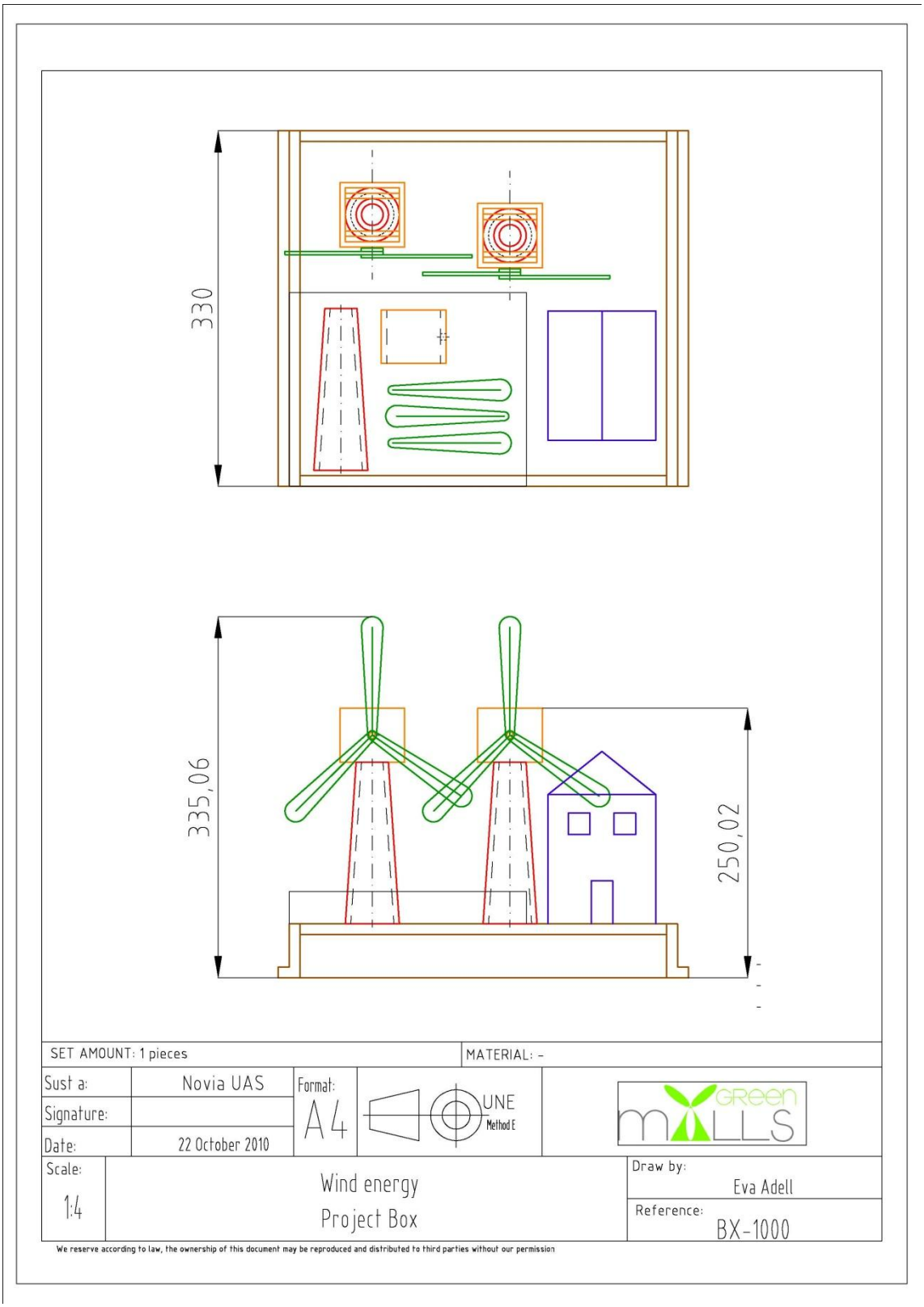

12.8.2.2 BX-1100 Mill

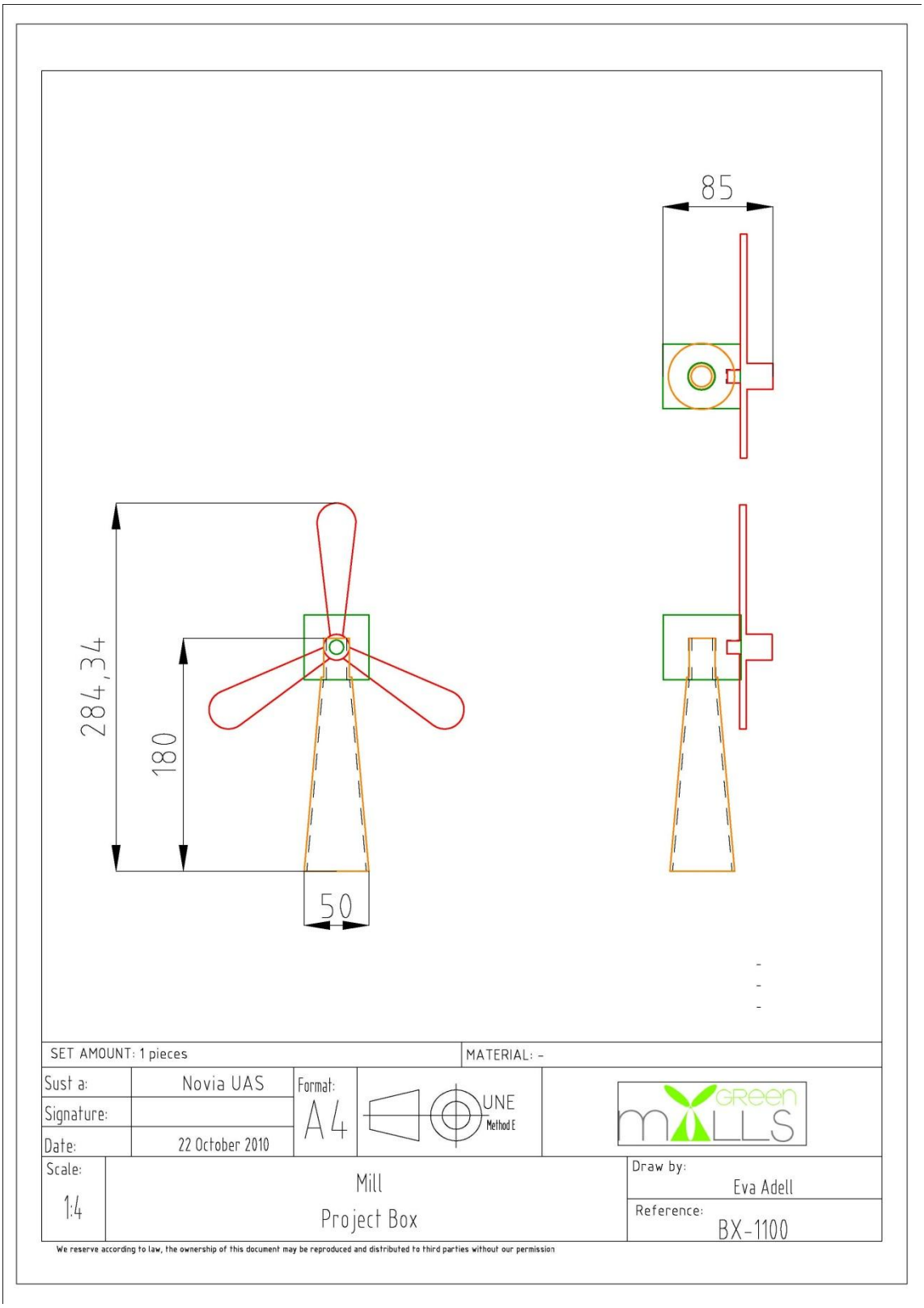

12.8.2.2.1 BX-1101 Basis Mill

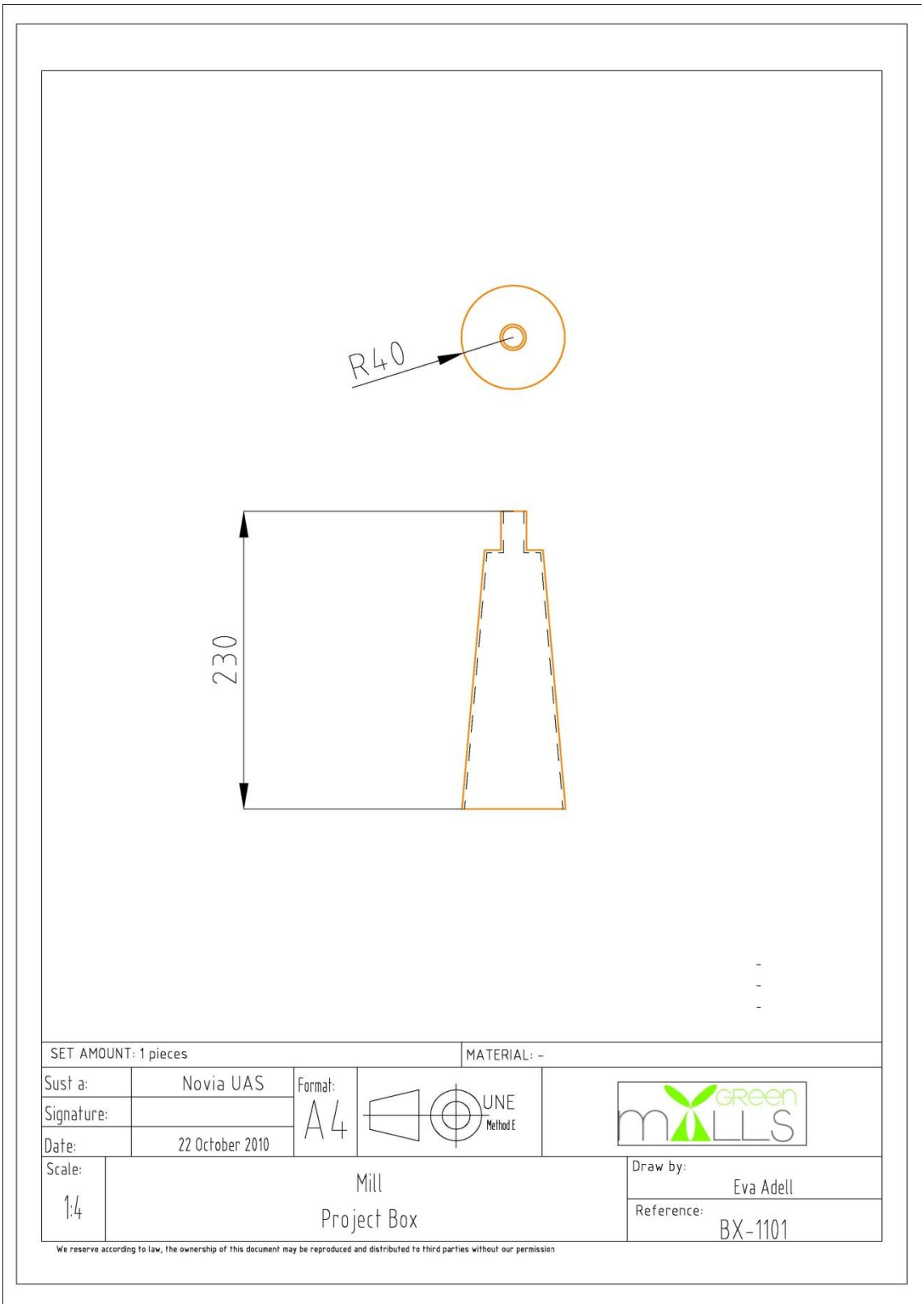

12.8.2.2.2 BX-1102 Nacelle Mill

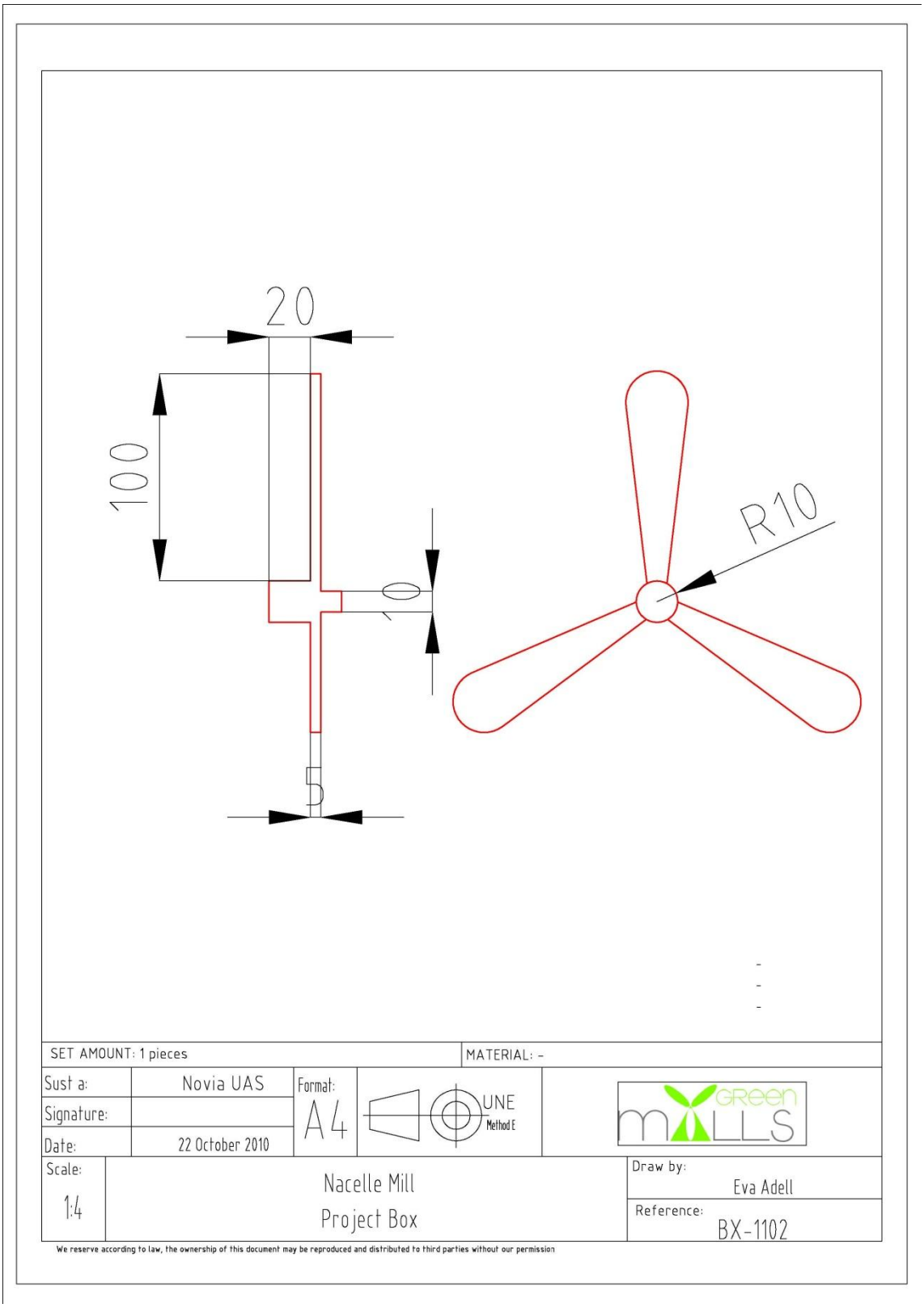

12.8.2.2.3.BX-1103 Generator Mill

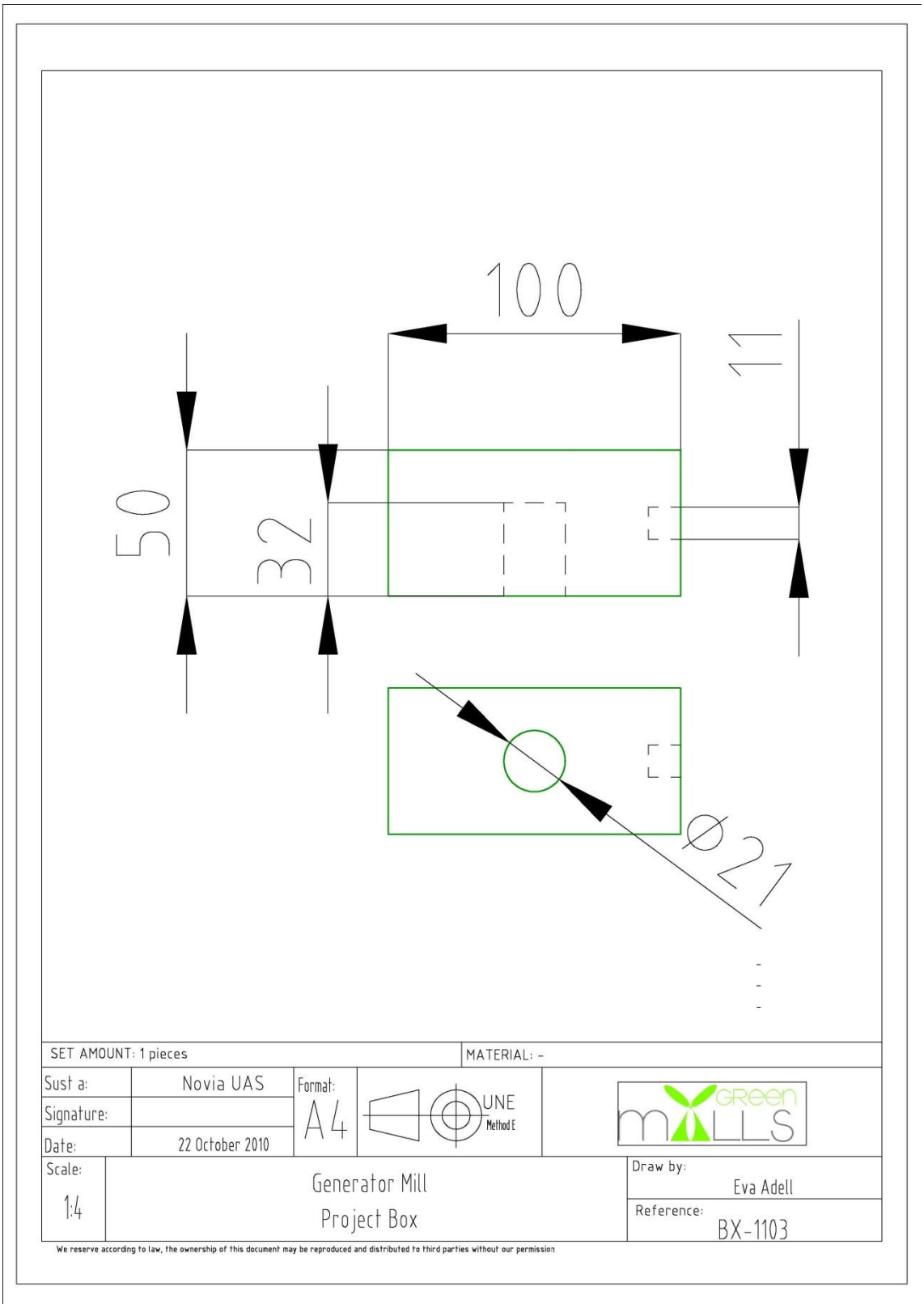

12.8.2.3 BX-1200 House

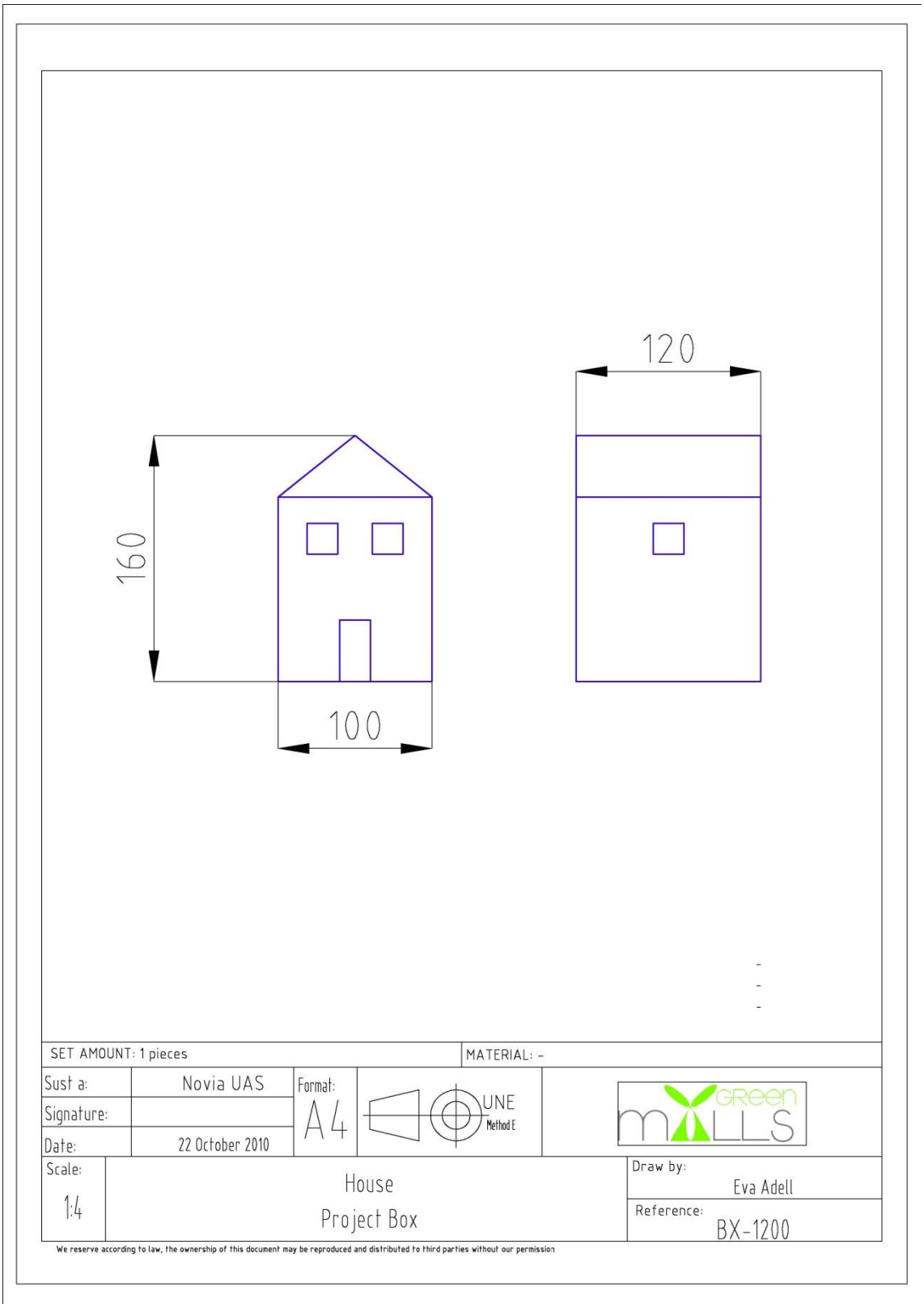

12.8.2.4 BX-1300 Mill game

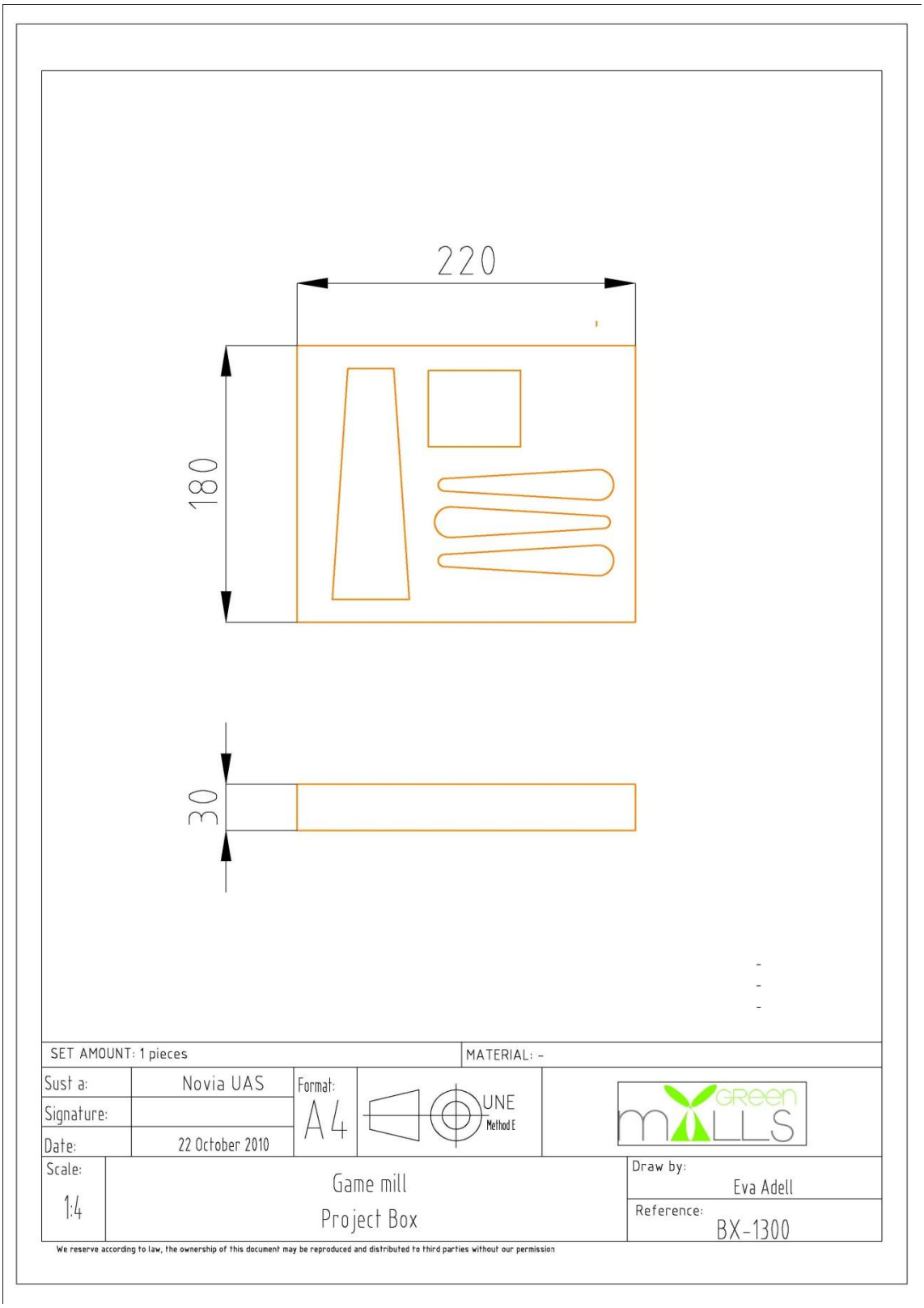

12.8.2.5 BX-1400 Wind energy circuit

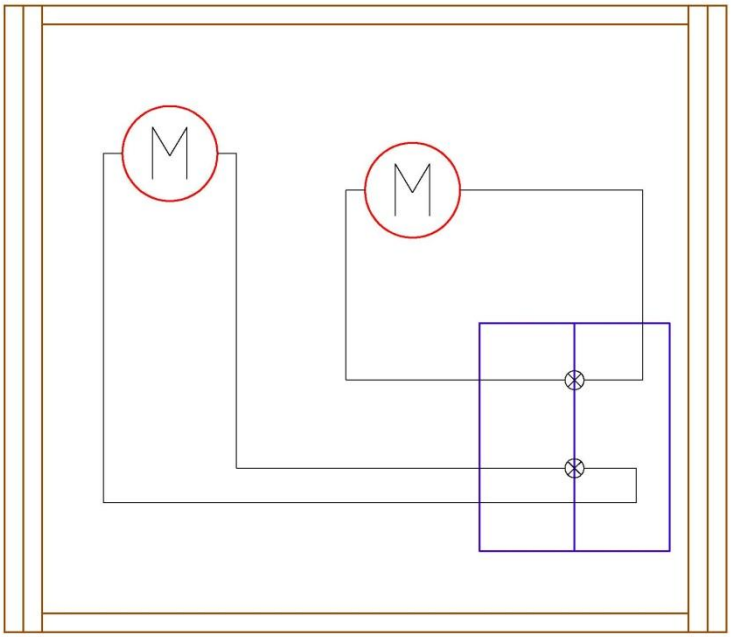

SET AMOUNT: 1 pieces			MATERIAL: -	
Sust a:	Novia UAS	Format: A4	UNE Method E	GREEN MILLS
Signature:				
Date:	22 October 2010			
Scale: 1:4	Wind energy Project Box		Draw by: Eva Adell	
			Reference: BX-1400	

12.8.3 Solar and heating energy

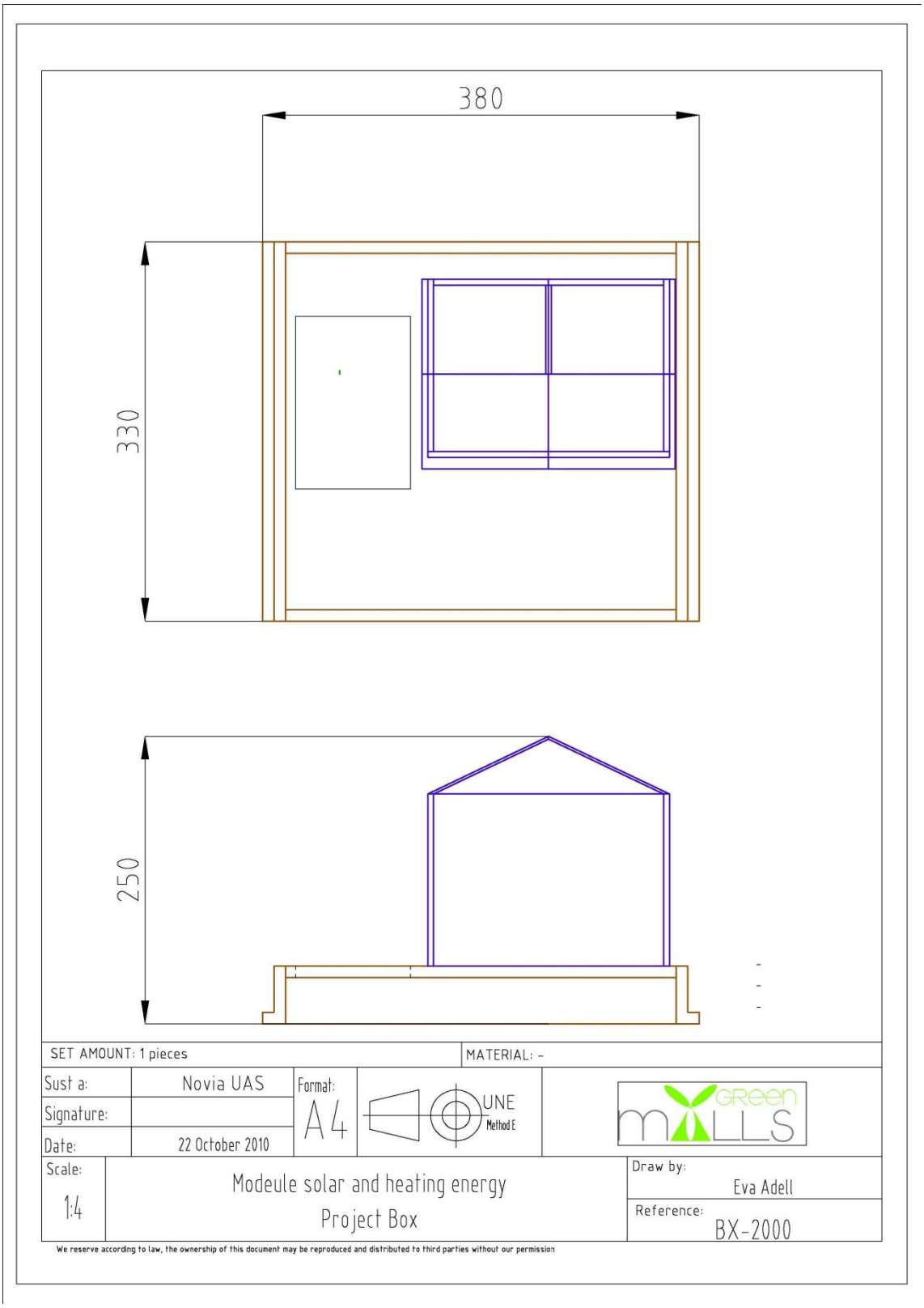

12.8.4 Save energy

12.8.4.1 BX-3000 Save energy module

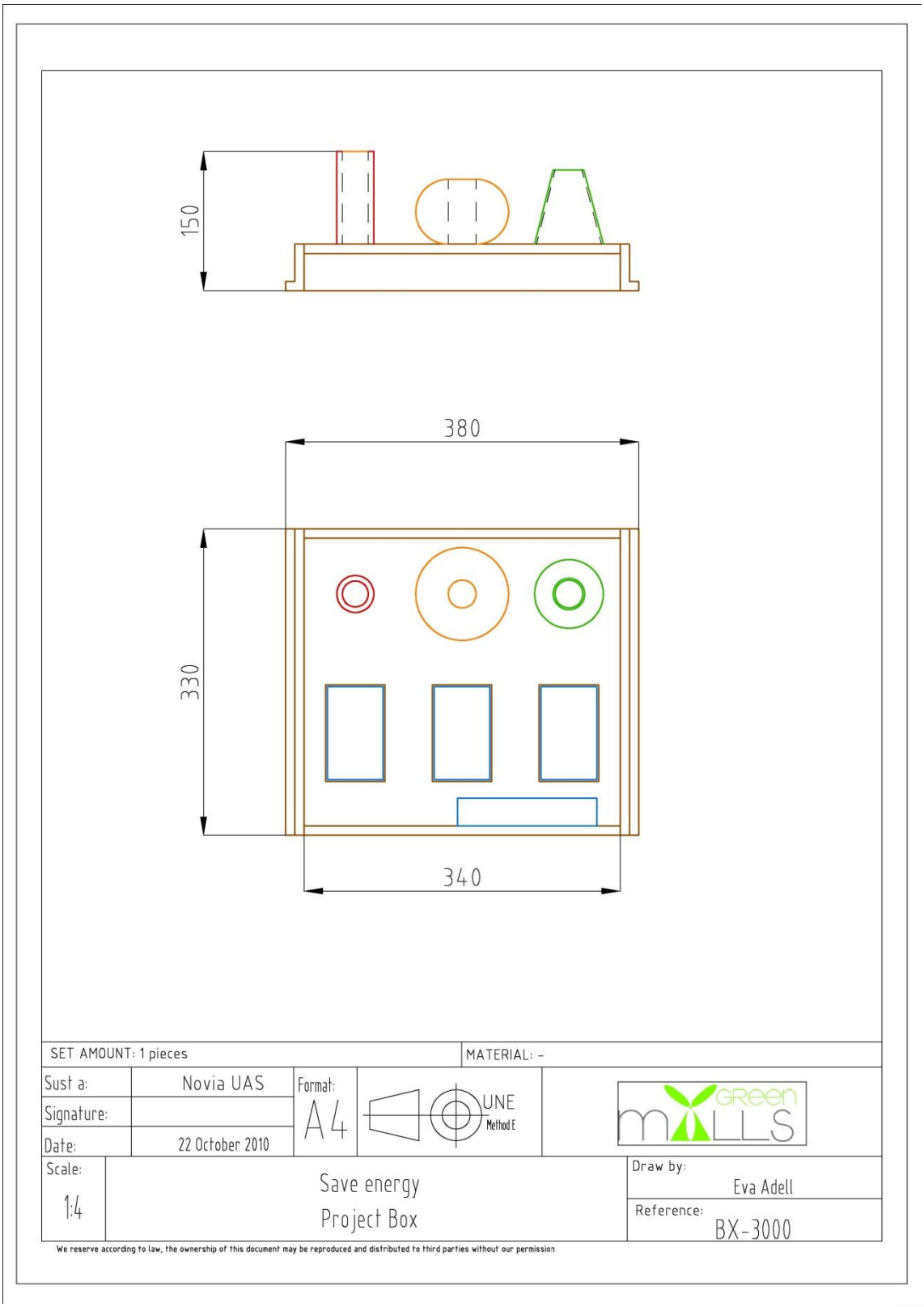

12.8.4.2 BX-3100 Bulbholder 1

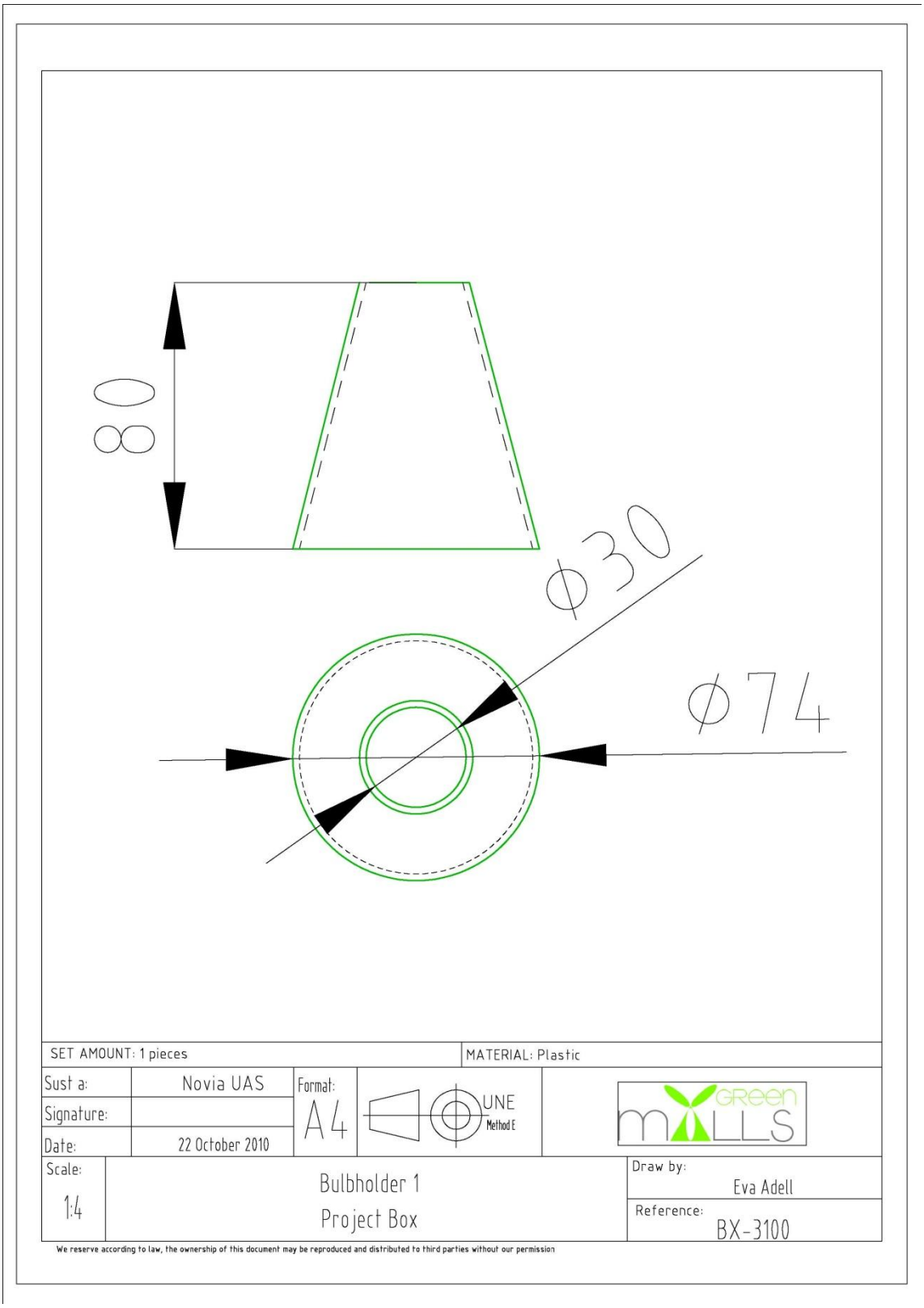

12.8.4.3 BX-3200 Bulbholder 2

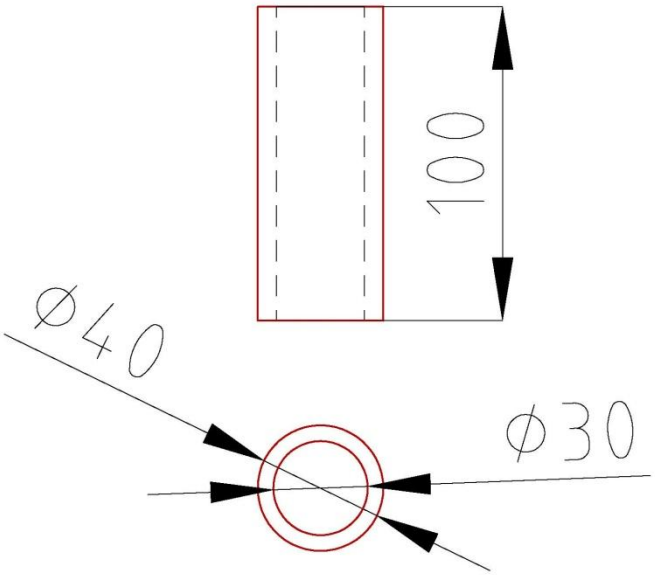

SET AMOUNT: 1 pieces		MATERIAL: Plastic	
Sust a:	Novia UAS	Format: A4	UNE Method E
Signature:			
Date:	22 October 2010		
Scale: 1:4	Bulbholder 2 Project Box	Draw by: Eva Adell	
		Reference: BX-3200	

12.8.4.4 BX-3300 Bulbholder 3

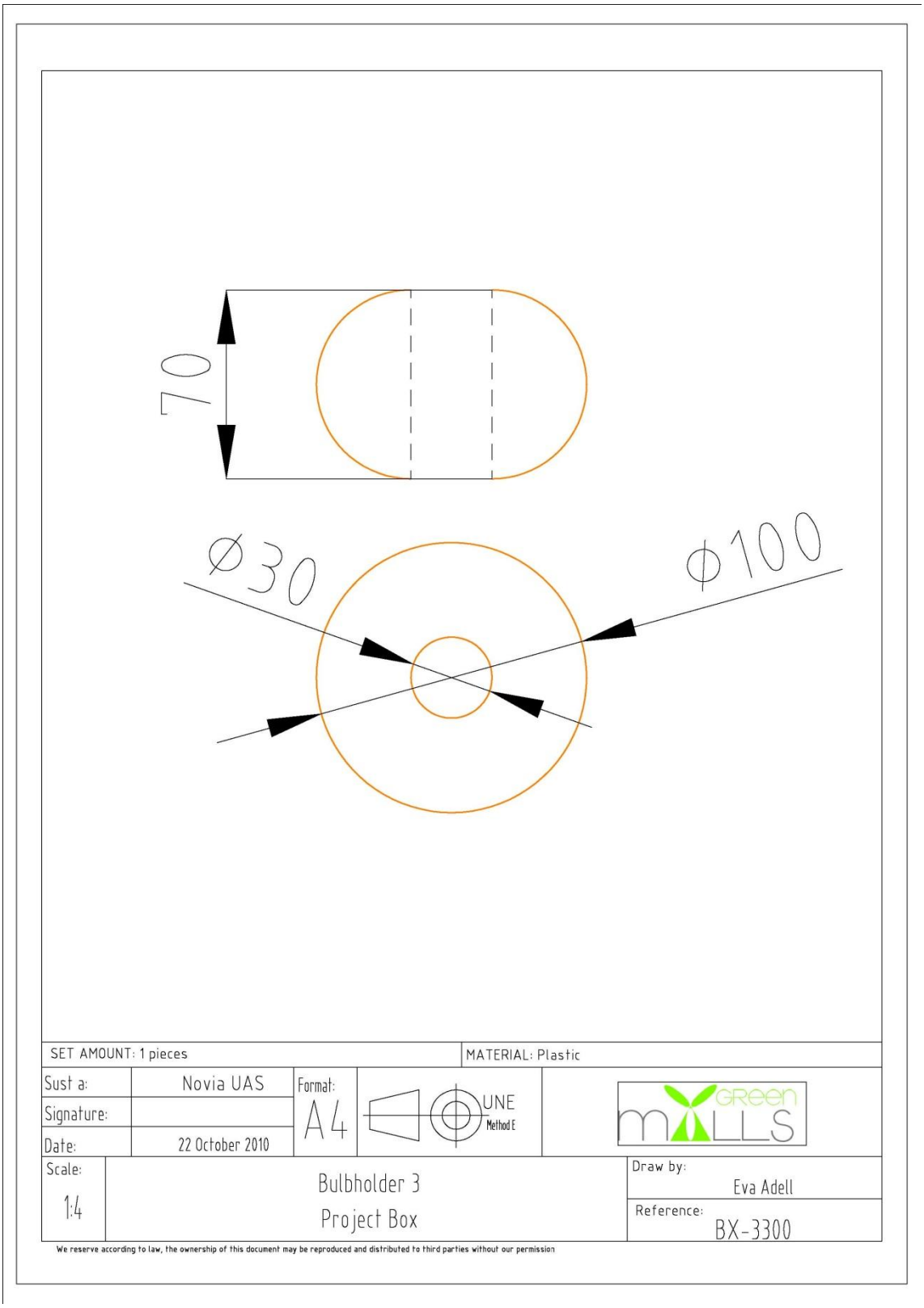

12.8.4.5 BX-3400 Card

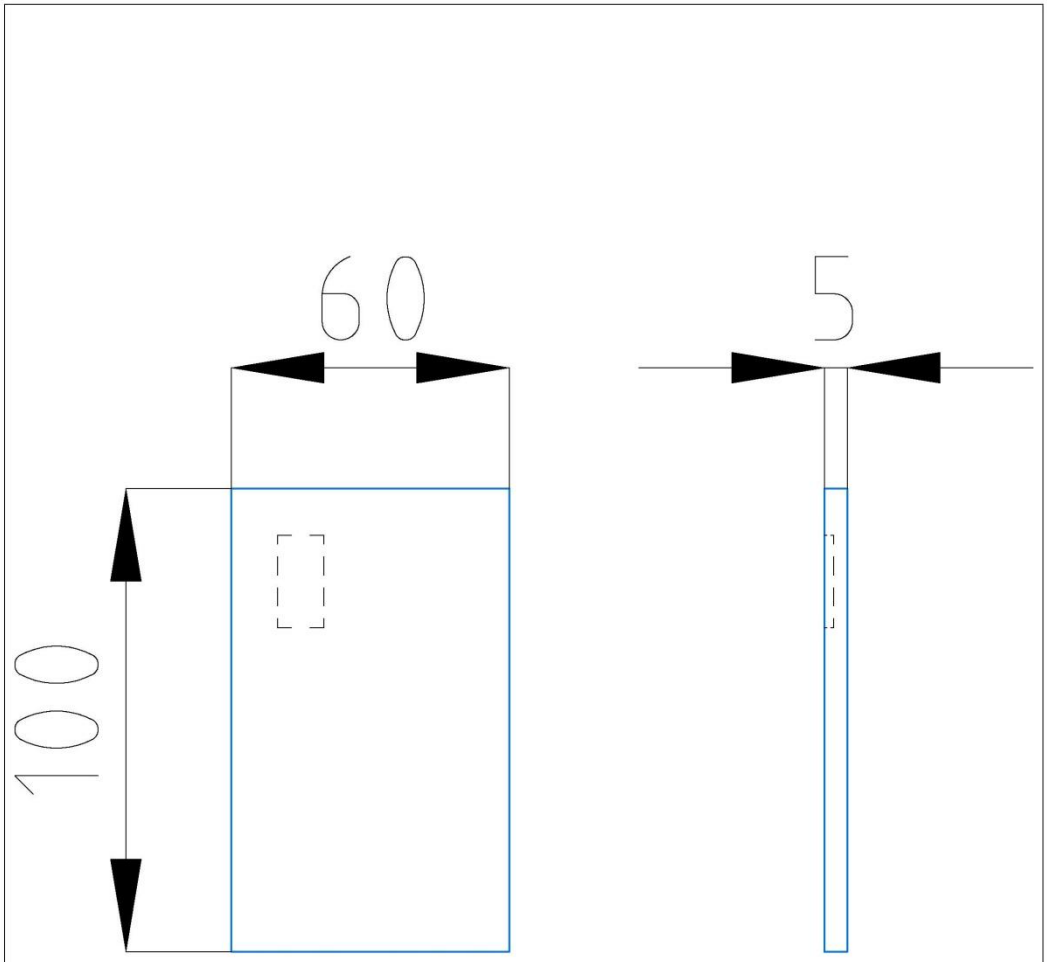

SET AMOUNT: 1 pieces		MATERIAL: Plastic	
Sust a:	Novia UAS	Format: A4	UNE Method E
Signature:			
Date:	22 October 2010		
Scale: 1:4	Card Project Box	Draw by: Eva Adell	
		Reference: BX-3400	

12.8.4.6 BX-3500 Save energy circuits

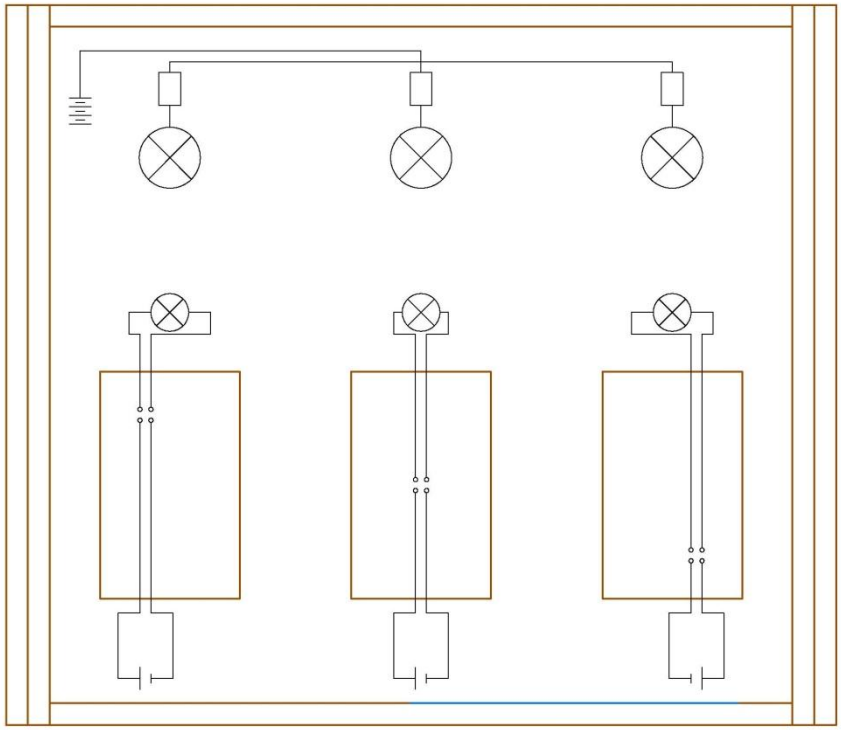

SET AMOUNT: 1 pieces			MATERIAL: -	
Sust a:	Novia UAS	Format: A4	UNE Method E	Green MILLS
Signature:				
Date:	22 October 2010			
Scale: 1:4	Save energy circuit Project Box		Draw by: Eva Adell	
			Reference: BX-3500	

12.8.5 Energy game

12.8.5.1 BX-4000 Card

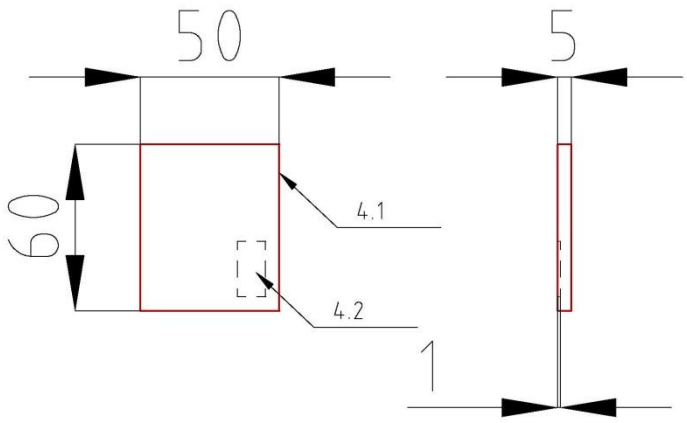

8.2	Copper square	20	BX-0802	Copper	-
8.1	Card	20	BX-0801	Plastic	-

SET AMOUNT: 20 piece | MATERIAL: Plastic

Place:	Novia UAS	Format A4	UNE Method E
Signature:			
Date:	5 December 2010		

Scale: 1:1	Card Project Box	Draw by: Eva Adell Reference: BX-0400

12.8.5.2 BX-4100 Central module

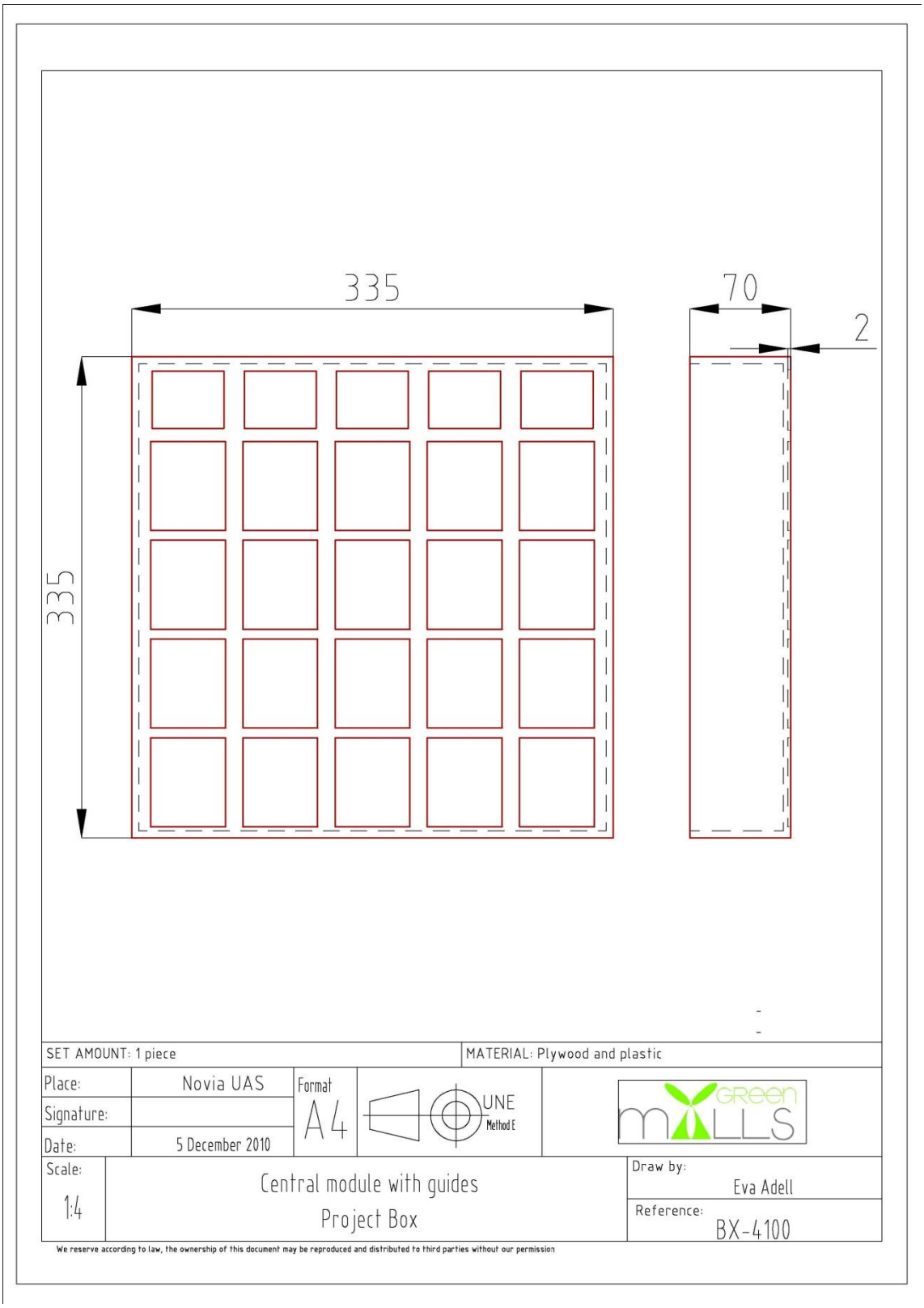

12.8.5.3 BX-4200 Central module with circuits

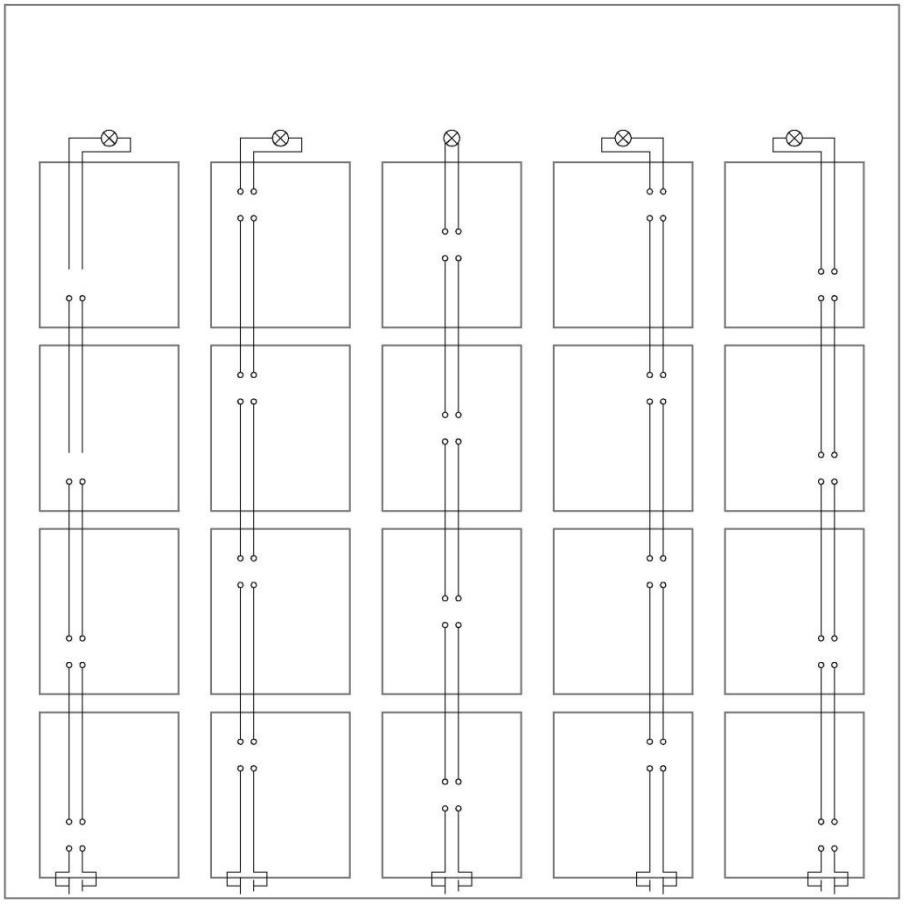

SET AMOUNT: 1 piece			MATERIAL: Plywood	
Place:	Novia UAS	Format A4	UNE Method E	GREEN MILLS
Signature:				
Date:	22 October 2010			
Scale: 1:4	Central module circuits Project Box		Draw by: Eva Adell Reference: BX-4200	

12.8.6 Information

12.8.6.1 Wind energy English

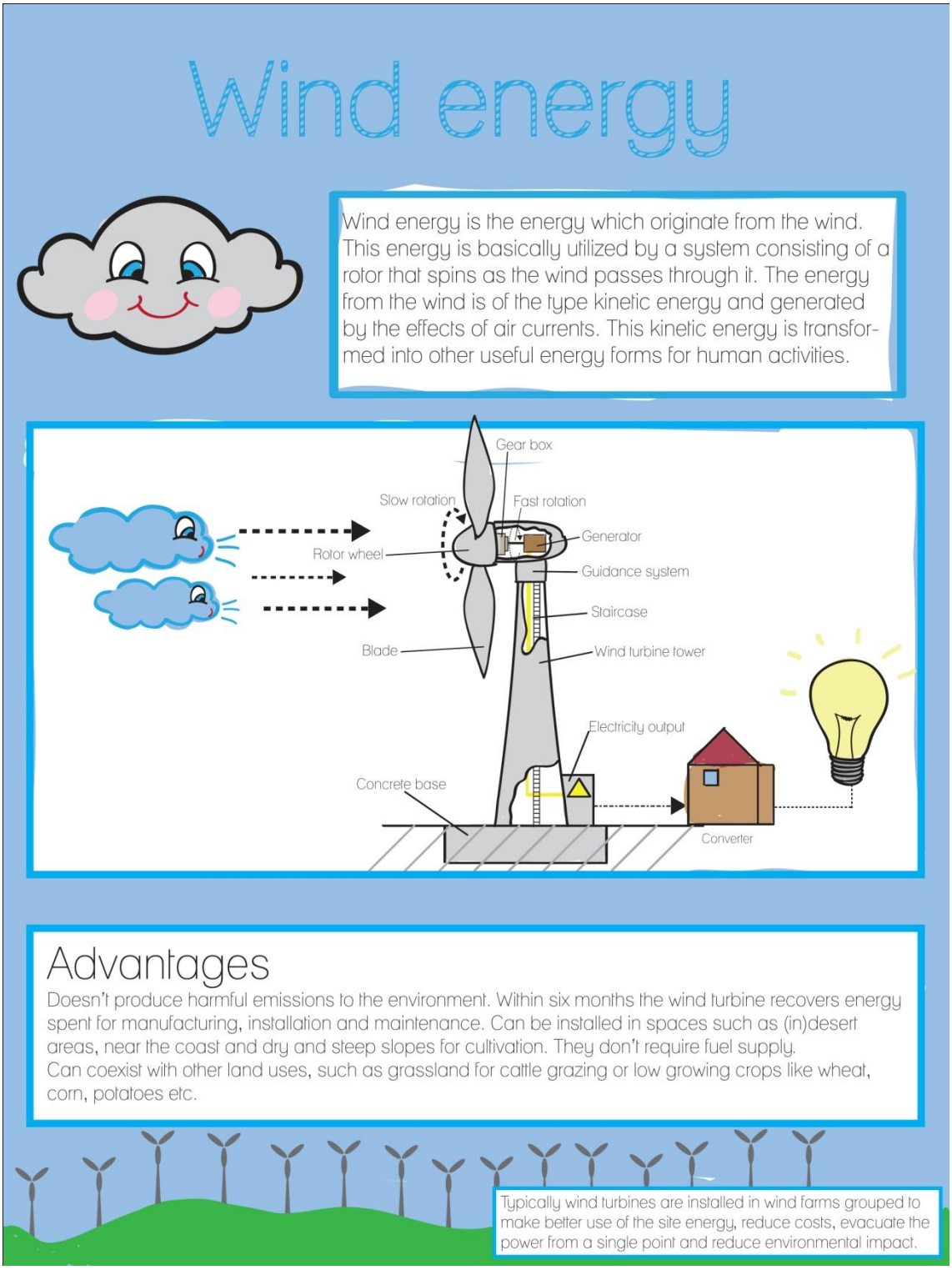

12.8.6.2 Wind energy Swedish

Vindkraft

Vindkraft är den energiform som härstammar från vinden. Denna energi utvinns främst via ett system bestående av en rotor som roterar när vinden passerar via den. Energin som fås från vinden är av typen kinetisk energi (rörelseenergi) och uppstår p.g.a. vindströmmar. Den kinetiska energin omvandlas till andra typer av energiformer, användbara för människan.

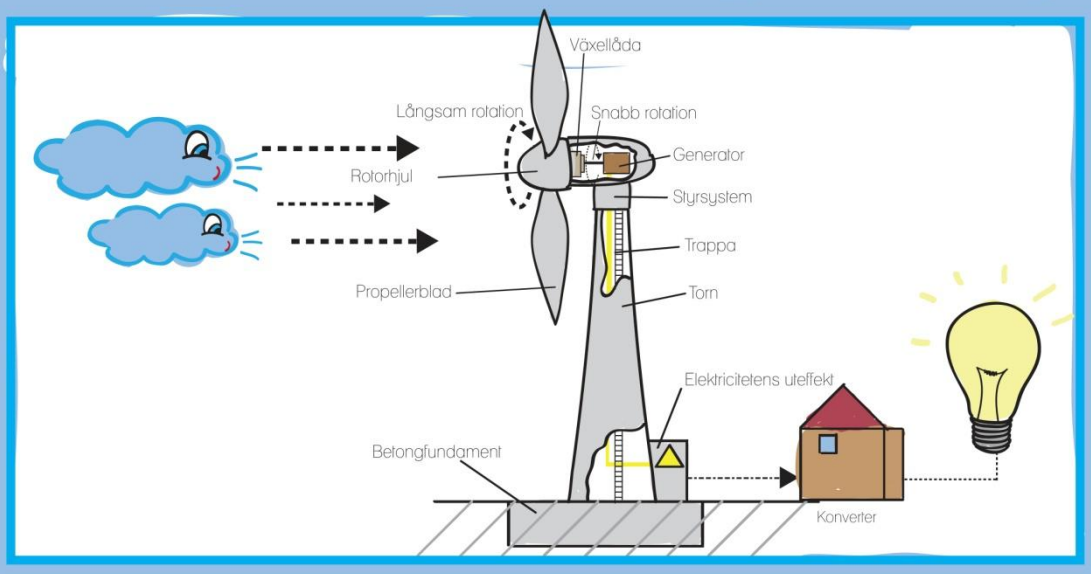

Fördelar

Producerar inte utsläpp som är skadliga för miljön. Inom sex månader har vindturbinen producerat lika mycket energi som man spenderat för tillverkning, installering och underhåll. Kan installeras i områden så som öken, kustområden samt torra och branta sluttningar. Kräver inget bränsle. Kan leva sida vid sida med andra användningstyper för marken, så som betmarker för boskap och lågt växande grödor som vete, korn och potatis.

Vanligtvis är vind turbinerna installerade i vindkraftsparker, grupperade för att på bästa sätt utnyttja områdets energi, minska kostnaderna, utvinna all kraft från en enda plats och minska på miljöpåverkningen.

12.8.6.3 Wind energy Finnish

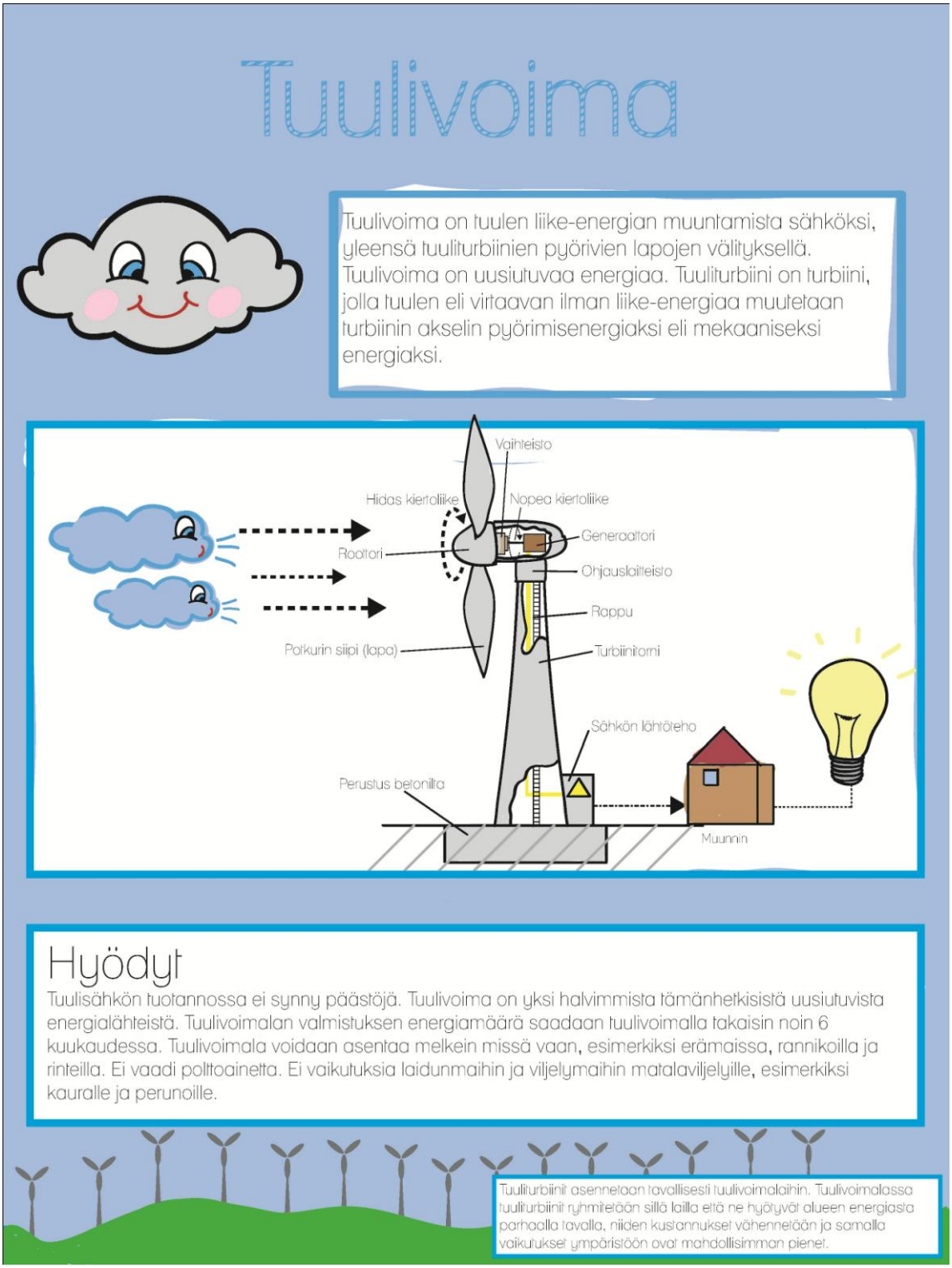

12.8.6.4 Save energy English

Save energy

Types of bulbs

Incandescent bulbs

They are the most common, they emit a warm yellowish light slightly.

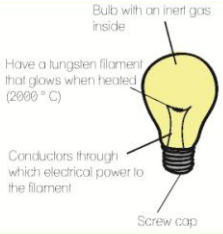

Halogen Bulbs

They are incandescent lamps but with tungsten filament that is heated to higher temperatures. often used as ambient light. emit focused light.

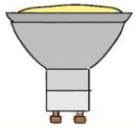

Led lamps

They are the newest energy saving lamps.
The power is immediate. Unaffected by vibration or shock, and being composed of several light bulbs, if one is missing, the other ensures the lighting without emitting only heat.

Compact fluorescent bulb

They emit a bright white light. consume much energy to be switched on/off. High durability and low consumption. With only 11 watts illuminate the same as a 60 watt incandescent.

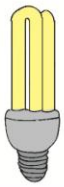

Efficience comparisons

	Potency	Durability(hours)	Price	Waste
Incandescent bulb	60 W	1,000	+2 eur	Depends on environmental conditions and cycles on / off
Halogen bulb	70 W	3,000	+3 eur	Special care must be taken to high temperatures
Led lamp	9 W	100,000	+45 eur	70% yield from 50,000 hours
Compact fluorescent bulb	20 W	7,500	+10 eur	Waste 75% less than incandescent bulb

How to save energy at home

Turn off lights when you are not using them

Your computer, TV, VCR, CD or DVD player, and other small appliances use electrical energy, so be sure to turn them off when you are finished using them

Shorten Your Showers

Don't have the fridge door open too long time

Use Your Windows: open curtains when the sun shines through to heat your home for free.

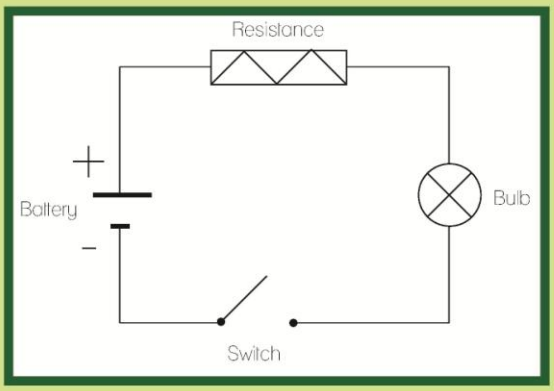

Basic circuit

12.8.6.5 Save energy Swedish

Spara energi

Lamptyper

Glödlampor

Den vanligaste typen i dagsläget. De avger ett varmt gulaktigt sken.

Halogen lampa

En glödlampa vars volframtråd hettas upp till ännu högre temperaturer. Används ofta som stämningsgivande ljuskälla. Avger ett koncentrerat ljus.

Ledlampor

Är de nyaste bland energisparande lampor. Energin är omedelbar. Ledlampor påverkas inte av vibrationer eller stötar. En ledlampa utgörs av flera små leds, och om en av dessa är ur funktion påverkar den inte de andra; lampan lyser ändå. Ingen överskottsvärme avges.

Kompakt lysrörslampa

Avger ett starkt vitt ljus. Kräver mycket energi för att tändas/släckas. Hög hållbarhet och låg energikonsumtion under användning. En 11 watt lysrörslampa lyser upp lika starkt som en 60 watt glödlampa.

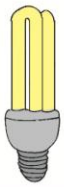

Effektjämförelse

	Potential	Hållbarhet (timmar)	Pris	Spillenergi
Glödlampa	60 W	1,000	+2 eur	Beror av omgivningen och antal tändningar/släckningar
Halogenlampa	70 W	3,000	+3 eur	Särskild uppmärksamhet vid höga temperaturer
Ledlampa	9 W	100,000	+45 eur	70% ljusstyrka efter 50 000 timmar
Kompakt lysrörslampa	20 W	7,500	+10 eur	75% mindre spillenergi jämfört med en glödlampa

Hur du kan spara energi hemma

Stäng av lampor när du inte använder dem.

Din dator, TV, video, CD- och DVD-spelare tillsammans med andra små apparater använder elektrisk energi också i standby, så var säker på att stänga av dem helt när du använt dem.

Ta kortare duschar.

Låt inte kylskåpsdörren stå öppen i onödan.

Använd fönstren: låt solen skina in och värma upp rummet gratis.

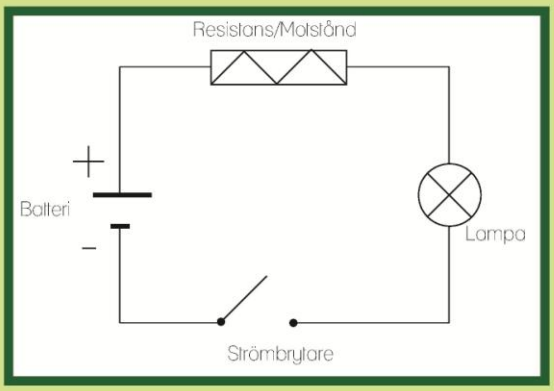

Grundläggande strömkrets

12.8.6.6 Save energy Finnish

Säästä energia

Erityyppiset lamput

Hehkulamppu

Tavallisista hehkulampuista saadaan kellertävää valoa.

Halogeenilamppu

Kuumasta hehkulangasta haihtunut volframi reagoi kaasuuntuneen halogeenin kanssa ja kiinnittyy takaisin langan kuumimpiin osiin. Tämä mahdollistaa hehkulangan lämpötilan nostamisen korkeammaksi kuin tavallisella hehkulampulla. Käytetään usein tunnelmavalona.

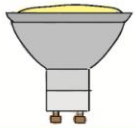

LED/Loisteediodi

Ledit ovat valonlähteinä hehkulamppuun verrattuna erittäin pienikokoisia ja mekaanisesti kestäviä: niissä ei ole helposti rikki menevää lasikuorta eikä hehkulankaa. Ledien suhteellisen hyvä suuntaavuus tekee niistä myös sisustuksellisesti houkuttelevia valonlähteitä.

Loistelamppu

Elektronisten liitäntälaitteiden etuina magneettisiin kuristimiin verrattuna ovat korkea hyötysuhde, parempi loisteputken valotehokkuus, värinätön valo, sinimuotoinen attovirta, vilkkumaton syttyminen ja lamppujen pidempi elinikä.

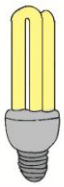

Tehovertaus

	Potentiaali	Kestävyys (tunteja)	Hinta	Jäte
Hehkulamppu	60 W	1,000	+2 eur	Riippuu ympäristöstä sekä sytyttämisien ja sammuttamisien kertojen määrästä.
Halogeenilamppu	70 W	3,000	+3 eur	Erityishuomio korkeissa lämpötiloissa
LED tai Loisteediodi	9 W	100,000	+45 eur	70 % tuotto 50 000 tunnin jälkeen
Loistelamppu	20 W	7,500	+10 eur	75 % vähemmän jäte hehkulamppua verrattuna

Miten voit säästää energia

Älä jätä valot päälle kun et ole huoneessa.

Tietokoneesi, TV, video, CD- ja DVD-soitin sekä muut pienet laitteet käyttävät sähköä ja energia myös standby:ssa.

Ota lyhyemmät suihkut.

Älä jätä jääkaapin ovi auki turhaan.

Ota ikkunoista hyödyksi: anna aurinko paistaa huoneeseen, sen valo antaa myös lämpöä.

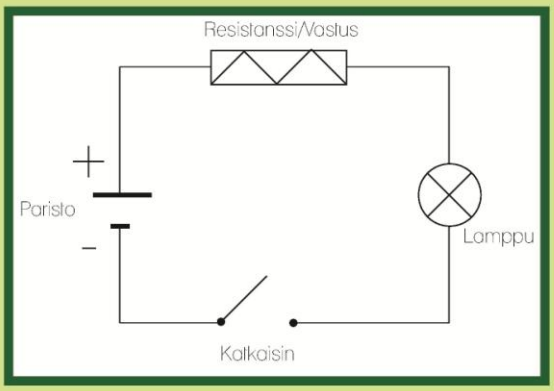

Perustava virtapiiri

12.8.6.7 Solar and heating energy English

Solar and geothermal energy

Solar energy is energy obtained by capturing the light and heat emitted by the Sun.

Uses:

- Energy for small appliances
- Domestic heating
- Water heating
- Lighting

Geothermal energy is energy that can be obtained by utilizing the heat inside the Earth.

Uses:

- Electricity generation
- Use direct heat
- Heating and plumbing
- Absorption cooling

How it works

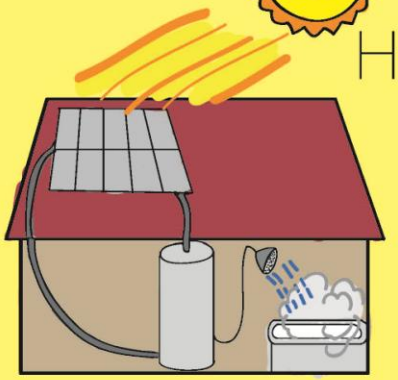

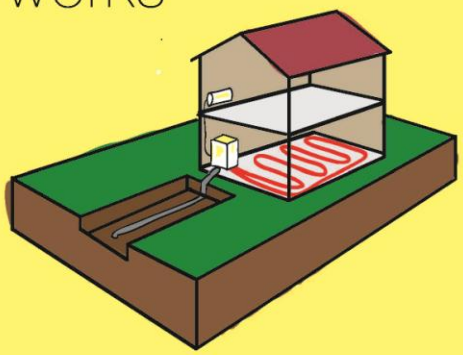

Advantages

-It is a clean and inexhaustible resource: It does not pollute and our raw material is the Sun, this is why it is a renewable, clean and environmentally friendly energy.

-No environmental impact: No waste, debris, smoke, noise, odor, etc.

-One solution to the energy problem: It has become one of the necessary solutions to the energy problem of our planet.

-The waste produced is minimal.

-System wide savings, both economic and energy

-No outside noise generated

-Geothermal resources are greater than the resources of coal, oil, natural gas and uranium.

-The area of land required for geothermal power plants is lower than others plants. It does not require logging or construction of fuel storage tanks.

12.8.6.8 Solar and heating energy Swedish

Sol-och geotermisk energi

Solenergi är den energi som fås genom att fånga in ljuset och värmen som strålar ut från solen.

Användning:

- Energi till mindre apparater
- Uppvärming av hushållet
- Uppvärmning av vatten
- Belysning

Geotermisk energi är energi som tas tillvara från Jordens inre.

Uppvärming och rörsystem:

- Generera elektricitet
- Använda som direkt uppvärmning
- Uppvärming och rörsystem
- Värmeväxling

Hur det fungerar

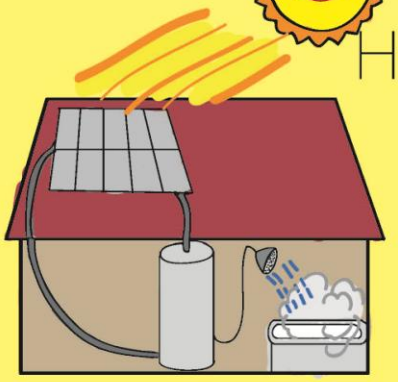

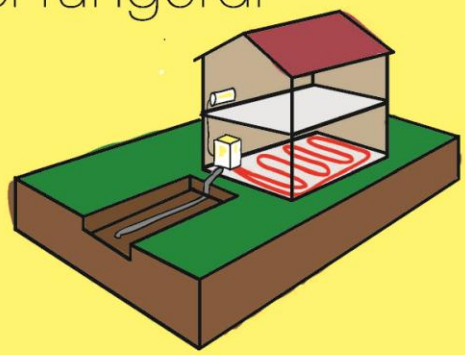

Fördelar

-Det är en ren och oändlig resurs: Inga föroreningar och eftersom råmaterialet är solen är energin förnybar, ren och miljövänlig.
-Ingen inverkan på miljön: Ingen energi som går till spillo, inget avfall, ingen rök, inget ljud, ingen lukt osv.
-En möjlig lösning till dagens energiproblem: Solenergi har blivit en nödvändig lösning till problemet med brist på energi.

-Minimal spillproduktion.
-Besparingar över hela systemet, både ekonomiskt och energimässigt.
Inget Inga störande ljud uppstår ljud uppstår.
-Geotermiska resurser är större än motsvarande för kol, olja, naturgas och uranium (används i kärnkraftverk).
-Arealen av land som krävs för ett geotermiskt kraftverk är mindre än för andra kraftverk. Kräver inte skogshuggning eller tillverkning av bränsletankar.

12.8.6.9 Solar and heating energy Finnish

Aurinko-ja maansisäinen energia

Aurinkoenergia saadaan auringon valosta ja lämmöstä. Aurinkoenergia on siis auringon säteilyn hyödyntämistä energiantuotantoon.

Käyttö:

- Energia pieneihin laiteihin
- Kotitalouden lämmittelyyn
- Veden lämmittämiseen
- Valaistukseen

Maalämpöenergia, tai geoterminen energia, on maankuoreen johtuvaa energiaa, joka syntyy maan sisuksissa tapahtuvien radioaktiivisten hajoamisten seurauksena.

Käyttö:

- Sähkön tuotantoon
- Lämmittämiseen
- Lämmönvaihtoon

Kuinka se toimii

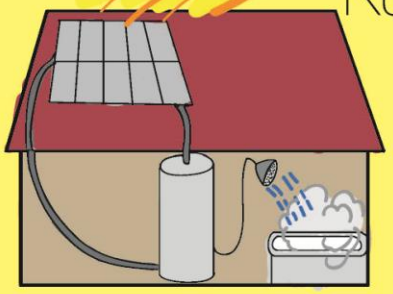

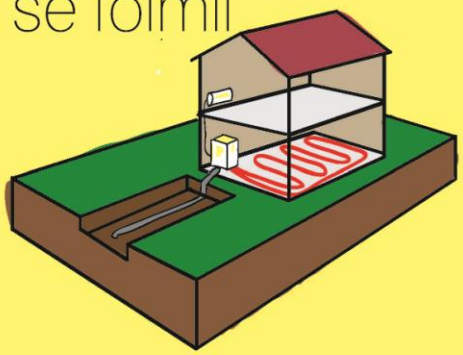

Hyödyt

-Aurinkoenergia on uusiutuvaa energiaa, ja sen tuotannosta syntyy päästöjä ja jätettä vain laitteiden valmistuksessa ja kierrätyksessä.
-Ei vaikuta luontoon, eli ei mitään: jätettä, päästöjä, savua, hälyä, hajua jne.
-Aurinkoenergia on tullut olemaan välttämätön ratkaisu energiapuutteeseen.

-Geoterminen energia on lähes saasteetonta.
-Sekä taloudelliset että energiataloudelliset säästöt.
-Ei aiheuta sivullista hälyä.
T-ämä energian muoto on käytännössä rajaton. Geotermisen energian voimavarat ovat isommat kuin hiilen-, öljyn-, maakaasun-, ja uraanin voimavarat.
-Vaaditu pinta-ala geotermiselle voimalaitokselle on pienempi kuin muille voimalaitoksille.

12.8.6.10 BX-5000 Methacrylate

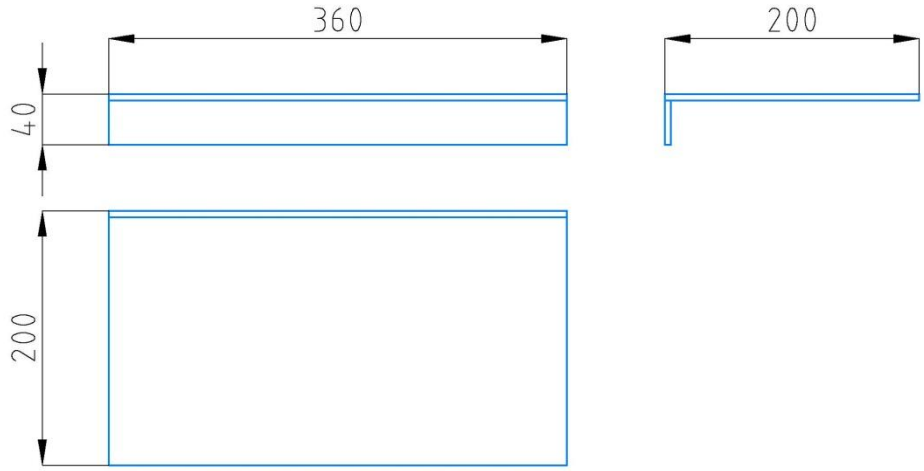

SET AMOUNT: 1 pieces			MATERIAL: Methacrylate	
Place:	Novia UAS	Format: A4	UNE Method E	Green MILLS
Signature:				
Date:	26 November 2010			
Scale: 1:8	Methacrylate Project Box		Draw by: Eva Adell	
			Reference: BX-5000	

12.8.6.11 BX-5001 Methacrylate 1

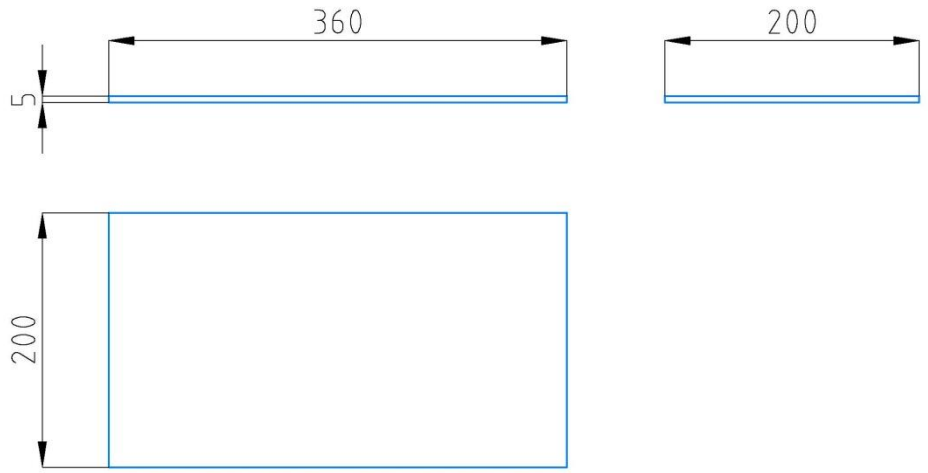

SET AMOUNT: 1 pieces			MATERIAL: Methacrylate	
Place:	Novia UAS	Format: A4	UNE Method E	Green MILLS
Signature:				
Date:	26 November 2010			
Scale: 1:8	Methacrylate_Part 1 Project Box		Draw by: Eva Adell	
			Reference: BX-5001	

12.8.6.12 BX-5002 Methacrylate 2

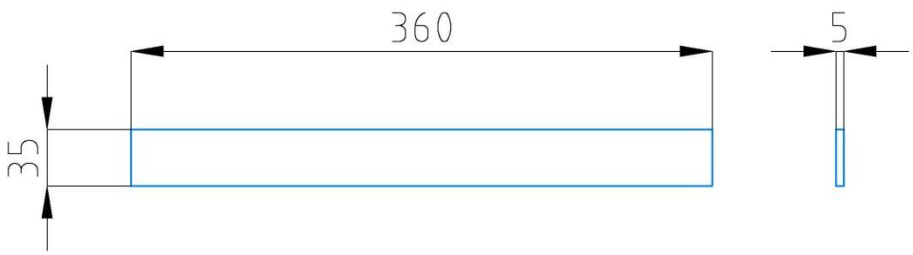

SET AMOUNT: 1 pieces				MATERIAL: Methacrylate
Place:	Novia UAS	Format: A4	UNE Method E	Green MILLS
Signature:				
Date:	26 November 2010			
Scale: 1:8	Methacrylate_Part 2 Project Box			Draw by: Eva Adell
				Reference: BX-5002

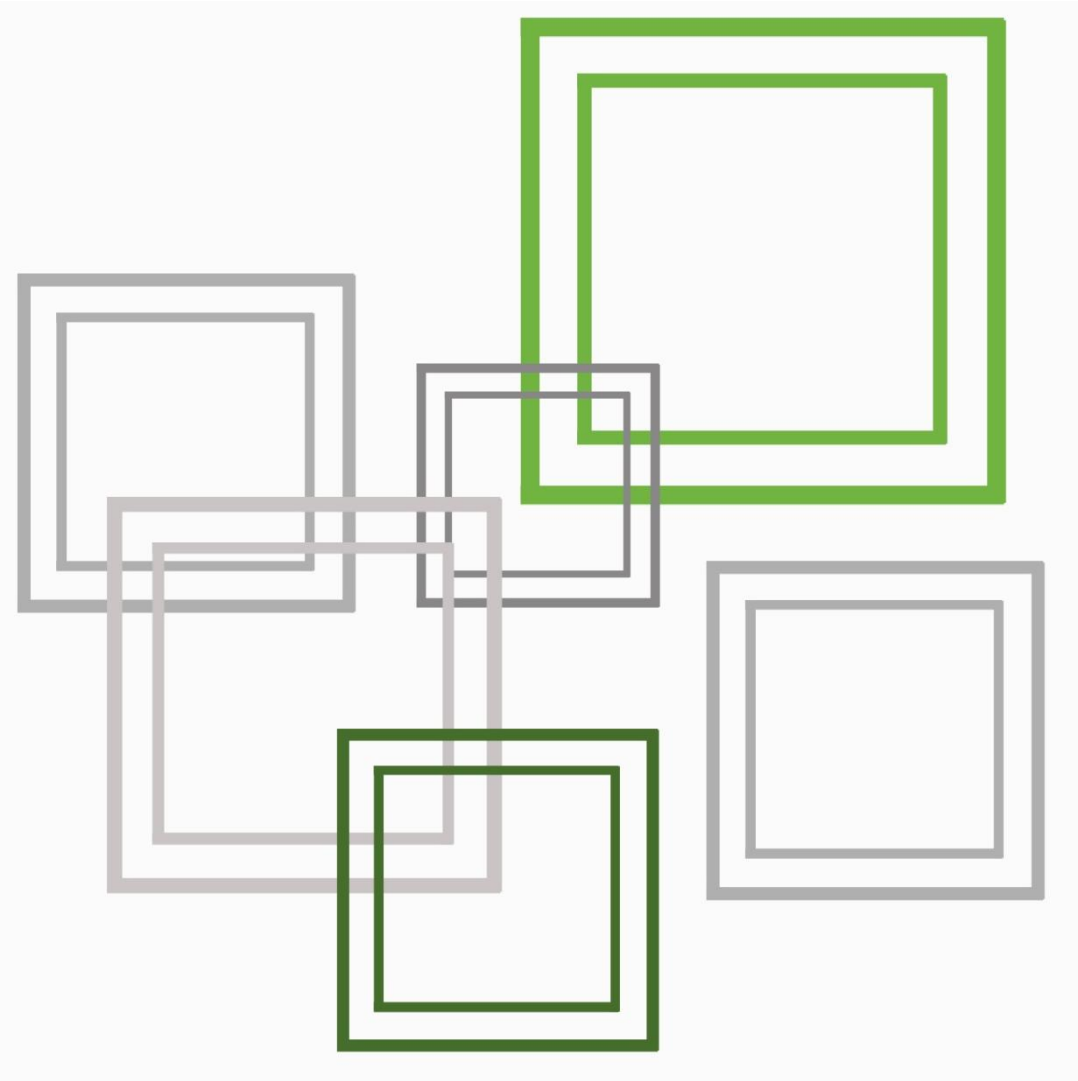

EPS Autumn 2010

Green Mills