Christof Deckmyn

DEVELOPING AND TESTING POWER CONTROL FOR A WIND POWER STATION MODEL

Unit Technology and Communication
2011

VAASAN AMMATTIKORKEAKOULU
UNIVERSITY OF APPLIED SCIENCES
Master in Renewable Energy

ABSTRACT

Author	Christof Deckmyn
Title	Developing and Testing Power Control for a Wind Power Station Model
Year	2011
Language	English
Pages	78
Name of Supervisor	Juha Nieminen

This thesis investigates a power algorithm for small wind turbines without pitch control. This research suggests the possibility to produce the maximum power at every wind speed using an electrical braking torque.

The set up of the research took place in a laboratory without real wind. Therefore, a hardware model of wind turbine, instead of a real wind turbine was required. A motor, controlled by a frequency converter and mechanically coupled to the shaft of the generator simulated the wind. A second frequency converter connected to the generator generated a braking torque. A third frequency converter delivered power to the grid. Using a PLC we a wind pattern could be integrated in order to simulate a real wind model with the motor.

A power algorithm shows how we can respond to the tip speed of the blades with the braking torque in order to keep the maximum power coefficient.

Keywords Wind, turbines, power, regenerative, coefficient, efficiency.

CONTENTS

LISTS OF FIGURES

LIST OF TABLES

LIST OF APPENDICES

FOREWORD

This Master's thesis is written during my Erasmus period in Finland from February 2011 until May 2011, under supervising Senior Lecturer Juha Nieminen, Vaasa University of Applied Sciences.

As a part of my Master's degree in Renewable Energy I made a thesis about wind energy. The purpose of this thesis is to develop a power algorithm for small wind turbines without pitch control. This research demonstrates the possibility to produce the maximum power at every wind speed using an electrical braking torque.

This thesis was done in the Technobothnia laboratory of Vaasan ammattikorkeakoulu, University of Applied Sciences.

I would like to thank my supervisor Juha Nieminen for giving me always a good advice and support during the development of this thesis. He gave me the opportunity to find the perfect balance between work and a comfortable stay during my Erasmus period. I also would like to thank my promoter from Belgium, Mr Joan Peuteman for giving me the chance to study and doing this thesis abroad.

Finally I would like to thank my parents and my girlfriend for supporting me in this exchange adventure.

1 INTRODUCTION

A wind turbine extracts the energy from the wind and converts it into electrical energy. The aim of a wind turbine is to capture as much as possible energy from the wind. The produced electric power is mainly dependent on the wind speed but also on the power coefficient. This is a factor which, we as engineers can anticipate to get the maximum energy out of the wind. The coefficient is determined by the ratio between the tip speed of the blades and the wind speed, called tip-speed ratio.

At every wind speed, we have a different power production. If the wind speed drops, we must try to keep the tip speed ratio constant to guarantee the maximum energy production.

This thesis investigates the possibility to keep the tip speed ratio as constant by generating an electric braking torque with the generator. In this way we can respond to the tip speed of the blades and keep the power coefficient at its maximum. Because this research is done in a laboratory, we need a hardware model of a wind turbine. This model simulates a real wind turbine. A motor, controlled by a frequency converter and mechanically coupled to the shaft of the generator will simulate the wind. A second frequency converter connected to the generator will generate a braking torque. The last frequency converter is able to deliver power to the grid.

Using a PLC we can integrate a wind pattern in order to simulate a real wind with the motor. This wind pattern is based on data from the manufacturer. Two computers with the NC drive application are connected to the frequency converters. That makes it possible to set the parameters of motor and generator.

Once everything is set, we can integrate the different control principles. Preliminary research showed us that we can use a speed control or torque control. Both principles were implemented, compared and considered.

2 THEORETICAL BACKGROUND

2.1 Wind Energy

Today the living standard could not be maintained without energy. Unfortunately, our energy-related services include a wide variety of environmental effects. In the 21st century we cannot longer tolerate these effects. That is the reason why the energy problem continues to be a major topic in energy engineering, as well as in the energy and environmental policies all over the world. The worldwide controversy about the potential risks of the greenhouse effect is one of the many examples. The increasing knowledge and recognition of the effects associated with energy utilization will increase complexity. Companies all over the world are helping to design and implement renewable energy solutions for their unique energy needs.

Today, one of the fastest growing sources of electricity in the world is wind energy. Resulting from the technological advancements and economic drivers, wind energy is now able to contribute to our growing energy needs. The reason why we have to invest in wind power is because this is a renewable energy source. For generating electricity using wind turbines we do not have to emit harmful gasses. Since the wind it will always blow, wind energy is inexhaustible and sustainable. Actually, the development of wind energy is just at the beginning. That is why many governments put money into developing renewable energy. In the future they expect wind energy will be cost competitive.

2.2 Wind Turbine Technology

Around the world, there are wind turbines of all sizes, ranging from residential machines (several kW) to larges machines (MW). In this thesis we are using a 2kW generator. Therefore, we focus on the (almost) similar technology of small turbines.

Wind energy is the electrical energy that a wind turbine can make. The wind impact on the blades of a turbine will rotate the rotor, which drives a generator that produces electricity. The generated electricity can be used directly and the surplus can be delivered to the grid.

2.3 Small Wind Turbines

Small wind turbines have capacity ratings from 1 to 100 kilowatts (kW) and they can produce power, for example, for a residential home. They have a maximum hub height of 15 meters, measured from the base of the wind turbine. A small wind turbine is mainly used to reduce energy consumption and they usually have a good performance.

2.4 Different Types

An important distinction between different types of wind turbines is the distinction between turbines with blades and other turbines. For the blade turbines it is about the "traditional" wind turbines with a rotor with usually two or three propellers. The blade turbines have a horizontal axis and the abbreviation HAWT is used to refer to them. The small blade turbines (Figure 3) are similar in the shape to the large, modern wind turbines.

In recent years, in addition to the various new types of blade turbines, several new types of small vertical axis wind turbines (VAWT) are developed. We can subdivide small vertical axis wind turbines into two types:

- with an open rotor: the Darrieus type (Figure 1),
- with a solid rotor means the Savonius type* (Figure 1), invented by the Finnish engineer S. J. Savonius in 1922.

Both types work quite well in an environment with turbulence. This makes the Darrieus and Savonius turbines suitable for use in the built environment. Generally the turbines of the Darrieus type have a better performance than the Savonius

type. A disadvantage of the Darrieus type is the laborious startup. The open structure of the Darrieus type causes more nuisance than the Savonius type (noise, shadow, bird strikes), but less than small blade turbines.

		
Darrieus type turbine	Savonius type turbine	Small HAWT

Figure 1. Different types of wind turbines.

(Peuteman, Lecture Material 1, 2007) (Masters, 2004)

2.5 Grid Connected Wind Power Station

A small wind turbine converts wind energy into ‘green energy’. Because the frequency of the current varies with the wind, there is a controller/inverter that converts the power into usable AC current (AC is the current that you purchase through the sockets for the household appliances). The AC current is connected to the electricity meter at your home.

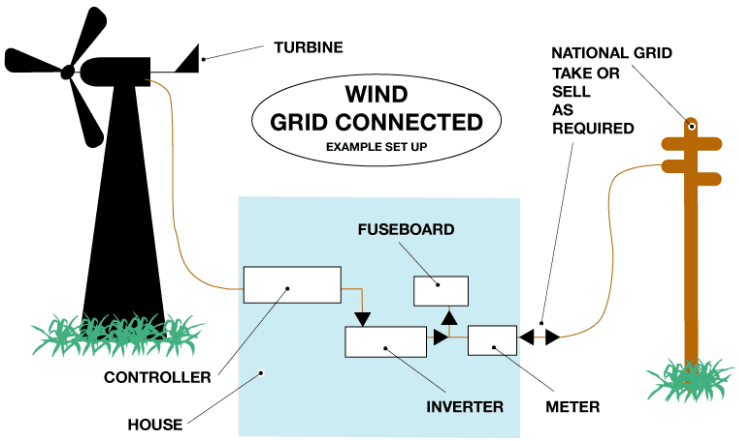

Figure 2. Grid connected wind power Station.

The yield of a small wind turbine depends on:

- wind speed,
- time the wind turbine can run,
- output of the wind turbine (nominal power),
- the efficiency of converting wind energy into electricity by the wind turbine.

2.6 Advantages of Small Wind Turbines

The advantages of small wind turbines are:

- 100% ecological energy without CO_2 emission,
- inexhaustible source of energy,
- sustainable system with safe and secure functioning, less maintenance and long lifespan,
- acceptable payback with green certificates,
- less dependent on your energy supplier and its price.

3 WIND ENERGY - IN THEORY

3.1 Power Available in the Wind

The energy available in the wind is the kinetic energy of large amounts of air moving over the earth's area. This kinetic energy will be captured by the blades of the wind turbine, which is then transformed to mechanical and electrical forms.

The kinetic energy of moving air with mass m en velocity v is give by:

$$E_{kin} = 0{,}5 \,.\, m \,.\, v^2 \qquad (1)$$

The kinetic energy is proportional to the square of the wind speed. Consider an area A. The mass per time unit of the air through this area is proportional to A, to the wind speed v and the density ρ of the airflow.

$$m/t \;=\; \rho \,.\, A \,.\, v \qquad (2)$$

So, the power will be

$$\mathrm{P} = E_{kin}/\mathrm{t} = O,5 \,.\, \rho \,.\, A \,.\, v^3 \qquad (3)$$

The energy, which can be captured from the wind, is proportional to the cube of the wind speed v.

- Variations in wind speed, causes large variations in the production of power.
- The higher you go (e.g. in the mountains), the thinner the air and the lower ρ. This results in a lower energy yield.
- The higher the temperatures, the lower ρ and the lower energy yield.

A very important factor that we can change is the area A. For example: The E66 Enercon turbine has a rotor diameter of 66m, which corresponds with an area of 3400m ² (= 33² . π). Unfortunately, not the entire amount of kinetic energy can be

transformed into kinetic energy needed for rotating the blades, which are connected to the rotor. In front of the wind turbine, the wind has a velocity v (= upwind). Behind the wind turbine, the wind has lost a part of its kinetic energy and the speed has decreased to v_d (downwind). This is shown in Figure 3.

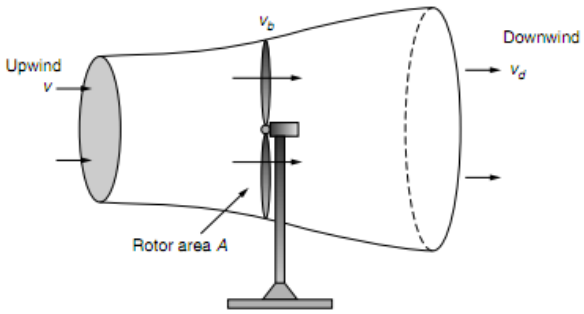

Figure 3. Wind speed before and behind the blade area.

(Peuteman, Lecture Material 2, 2007) (Masters, 2004)

3.2 Betz Law

The Rakine-Froude theorem shows that the wind speed near the turbine is

$$v_b = 0{,}5\ (v + v_d) \tag{4}$$

The mass of the airflow per time unit is

$$m_b/t = \rho . A . v_b \tag{5}$$

Where v_b, is the wind speed near the blades.

The amount of energy which is removed from the air:

$$E = 0{,}5\ . m_b . (v^2 - {v_d}^2) \tag{6}$$

The amount of power generated by the wind:

$$P_b = 0{,}5\ . \rho . A . v_b . (v^2 - {v_d}^2) \tag{7}$$

$$P_b = 0{,}25 \,.\, \rho . A . (v + v_d) . (v^2 - {v_d}^2) \tag{8}$$

Now we can rewrite this and separate the upwind v to determine the rotor efficiency:

$$P_b = C_p . 0{,}5 \,.\, \rho . A . v^3 \tag{9}$$

Where,

$$C_p = 0{,}5 \left(1 + \frac{v_d}{v}\right) . (1 - \left(\frac{v_d}{v}\right)^2) \tag{10}$$

To find the maximum possible rotor efficiency, we take the derivative of the rotor efficiency compared to $\frac{v_d}{v}$ and set it equal to zero:

$$\frac{dC_p}{d\frac{v_d}{v}} = 0{,}5 . [\left(1 - \left(\frac{v_d}{v}\right)^2\right) + \left(1 - \frac{v_d}{v}\right) . (-2 . \frac{v_d}{v}) \tag{11}$$

$$= 0{,}5 . [\left(1 - \left(\frac{v_d}{v}\right)\right) . \left(1 + \left(\frac{v_d}{v}\right)\right) + \left(1 - \frac{v_d}{v}\right) . (-2 . \frac{v_d}{v}) \tag{12}$$

Which has a solution,

$$\frac{v_d}{v} = \frac{1}{3} \tag{13}$$

In other words, the blade efficiency will be the maximum if it slows the wind speed to one-third of its undisturbed, upstream wind speed. If we now substitute (13) into an equation for rotor efficiency, we will find the maximum blade efficiency:

$$C_{p\,max} = \frac{16}{27} = 59{,}3\% \tag{14}$$

When the original wind speed is reduced to one third, the amount of energy taken from the wind will be the maximum. This is 59.3% and is called the Betz limit. In reality, we cannot reach the Betz limit. Mostly, it goes to the 40% - 45%.

The rotor efficiency C_p depends on the ratio $\frac{v_d}{v}$. Figure 4 shows C_p in function of $\frac{v_d}{v}$.

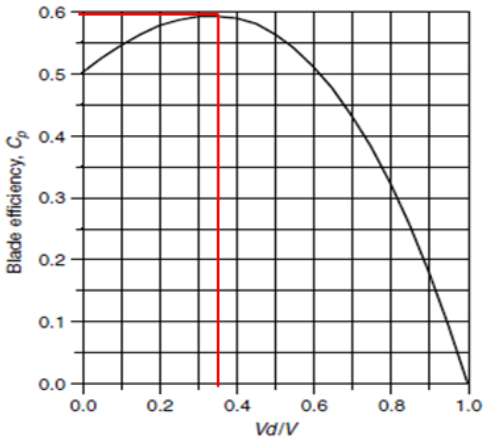

Figure 4. Blade efficiency as a function of the tip speed ratio.

The blade efficiency reaches the maximum when the wind is slowed to one-third of its upstream value.

(Peuteman, Lecture Material 2, 2007) (Masters, 2004)

3.3 Power Curve

The power curve (Figure 5) shows the relationship between the wind speed and generator electrical output. The output is proportional to the cube of the wind speed v. See formula (9).

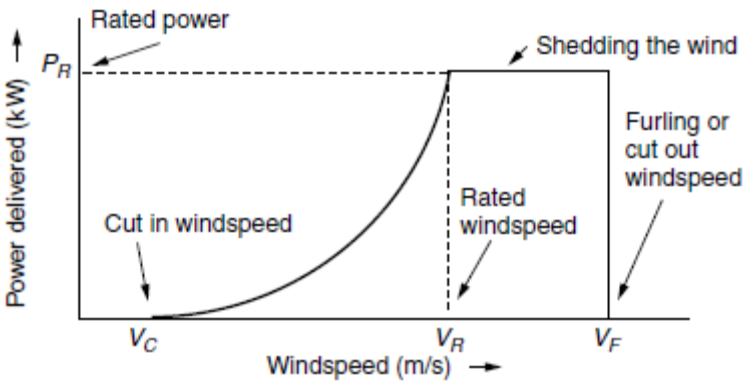

Figure 5. Power curve.

3.3.1 Cut-in Wind Speed

When the wind speed is below the cut-in wind speed, the turbine will not rotate and will not generate power. The cut-in wind speed is quite low (<5m/s), so the power losses for low wind speeds are very low. Cut-in wind speed: 5m/s = light breeze.

3.3.2 Rated Wind Speed

If the wind speed increases above the cut-in wind speed, the power delivered by the generator tends to rise as the cube of wind speed. When the wind speed reaches the rated wind speed v_r, the generator delivers as much power as it is designed for. Above v_r, the wind turbine must we be shut down or else the generator may be damaged. Three approaches are common on large machines: an active pitch-control system, a passive stall-control design, and a combination of the two. Rated wind speed: 15m/s = hard wind.

3.3.3 Shut-down Wind Speed

If the wind speed is too high, the machine must be shut down. The blades are in feathered position (out of the wind). The power delivered by the generator drops to zero. From the viewpoint of the grid operator, ‘power drops’ must be avoided. Shut-down wind speed: 25m/s = storm. (Masters, 2004)

3.4 Hub Height

The choice of the site for a wind turbine depends on the wind speed and the wind characteristics at the hub height. To find out more about the wind speed at certain heights and wind characteristics, we can use a wind atlas. A wind atlas contains data about the wind speed and the direction of the wind in a given area. This data may include maps, but also time series or frequency distributions. Finland has user friendly and up- to-date wind atlas, www.tuuliatlas.fi.

Wind speeds increase at higher altitudes due to surface aerodynamic drag (by land or water surfaces). This is shown in Figure 6. The variation in velocity with altitude, called wind shear, is most dramatic near the surface (see red circle).

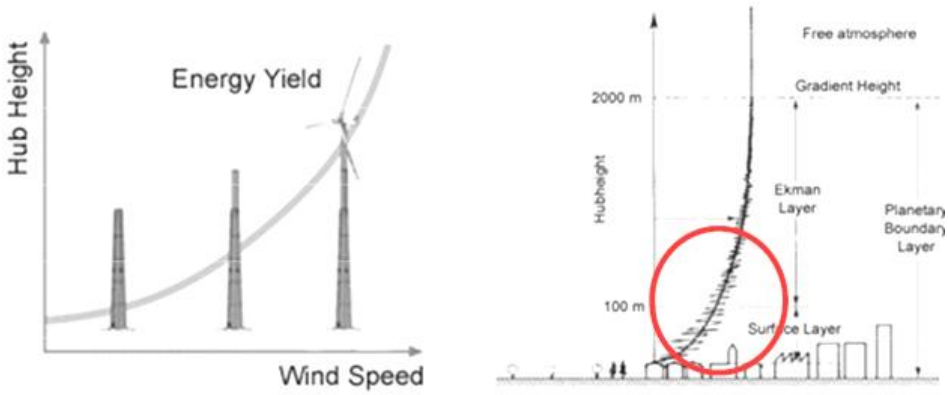

Figure 6. Hub height.

The wind speed is related to the relative wind speed at 10m height.

$$v(h) = v(h_{ref}).\frac{\ln\left(\frac{h}{z_0}\right)}{\ln\left(\frac{h_{ref}}{z_0}\right)} \tag{15}$$

Where,

- h is the hub height,

- h_{ref} is the reference height.

Here we compare the wind speed at a height h with the measured wind speed h_{ref} (reference height). Depending on the site, $z_0$varies between 0,5 (rough landscape) and 0,03 (at sea level). (Peuteman, Lecture Material 1, 2007) (Masters, 2004)

3.5 Up-wind Rotor

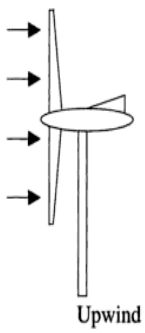

Up-wind turbines have their rotors facing to the wind directly. As the wind stream passes the rotor first, they do not have the problem of the tower shadow. However, a yaw mechanism is essential to keep the rotor always facing the wind. The rotor must be rigid and mounted far enough from the mast (bending blades may not knock against the mast).

Figure 7. Up-wind rotor.

3.6 Down-wind Rotor

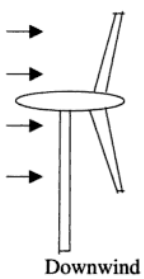

Down-wind turbines are more flexible and do not need a yaw mechanism. On the other hand, the rotor has many problems with the shadow of the tower. The torque becomes smaller, each time a blade passes. Bending blades will not clash with the mast.

Figure 8. Down-wind rotor.

In Figure 9, we can see the windspeed gradient v as a function of the height. The bottom and top of the blades are related to different wind speeds. In reality the wind speed is much less predictable, depending on the location. The direction of the wind depends on the location (and time).

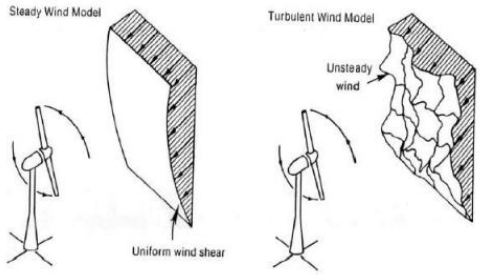

Figure 9. Windspeed gradient in function of the height.

For a three-bladed rotor, the torque curve as a function of rotor position is shown in Figure 10.

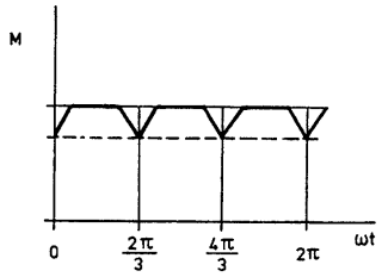

Figure 10. The torque as a function of rotor position.

For a two-bladed rotor, there are two torque drops instead of three (per rotation). The percentage of the drops is larger than the percentage of the torque drops of a three-bladed rotor. (Peuteman, Lecture Material 1, 2007) (Masters, 2004)

3.7 Yaw Control

The purpose of yaw control is to keep the blades facing into the wind. The Darrieus type does not need any kind of yaw control to keep them facing into the wind. A downwind turbine has the advantage that the wind itself controls the yaw system. So it naturally orients itself correctly in related to the wind direction. Upwind turbines require some complex yaw control systems. For larger turbines an active yaw system will be used (see Figure 11).

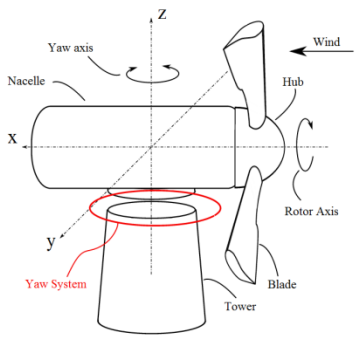

Figure 11. Yaw control.

The active yaw systems are equipped with a torque generating device that rotates the nacelle against the stationary tower, based on signals from wind sensors. The torque-generating equipment works with an electrical yaw motor or sometimes with a hydraulic system. Small wind turbines have a wide variety of techniques to spill wind. A passive yaw control system rotates the nacelle of the turbine to move the blades more and more out of the wind when the wind speeds increases. This can be accomplished by mounting the turbine slightly to the side of the tower so that high winds push the entire machine around the tower. Another simple approach relies on a wind vane mounted parallel to the plane of the blades. As winds get too strong, wind pressure on the vane rotates the machine away from the wind. (Wikipedia, 2010)

3.8 Solidity

Another important issue of HAWT is solidity. The higher the number of blades is, the greater the solidity. Solidity shows which part of the circle surface (A) consists of solid material. Great solidity means slow rotation and large torque. We want to convert, with the highest efficiency, the kinetic energy derived from the moving air into a rotational movement of the blades. The efficiency is limited by the Betz limit = 59.3%. So we must approach the Betz limit as closely as possible. Depending on the solidity, this Betz limit will be approached mostly from a different tip speed ratio (λ). The greater the solidity is, the lower the optimum tip speed ratio.

The tip speed ratio is the ratio between the speed of the tip of the blades and the undisturbed wind speed v

$$\lambda = \frac{V_{tip}}{V} \tag{16}$$

(Peuteman, Lecture Material 2, 2007)

3.9 The Rotor Efficiency

The rotor efficiency is also known as the the power coefficient. The tip speed ratio affects the angle δ, and thus the angle of attack α. So, the tip speed ratio affects the power coefficient C_P.

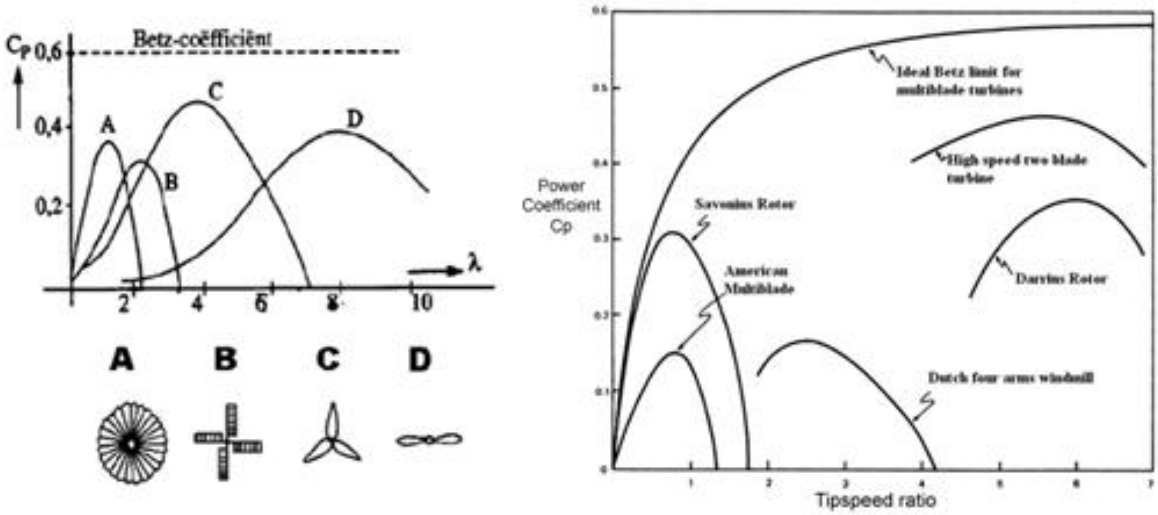

Figure 12. Rotor efficiency in function of tip speed ratio.

Figure 12 shows the power coefficient in the function of the tip speed ratio for different solidities.

If the tip speed ratio is too low:

- low efficiency,
- with low solidity and low wind speed, the blades are practically untouched by the wind. The wind cannot deliver energy.

If the tip speed ratio is too high:

- low efficiency,
- a too fast rotating blade creates too much turbulence in the air which still has influence at the time the next wick has already come.

If the tip speed ratio is an appropriate value:

- the maximum efficiency.

Wind turbines with many blades and a large blade area:

- slow rotation,
- high torque,
- designed for mechanical transmissions.

Wind turbines with a few blades and a smaller blade area:

- fast rotation,
- limited torque,
- designed for a generator that is coupled to a 50 Hz network.

On the right picture in Figure 12 we can see that an American multiblade (‘Western Wheel’) rotates slowly, with an tip speed ratio λ of less than 1 and maximum efficiency about 30%. The two- and three-blade rotors rotate faster, with an tip speed ratio λ of 4 to 8 and maximum efficiencies around 40–50%. The ideal efficiency approaches the Betz limit as the rotor speed increases. The curvature in the ideal efficiency line shows us that a slowly rotating rotor captures all the wind, which reduces the maximum efficiency below the Betz limit.

For many wind turbines, the speed of the generator is higher than the speed of the blades. For that reason, there is a gearbox with a speed ratio installed between blades and generator. If we compare a turbine with one or two blades versus a turbine with three wings, we notice some differences. The turbine with 1 or 2 blades will rotate faster. So there is a gearbox required with a limited speed. The turbine

is cheaper and the assembly is easier. However, today almost all turbines are three-bladed. A turbine with three blades runs slower and makes less noise. Slow rotating blades are less affected by erosion. The maximum efficiency is also higher. The ripple on the developed torque due to the shadow of the mast is smaller for a turbine with three blades (see Figure 10). This variation of torque is a serious load on the mechanical parts and will reduce the lifespan. For each tip speed ratio, we need to set a different pitch angle in order to maximize Cp and the power output.

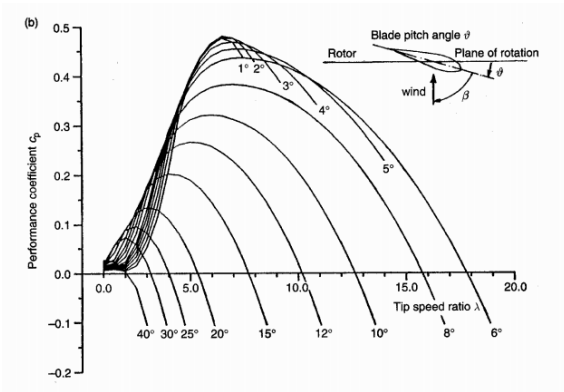

Figure 13. Power coefficient in function of the pitch angle.

For example, a synchronous generator is grid connected with a fixed 50Hz frequency. The rotational speed is also fixed. In this case the tip speed ratio will change with a changing windspeed. Therefore, we must tune the pitch angle at several values to obtain a maximum Cp. Low pitch angles in combination with low tip speed ratios λ ensures that the coefficient is also low. To start up up a wind turbine, the peripheral speed is very low. For low tip speed ratios λ, an average C_p can be obtained by settinng up high pitch angles. In Figure 13 we can see the pitch angle in function of the power coefficient, for a certain wind turbine. (Peuteman, Lecture Material 2, 2007) (Ragheb, 2009)

3.10 Aerodynamics of Wind Turbines

3.10.1 Lift and Drag Force

Aerodynamics deals with the motion of the air and the forces acting on the blades moving through the air. Aerodynamic theories developed for airplanes were determined for defining the performance of wind turbines. To understand how we get energy from wind into a rotational motion, we must have knowledge of two forces: Drag force and Lift force.

Let us consider an airfoil cross section, shown in the Figure 14. An airfoil takes advantage of Bernoulli's principle to obtain a lift. The air moving over the top of the airfoil has a longer distance to pass before it can rejoin the air that took the short cut, under the foil. So the air pressure on top of the airfoil is lower than under the airfoil, which creates a lift moment. The lift force causes a wind turbine blade to rotate.

Figure 14. Airfoil cross section.

Describing the forces on a wind turbine blade is a more complicated than explained above. A rotating turbine blade sees air moving towards it not only from the wind itself, but also from the relative motion of the blade when it rotates. In Figure 15 we can see two vectors which are corresponding to the wind and the blade motion. The resulting wind is moving across the airfoil at the correct angle to obtain the lift force that rotates the rotor.

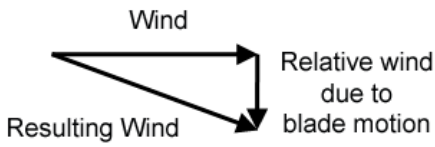

Figure 15. Vector representation of the wind.

The component of the force perpendicular to the direction of the undisturbed flow is called the lift force L. The force in the direction of the undisturbed wind is called the drag force D.

$$L = C_L \cdot \frac{1}{2} \cdot \rho \cdot A \cdot v^2 \tag{17}$$

$$D = C_D \cdot \frac{1}{2} \cdot \rho \cdot A \cdot v^2 \tag{18}$$

Where C_L and C_D are the lift and drag coefficients respectively.

The drag force and lift force combine the resultant forces F1 and F2. The resulting force F1 creates a torque, which makes the blades rotate and drives the generator. F1 is useful and required, but the resulting F2 is not useful. The tower and the entire mechanical structure must be strong enough to resist that F2. See Figure 16.

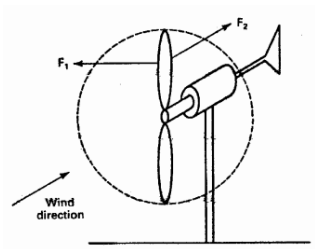

Figure 16. Forces on the wind turbine.

→ F2 is the force perpendicular to the circular area.

The forces are dependent on several parameters:

- wind speed,

- rotation speed of the wicks,
- diameter of the blade,
- pitch angle,
- angle of attack.

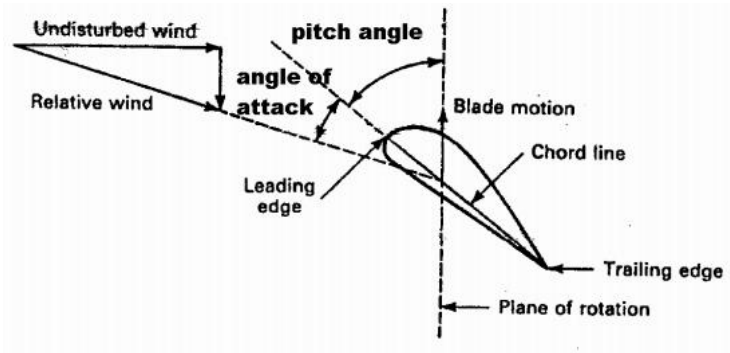

Figure 17. Pitch angle and angle of attack.

The chord line is the angle between the pitch and the rotation plane. (Peuteman, Lecture Material 2, 2007) (Masters, 2004)

3.10.2 Pitch Angle and Angle of Attack

The angle between the chord line and the plane of rotation is called the pitch angle. The absolute undisturbed wind is perpendicular to the plane of rotation, and parallel to the axis of turbine. $\rightarrow v_{1ax}$

The angle between the airfoil and the wind is called the angle of attack and improves lift at the expense of increased drag.

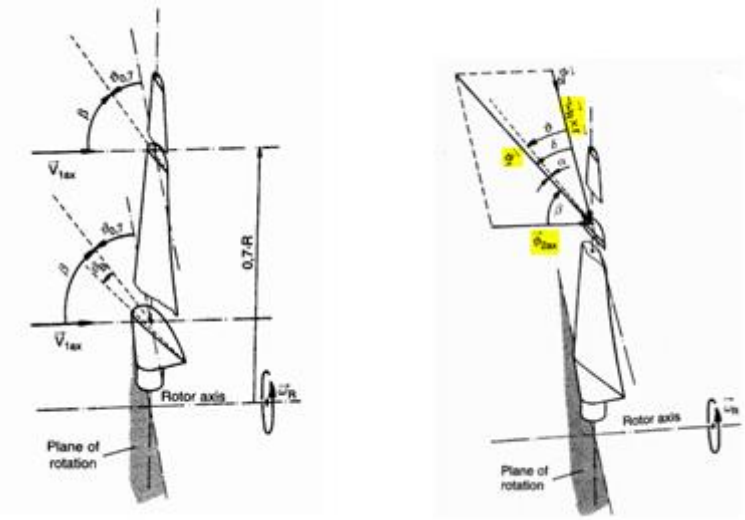

Figure 18. Pitch angle and angle of attack – 3D.

Figure 18 shows:

- the wind speed v_{2ax} in the axial direction,
- at a radius r from the rotation axis, the rotor moves with speed: $r.w$,
- the sum of both velocities gives us the wind speed compared to the rotor blade,
- the angle between the resultant wind speed and the chord of the airfoil: the angle of attack α,
- the pitch angle θ,
- the angle $\delta = \theta + \alpha$.

(Peuteman, Lecture Material 2, 2007)

3.11 Pitch Control

In general we have two different types of turbines, a fixed-speed turbine and a variable-speed turbine. A fixed-speed wind turbine runs at constant speed and frequency. That means that the power can only be optimized at one certain wind speed. But the wind is fluctuating, so the turbine can not deliver always the high-

est power. It would be advantageous to operate the wind turbine at variable speed, which allows capturing more energy from the wind.

The variable speed wind generator output needs to be controlled to make it suitable for feeding the customer load. The higher the wind speed, the higher the power generated. To avoid overloading, we keep the wind turbine at constant speed at high wind speeds. This can be achieved by either pitch control or converter/inverter control.

Pitch control is a method of controlling the speed of a wind turbine by changing the orientation of the blades. In this way we can change the aerodynamics and efficiency and thus the produced generated power. Pitch control is relatively fast and it is used to regulate power flow especially when near the high speed limit. Figure 13 showed us that for each tip speed ratio, we need to set a different pitch angle in order to maximize Cp and the power output.

The second way to control the speed of a wind turbine is the converter/inverter control. By controlling the generator in the correct way, we can generate a braking torque. In that way we can regulate the speed of the rotor blades and keep the tip speed ratio constant. In that case, pitch control will only be used for the fine tuning. Pitch control will respond to the relative wind speed (see Figure 15) and optimize the angle of attack (see Figure 17). (Peuteman, Lecture Material 3, 2007)

3.12 Power Produced by Pitch Control

If the wind speed increases more, then Cp will reduce a little, but P_{el} will increase more. The turbine and generator cannot resist that high power. An increase in power cannot be tolerated. If we look at the power curve (Figure 5), we see that above the rated windspeed the power does not increase. By controlling the pitch angle, Cp will decrease and we keep the power on the nominal value. Figure 19 shows how we can decrease the rotor efficiency by increasing the pitch angle.

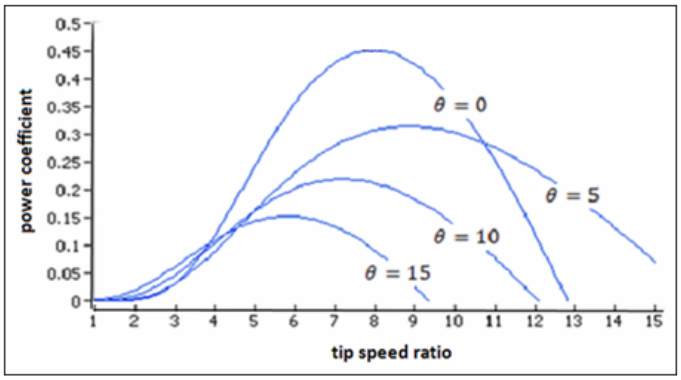

Figure 19. Power in function of tip speed ratio and pitch angle.

If the wind speed increases above the shut-down windspeed, the blades turn automatically in the feathered position, so the power production will be shut down. This avoids damaging the wind turbine (for example, by strong winds). (National-Instruments, 2011)

3.13 Power Produced by Stall Position

Using pitch control ensures that the turbine above the nominal wind speed will continue to operate. The stall position provides an alternative approach to increase the capacity above the rated wind speed, so it will keep the turbine in operation. For stall control it is not necessary to twist the blades. The shape of the blades has been designed so that the wind speed decreases automatically above the nominal rotor efficiency.

When a rotor blade stalls, the airflow over the top no longer sticks to the surface and the resulting turbulence destroys lift. At the right side of Figure 20, we can see the stall position.

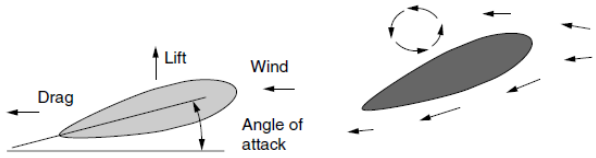

Figure 20. Stall position.

The principle of stall position is easier and cheaper than the principle of pitch control . There is no mechanism necessary for rotating the blades. A pitch control mechanism is fragile and it also has some inertia. The stall effect occurs very fast even the respons to strong winds are possible. When the stall effect occurs, there are more drag forces. The mechanical structure must be strong enough to resist this kind of forces. (Masters, 2004)

4 WIND TURBINE GENERATORS - IN THEORY

4.1 Introduction

The blades of a wind turbine convert kinetic energy in the moving wind into rotating shaft power to rotate the axis of the generator. The generator produces electrical energy.

4.2 Generator

A generator converts mechanical energy into electrical energy. The generator consists of two main parts. The first one is a rotor that spins inside of a stationary body of the generator. The body or housing is the second part, called the stator. With a generator we can produce electricity by moving conductors (wires) through a magnetic field. While cutting the lines of flux, caused by the magnetic field, voltage and current will be generated.

4.3 Gearbox

When using a gearbox , the blades are connected to the generator. The speed of the blades (e.g. 20 rpm) is much lower than the speed of the generator (1000 or 1500 rpm). The low speed of the blades will be increased by the gearbox. Increasing the speed means a proportional reduction of torque.

Using a gearbox has its disadvantages:

- occupies place,
- it is an investment and takes the a lot of maintenance,
- produces noise,
- high efficiency (> 99%), but not 100% which means losses and heating,
- it is connected to the blades which are exposed to wind gusts and change of wind direction.

(Peuteman, Generatoren, 2010)

4.4 Importance of Variable Rotor Speed

Figure 12 shows us that a three-blade wind turbine operates best with a tip speed ratio between 4 and 6. To achieve the maximum efficiency, we have to change the tip speed of the blades when the wind speed is changing. In Figure 21, we can see that C_P is quite flat near the peak. Continuous adjustment of the rotor speed is moderately better than a few discrete steps. Figure 21 shows us varying wind speeds with the corresponding rotor speed.

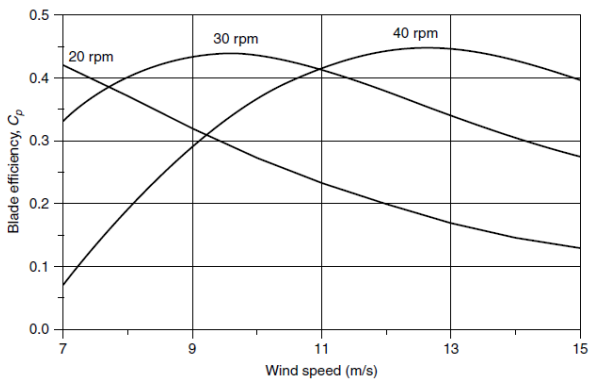

Figure 21. Variable rotor speeds with switchable number of poles.

- Low wind speeds → 20 rpm.
- Medium speed → 30 rpm.
- High wind speeds → 40 rpm.

The inefficiency of the fixed speed solution can be seen at the power production curves in Figure 22.

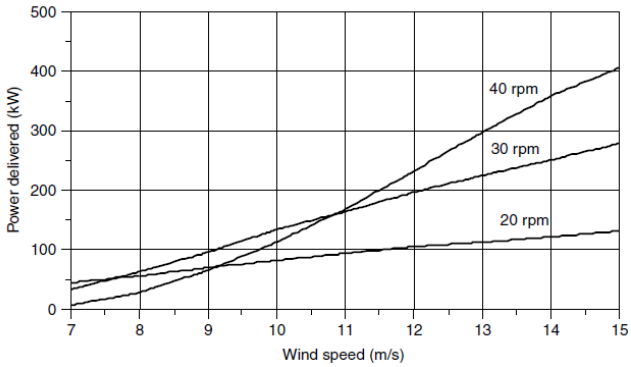

Figure 22. Power production in function of the wind speed.

- The higher the wind speed, the higher the required speed.
- The higher the speed, the higher the generated power.

A wind turbine that can operate with a variable speed has many advantages:

- possibility to obtain the maximum rotor efficiency over a wide range of wind speeds,
- gusts of wind could be captured by speed changes. The generator will not produce more electrical power. The power output is more constant.
- with an adjustable pitch angle, a low cut-in wind speed can be obtained,
- at low wind speeds, we can run the wings slower so in that way we produce less noise,

Disadvantages:

- the power electronics are expensive.

(Masters, 2004)

4.5 The Asynchronous Induction Generator

An induction machine (asynchronous machine) can act as a motor or even as a generator. Both methods of operation can be found in wind turbines with induc-

tion machines. During the start-up, the induction machine acts like a motor and when the wind picks up, the induction machine acts as a generator.

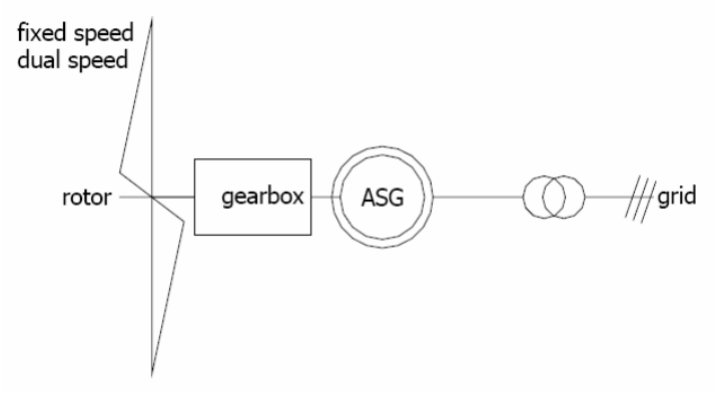

Figure 23. Asynchronous induction generator.

Induction machines are divided into two versions:

1. the wired rotor: expensive, maintenance (exciter, brushes and slip rings),
2. the squirrel cage rotor: less complicated, cheap, wide variety of power classes, less maintenance, long lifespan (used with inverter solutions), etc.

(Peuteman, Generatoren, 2010)

4.5.1 Torque-Speed Characteristic

Consider the torque-speed characteristic of an induction motor in Figure 24:

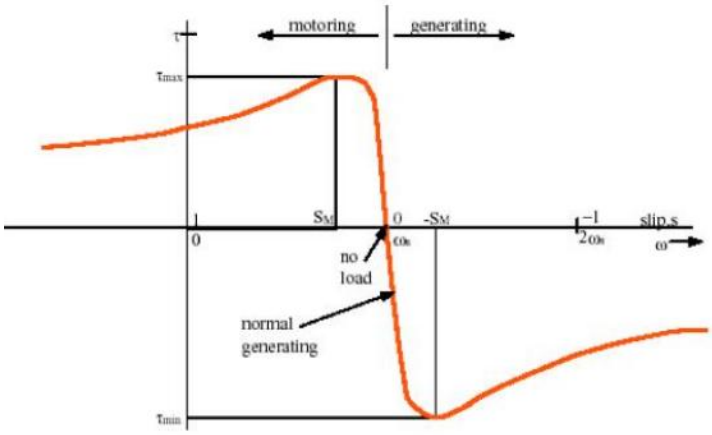

Figure 24. Torque-speed characteristic of an induction motor.

When the load exceeds the breakdown torque (T_{MAX}), the increasing slip will no longer affect the load. The rotor will stop. Here S_M is the maximum slip. The torque-speed curve shows the slip and the speed

$$w_S = 2\pi \,.\, f_S \tag{19}$$

- Under the synchronous speed: motor operation, slip > 0.
- Above the synchronous speed: generator operation, slip < 0.
- When the machine acts like a motor, the operating regime has a slip between 0 and S_m.
- When the machine acts like a generator, the operating regime has slip between 0 and $-S_m$.

An induction machine with a cage rotor has a small S_M. Suppose that the wind turbine drives a generator. Because of the small S_M , the speed cannot vary widely. We can say that the speed is constant and equal to the synchronous speed. The fact that the speed can vary (a little) is useful to capture a sudden gust of wind. The extra energy can be stored temporarily as kinetic energy due the speed of the blades slightly increases. The generator converts mechanical energy into electrical energy and produces an active electrical power.

$$P = w \, . T \tag{20}$$

An induction machine (both motor and generator) consumes reactive power. Reactive power is necessary to create a magnetic field. The asynchronous generator consumes reactive power Q. That reactive power must be delivered by the grid. With external capacitors, the generator can provide its own reactive power. This allows power generation without the grid (island operation). (Masters, 2004)

4.6 Rotor Speed Control

4.6.1 Indirect Grid Connection Systems

Indirect grid connection can be done when we allow the wind turbine to rotate at the speed that is needed to produce the maximum amount of power. Depending on the wind speed, the electrical output of the generator will have a variable frequency. A generator that delivers a variable frequency cannot be connected directly to the grid. We can solve this problem with a frequency converter installed between the generator and the grid. The variable frequency (AC) from the generator will be rectified and converted into a DC voltage. Then the inverter will converts the DC back into AC with 50Hz frequency. (Peuteman, Generatoren, 2010)

4.6.2 Switchable Number of Poles

The aim is to get the maximum energy from the wind. This implies the maximum efficiency C_P. A three-blade turbine has a tip speed ratio between 3 and 5 (see figure 14). Turbines with another number of blades have another tip speed ratio. But the tip speed ratio may not exceed certain limits. Suppose that the Cp curve is fixed and that the pitch angle of the blades cannot be changed. When the wind speed varies, by an constant rotation speed, then the tip speed ratio will change. The Cp may be too low. The aim is to keep a constant tip speed ratio when the wind speed is changing to achieve the maximum power efficiency C_P. A generator with switchable numbers of poles makes it possible to choose the speed of the generator (see formula (21)).

$$Ns = \frac{f\ .60}{p} \tag{21}$$

(Masters, 2004)

4.6.3 Several Gearboxes

Some wind turbines have two gearboxes. Both have a different speed ratio. Depending on wind speed, we use one or the other.

4.6.4 Asynchronous Generator with Variable Slip

When using an asynchronous squirrel cage generator, the rotor resistance is limited. This results in a small S_M and limited rotor speed variations. So there is no possibility to store temporarily energy after a gust of wind. If we could increase the rotor resistance, we would also increase S_M. Then the speed of the generator can vary within a wider area. The use of variable resistors requires an electrical connection between the rotor and resistors. Unfortunately, we cannot integrate this in a squirrel cage motor. Therefore, we use an asynchronous motor. Using slip rings and brushes we can connect resistors in series with the rotor windings.

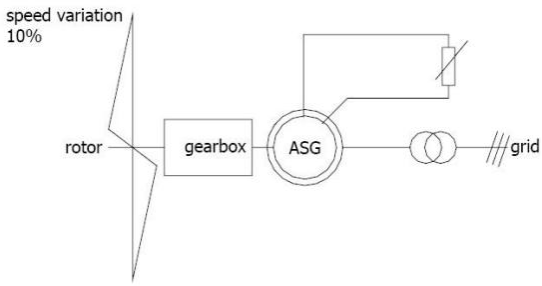

Figure 25. Asynchronous generator with variable slip.

With a higher rotor resistance we be obtain a higher S_M and speed variations of about 10%.

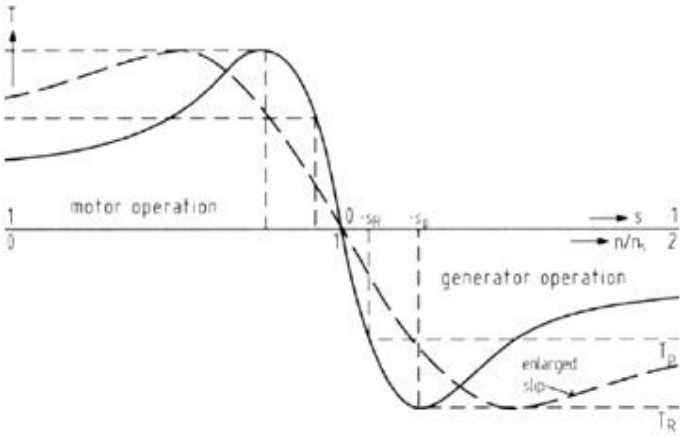

Figure 26. Torque-speed characteristic higher rotor resistance.

A wound rotor has more disadvantages:

- wound rotor and rotor resistors are an expensive investment,
- heat dissipation in rotor resistors,
- brushes and slip rings require more maintenance.

(Peuteman, Generatoren, 2010)

4.6.5 Double Fed Induction Generator

Speed variations are possible between 20 to 30%. The stator of the induction generator is connected to the grid. Using a transformer and an inverter the energy can be controlled in two directions:

- energy from the rotor to the grid,
- energy from the grid to the rotor.

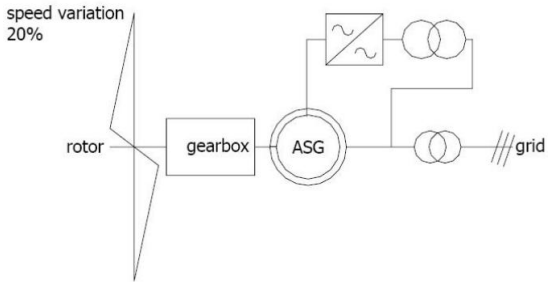

Figure 27. Double fed induction generator.

When using a frequency converter, the induction motor can consume electrical power, and return power into to grid. Contrary to a resistor, we can inject power into the grid, instead of converting power into heat. (Peuteman, Generatoren, 2010)

4.7 Synchronous Generators

A synchronous generator, which consists of a rotating rotor and a stationary stator, converts the mechanical energy from a turbine into electrical energy. The rotor is supplied with a DC current. The rotating rotor and the current through the rotor result in a magnetic field. The rotor acts like an electromagnet. That magnetic field causes a current in the stator, where the rotor speed is (= synchronous) is the equal to the frequency of the stator current.

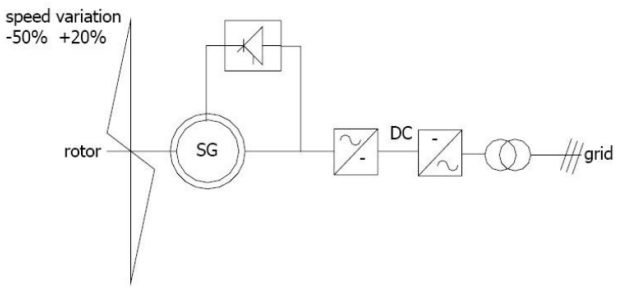

Figure 28. Synchronous generator.

In the stator a three-phase voltage will be an induced, proportional to the rotor speed. When the blades are running with a different speed, a different frequency

will be generated. This will be rectified and an inverter converts the DC current to an appropriate 50Hz voltage, connected to the grid. The generator has a high number of pole pairs, so even at low rotational speeds a normal AC frequency can be generated. That makes it possible to operate without a gearbox.

Advantages:

- no gearbox needed → no friction and this makes it also to get a lower cut-in speed,
- can work within a wide speed range → wind turbine with variable speed,
- a synchronous generator can deliver reactive power by over excitation. By under excitation, the generator will use reactive power. The reactive power of generator is also variable.

Disadvantages:

- a synchronous generator is more expensive than a squirrel cage generator,
- a DC-source is required to rectify the rotor (exciter),
- the complete stator power must be rectified with and then converted to 50 Hz,
- the inverter is an expensive investment. There is no 100% efficiency and cooling is required.
- Slip rings, brushes, etc. require maintenance

(Peuteman, Generatoren, 2010)

4.8 Permanent Magnet Generator

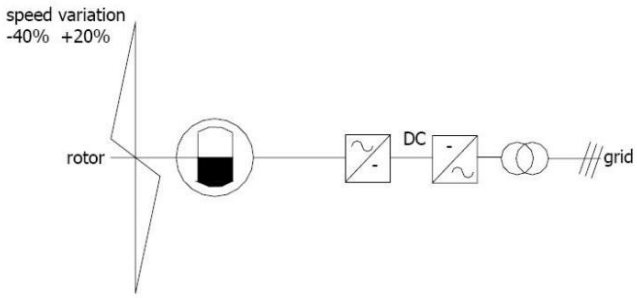

Figure 29. Permanent magnet generator.

The mode is similar to a direct drive system with a synchronous generator. A generator with permanent magnets is a synchronous generator. Permanent magnets are mounted in the rotor, not electromagnets. So there is no heat generation.

Compared to a synchronous generator; the advantages are:

- no electromagnets → no DC source is required,
- a compact design is possible. No need of excitation windings.

Disadvantages:

- the intensity of the permanent magnet cannot be regulated,
- permanent magnets motors are quite expensive.

(Peuteman, Generatoren, 2010)

5 FREQUENCY CONTROL OF A THREE-PHASE INDUCTION MACHINE

5.1 Introduction

Nowadays, saving energy is a very important issue. It is true that about a half of the electricity of the world is used for motors. Most of these motors are driven without a frequency converter. In this case the motor can only be driven at full speed or at zero speed. With a frequency converter the motor can be driven in a wide range of frequencies. The converter can also save up 30% of energy.

With a frequency converter, both the voltage and frequency of the motor can be regulated depending on the desired speed or desired torque. Frequency converters are generally used to control the speed of many applications. In this project, a frequency converter is integrated to control the rotational speed of a three phase induction machine. The inverter controls the frequency of the power, supplied to the motor, which acts like the wind.

5.2 Speed control of an AC motor

Most of the AC motors are directly connected to the grid and are not regulated in speed. In order to regulate the speed there are some possibilities:

1. Pool switchable motors have two fixed speeds, these speeds depend on the number of poles (see formula (21)):

- 8 poles 750 rpm,
- 6 poles 1000 rpm,
- 4 poles 1500 rpm,
- 2 poles 3000 rpm.

2. Voltage control (this principle can be used for, the stator and the rotor).
   With the rotor voltage control, we use slip ring motors. The voltage can be controlled using resistors, transformers and thyristor controllers. The efficien-

cy of speed control using voltage control is very low. The heat losses in the motor or the resistance at speeds below the rated speed are therefore high.

3. Frequency converters

5.3 Frequency converter: structure

A frequency converter is a device that converts the supply voltage into a voltage with a variable voltage/frequency ratio. In figure 30 we can see that the frequency converter consists of four parts. The line filter filters the current of the converter to avoid grid distortion in the grid. Secondly, we have the converter that converts the AC current into a DC current. To convert the supply voltage into a voltage with a variable frequency we have to rectify the AC voltage into a DC voltage, and after that it has to be converted back to an AC voltage. The third part of the frequency converter is a DC-capacitor, which balances the DC voltage. Without this capacitor, the DC-voltage would fluctuate while switching the IGBTs . The inverter is the last part of the frequency converter and generates the needed frequency from the DC-voltage, by switching phases to the higher DC-voltage and to the lower DC-voltage. There are many different modulation methods for the inverter. An inverter needs must be ‘active’, because the wanted voltage needs to be controllable.

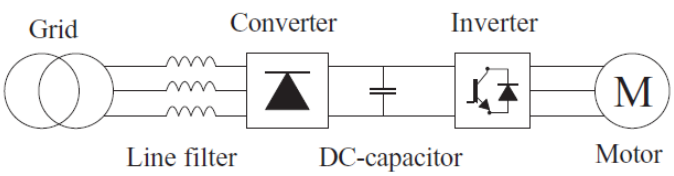

Figure 30. Different parts of a frequency converter.

Figure 31 shows a diode rectifier (left side) and an IGBT bridge (the right side).

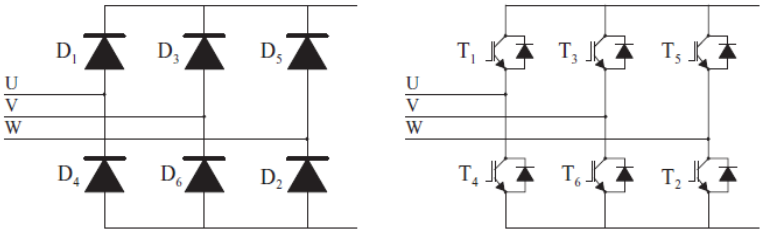

Figure 31. Diode rectifier and an IGBT bridge.

(Purhonen, 2008)

5.4 Variable Frequency Control of Induction Motor

The synchronous speed (see formula (21)) is proportional to the supply frequency. We can change the synchronous speed and also the motor speed, by changing the supply frequency.

The voltage induced in the stator E is proportional to the product of the slip frequency and air gap flux. The motor terminal voltage can be considered proportional to the product of the frequency and the flux. Any reduction in the supply frequency without a change in the terminal voltage causes an increase in the air-gap flux. Induction motors are designed to operate at the knee point of the magnetization characteristics to make full use of the magnetic material. Therefore, the increase in flux will saturate the motor. This will increase the magnetizing current, distort the line current and voltage, increase the core loss and the stator copper loss, and produce a high pitch acoustic noise. While any increase in flux above the nominal is not allowed because of saturation, a decrease in flux is also avoided to retain the torque capability of the motor. Therefore, the variable frequency control below the rated frequency is generally carried out by reducing the voltage along with the frequency in such a manner that the flux stays constant. Above the rated frequency, the motor is operated at a constant voltage because of the limitation imposed by stator insulation or by supply voltage limitations. (Purhonen, 2008)

5.5 Methods for Frequency Controlled Induction Motor Drive

5.5.1 Variable Frequency AC Motor Drive

The variable frequency drive, also known as a volts per-hertz, changes the frequency and the voltage of the motor with solid-state control units.

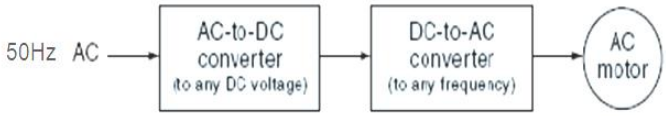

Figure 32. Block diagram of a variable speed control system.

First, the AC frequency (50Hz) will be converted into DC power. Then the DC power will be converted back into AC but with a variable frequency. (Purhonen, 2008)

5.5.2 Variable Frequency with Pulse Width Modulation

Variable frequency with pulse width modulation (PMW) varies the duty cycle of the converter switches at a high switching frequency. In that way we achieve a low frequency output voltage or current. The aim of a modulation schemes is to create pulse trains which have the same volt/second average as a target reference waveform at any instant. The problem with these pulse trains is that they also contain unwanted harmonic components.

5.6 Using a Frequency Converter

Nowadays, almost all frequency converters belong to the type of voltage source inverter. As I explained earlier in this thesis, with a rectifier the three phase voltage can be converted into a fixed DC voltage. A pulse pattern converts the fixed DC voltage into a three phase frequency controlled voltage. This pulse pattern is called "Pulse Width Modulation" and consists of pulse trains so that the motor responds as if a real three phase sinusoidal voltage is applied to the motor. The

pulse pattern can regulate both the frequency and voltage simultaneously. Controlling the voltage is necessary because the impedance of the motor changes with varying frequencies. If we do not regulate the voltage (below 50 Hz), the motor will be rectified and also warms up.

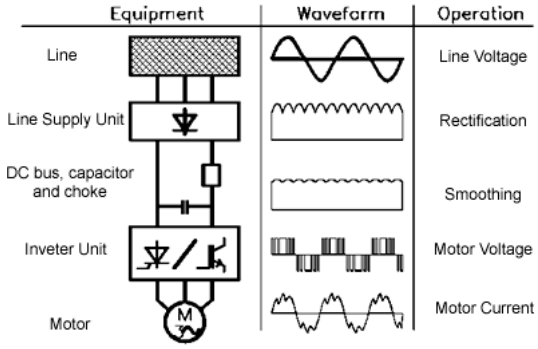

Figure 33. Frequency converter – different wave forms.

Advantages of a frequency converter:

- current during the start is never more than 1,5 to 2 times the rated current while still a high torque can be achieved,
- with a heavy load, the motor cannot stick in the saddle point,
- the motor decreases gradually with the variable start time,
- the speed is adjustable,
- full torque at every speed.

(Purhonen, 2008) (ABB, Principe's van AC Aandrijvingen, 2002)

5.7 Frequency Converter - Operation

The inverter is supplied by the grid with a constant frequency and constant voltage. The conversion of the voltage with a fixed frequency to a voltage with a variable frequency is done in two steps.

First, the input voltage will be rectified and smoothed to a DC voltage. The rectification is done by a rectifier bridge and smoothed by a number of capacitors. Se-

condly, the DC voltage will be converted to three AC voltages with a phase difference of 120°. The AC voltages have a variable frequency and voltage. The inverter is constructed of semiconductors, IGBTs (Insulated Gate Bipolar Transistor). These IGBT's are like two high speed switches. The variable voltage and frequency is made by pulse width modulation (PWM). With PWM we can switch the voltage alternating between 0 and the maximum voltage, therefore the average value is lower. So, a sine-wave voltage can be created.

Figure 34 shows the basic circuit topology of pulse-width modulated inverter drive.

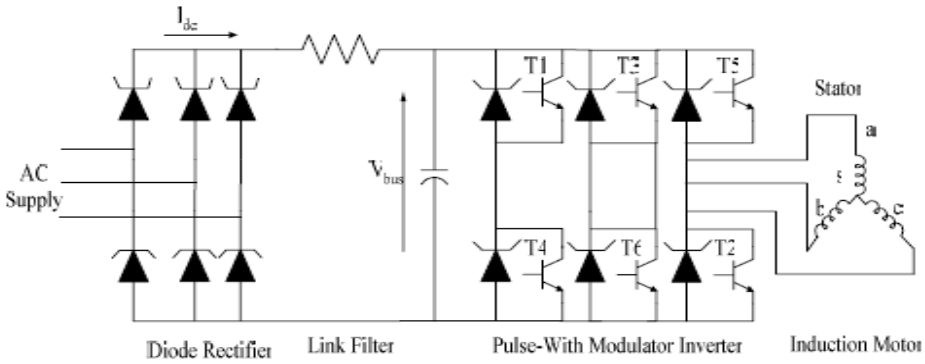

Figure 34. Topology of pulse-width modulated.

Figure 35 shows us a regular asymmetrically sampled pulse width modulation.

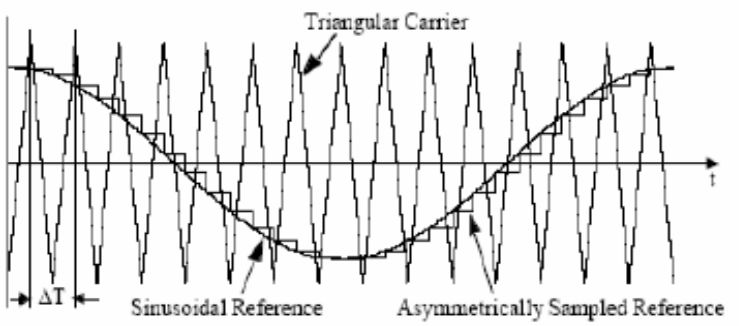

Figure 35. Control signal of PWM.

We can divide the frequency controller in three parts.

1. Power section: consists of rectifier bridge, capacitors and inverters.

2. Gate driver, voltage and current measurements: this part is the interface between the high voltage of the power electronics and the low voltage of control electronics.
3. Control unit with microcontroller and control inputs and outputs, analog inputs and outputs and digital control module. (Purhonen, 2008)

5.8 I.G.B.T - Insulated Gate Bipolar Transistor

An I.G.B.T. is used in the inverter. An IGBT is constructed of an input MOSFET, and an output that consists of Darlington transistors. Because the control signal of the IGBT is given on the input MOSFET, this component will be 'opened' with a positive voltage Ug on the gate. For IGBTs, we use also drivers which can deliver the required control power. The required control power is low due to the very high input resistance of the MOSFET. Because of the good pass and blocking properties the power transistors can conduct large currents. (Koopman, 2009)

5.9 Line Filters

The high switching frequencies create disturbance pulses with frequencies above 30 MHz. Installations with sensitive measurement and control equipment, such as load cells, temperature measurements and capacitive sensors may be affected by the disturbance pulses.

These pulses can enter the system on different ways:

- the first way is through capacitive or electromagnetic coupling between the motor cables and measuring wires of the inverters. This problem can be solved easily with new installation by using shielded motor cables.
- The second way is via the supply line of the inverter. An installation with CE standardization contains line filters for the controller. These line filters absorb disturbance pulses.

(Koopman, 2009)

5.10 Active Front End

The Active Front End (A.F.E) is a frequency control system that allows us to work without harmonic pollution. Each frequency converter contributes to the total harmonic pollution. To limit this harmonic pollution, there are different systems, e.g. active and passive filters and also multi-pulse drives. Another and better solution is an Active Front End of AFE. This technology decreases the harmonic pollution of the inverter to (almost) zero.

Due to ‘current power conversion’ technologies, including the input rectifiers in PWM inverter drives, very significant harmonic currents are produced. These currents have a harmful effect on the performance of other equipment and distort the applied voltage. Today, electricity supply companies implement limits in order to restrict the harmonics exported to the network.

One of the main parts of a frequency converter is the converter that converts the AC current into a DC current. A converter can be active or passive. For example a diode rectifier is a passive converter. The disadvantage of a diode rectifier is that we are not able to change anything. A passive converter, such as an active front end converter (AFE), is controllable. An IGBT bridge is an active converter that allows changing the switching times. In this way, we can optimize the power factor and control the DC-voltage. Another major advantage of an AFE converter is that it enables the possibility of returning power into the grid. With a diode rectifier we can only pass the power in one direction.

A standard AC PWM drive consists of an input diode rectifier, DC bus and IGBT output inverter stage. In an AFE drive, the input rectifier is replaced by another IGBT bridge. This is shown in Figure 36.

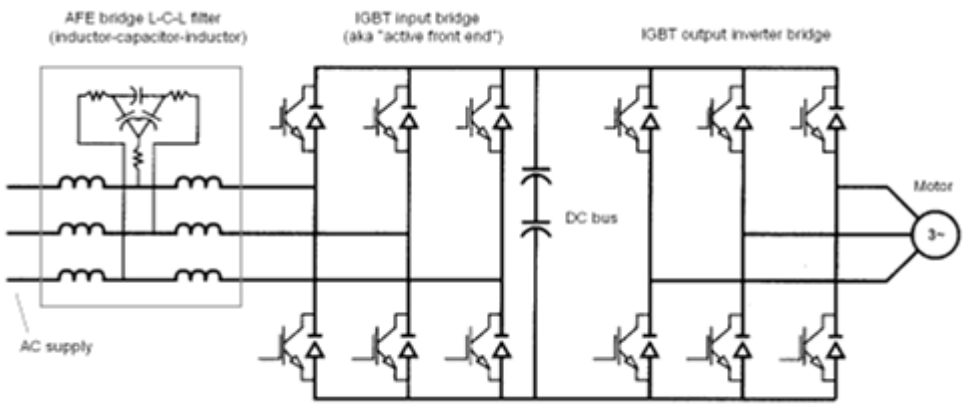

Figure 36. Active front end converter.

(Purhonen, 2008) (Evans, 2009)

5.11 Relationship between Flux, Voltage and Frequency

$$U_f = 4{,}44 \,.\, f \,.\, \Phi \tag{22}$$

The flux in an induction motor may not exceed its nominal value, otherwise the iron core of the motor turns into saturation. If we control the motor with a lower frequency than the nominal, the voltage should drop also to keep its nominal flux. This is shown in formula (23).

$$\frac{U_{f1}}{U_{f2}} = \frac{\mathrm{f1}}{\mathrm{f2}} \tag{23}$$

This results in the following graph:

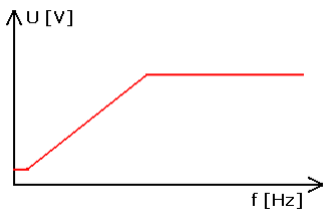

Figure 37. U/f regulation.

At high frequencies, the voltage remains at the nominal value, while the frequency increases. This results in a lower flux and the area is called the field weakening. They will never go close to zero of the graph, because then the load on the motor will be too large.

$$Xh1 = w\,.L \tag{24}$$

At high frequencies → $Xh1$ is very high.

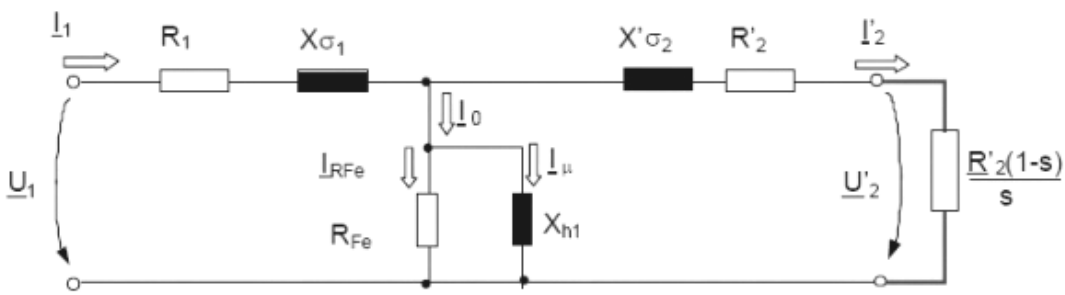

Figure 38. Equivalent circuit of induction motor.

(ABB, Principe's van AC Aandrijvingen, 2002) (Gielen, 2007)

5.12 Voltage/Frequency Ratio

Regulating the frequency is not enough to regulate the speed of an AC motor. The stator windings of a motor can be seen as a coil with a resistor in series. The formula for the impedance of a coil is:

$$Z = j.w.L \tag{25}$$

Where,

- Z is the impedance of the coil
- L is the self inductance

$$w = 2.\pi.f \tag{26}$$

The formula shows us that the impedance is dependent on the frequency. If we reduce the frequency while keeping the voltage as a constant, the motor current will be infinite at 0 Hz. To prevent this, the voltage in the frequency converter must be proportional to the frequency. This is called the V/Hz. ratio. The stator winding consists of a coil with a resistance (= copper resistance or field winding):

$$Z = j.w.L + R \tag{27}$$

We know that the resistance is independent of frequency and it is also present at lower frequencies. That means that the impact of the resistance is bigger than the impedance of the coil. Considering the influence of this resistance, it is possible to change the V/Hz ratio for lower frequencies to. (ABB, IR Compensation, 2011)

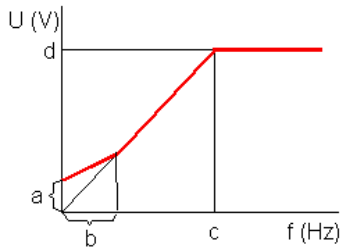

Figure 39. IR compensation.

Figure 39 shows us:

- a = IR compensation voltage
- b = IR compensation range
- c = Field weakening point
- d = Max. output voltage

5.13 Constant flux and field weakening

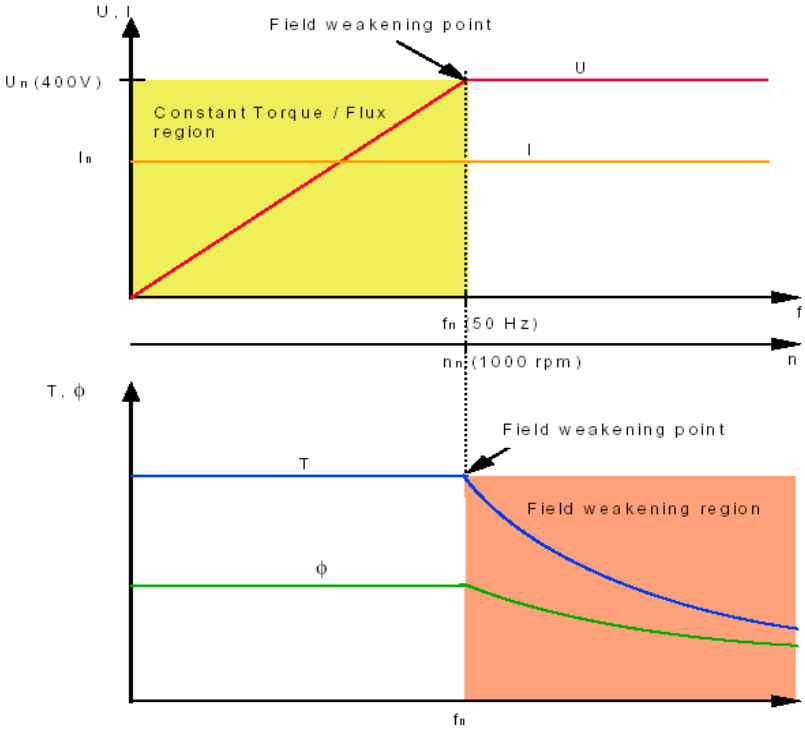

Figure 40. Constant flux and field weakening.

$$\Phi \approx \frac{U}{f} \tag{28}$$

$$T \approx \frac{U}{f^2} \tag{29}$$

In Figure 40 we can see:

- the speed range below the field weakening point has a constant flux,
- above the field weakening point, the motor assumes on a constant power,

$$P = U . I \tag{30}$$

- the maximum available torque is constant, if the flux in the air gap is also constant. The flux in the air gap is approximately constant when the relationship between the frequency and voltage to the motor is a constant.
- above the field weakening point the maximum amount of torque decreases inversely proportional to the square of frequency ($f_{act} > f_n \Rightarrow T_{maxmot} \approx (f_n / f_{act}^2)$),
- the flux also decreases inversely proportional above this point ($f_{act} > f_n \Rightarrow \phi \approx (f_n / f_{act})$).

(ABB, Principe's van AC Aandrijvingen, 2002)

5.13.1 Limitation at Low Frequencies

Standard AC motors are equipped with a cooling fan which is driven by the engine itself, which means that the fan airflow quadratically increases with the rotational speed. This means that the cooling fan, while running the motor below 20 Hz, cannot blow enough air to cool the motor at full torque. For this reason we limit torque at 60%, at frequencies below 5Hz.

(ABB, Principe's van AC Aandrijvingen, 2002)

→ In this project, a motor is mechanically connected with a generator. The generator of a real wind turbine does not have a cooling fan. So we have to be careful and observe the current and generator temperature. This frequency converter has a parameter that calculates the motor temperature to protect the motor.

6 THESIS SET UP

This thesis investigates the possibility to keep the tip speed ratio constant by generating an electric braking torque with the generator. In this way we can respond to the tip speed of the blades and keep the power coefficient at its maximum.

This research took place in a laboratory, without real wind. Therefore, we need a hardware model of wind turbine, instead of a real wind turbine. A motor, controlled by a frequency converter and mechanically coupled to the shaft of the generator simulated the wind. A second inverter connected to the generator generated a braking torque. And a inverter was able to deliver power to the grid.

Using a PLC we were able to integrate a wind pattern in order to simulate a real wind with the motor. The wind pattern is based on data from the manufacturer. Two computers with the NC drive application were connected to the inverters and ensure to set the parameters of motor and generator.

Once the set up was ready, we could integrate the different control principles. Preliminary research showed us that we can use a speed control or torque control. Both principles were implemented, compared and considered.

6.1 Laboratory Preparation

In Figure 41 we can see an electrical set up of a wind turbine. This set up consists of blades, a generator, a frequency converter, an inverter and an Active Frond End converter.

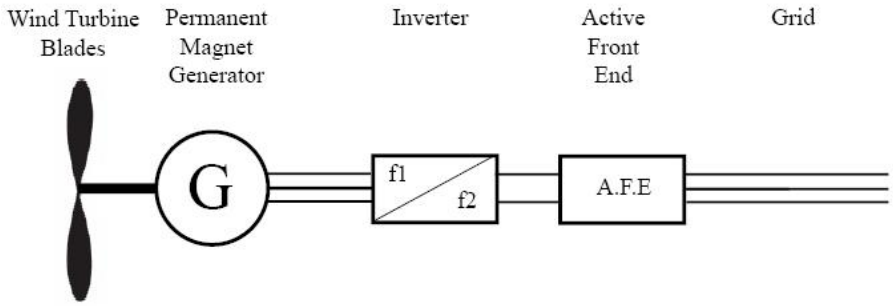

Figure 41. Electrical set up of a wind turbine.

Because this research takes place in a laboratory without wind, we have to replace the blades by an induction motor, controlled by a frequency converter. In Figure 42 we can see the actual laboratory set up.

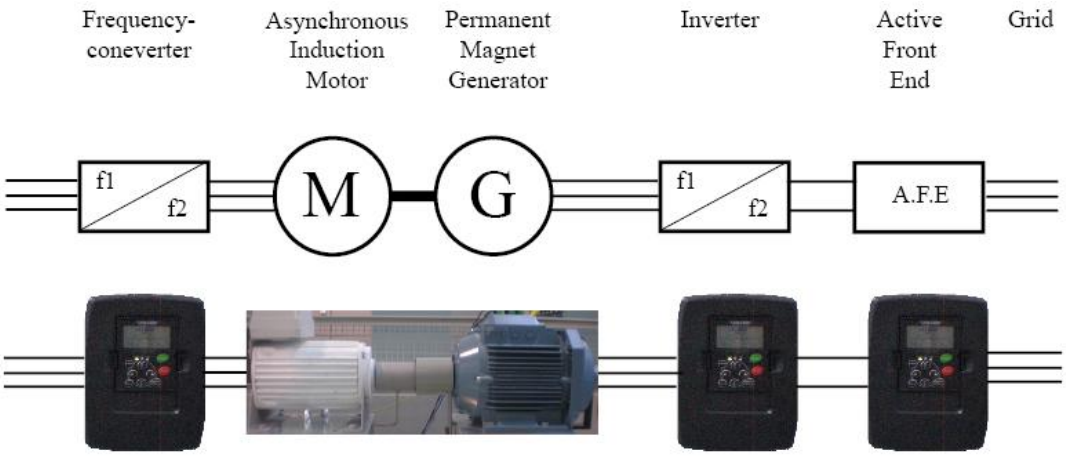

Figure 42. Laboratory set up.

6.2 Components of the Laboratory Set Up

6.2.1 Motor

The thesis set-up in the lab consists of several components. To begin, we have a 4kW motor mechanical connected to a generator. Both axes are connected. Table 1 shows the data plate from the motor:

Table 1. Rating plate motor.

4kW Motor		
400	V	Y
960	r/min	
4	kW	
10	A	
0,68	cos φ	

With this information and formula (20), we can calculate the torque:

$$P = w\,.T \rightarrow T = \frac{P}{w} = \frac{4000}{2\pi\,.\frac{960}{60}} = 39{,}79Nm \tag{31}$$

6.2.2 Generator

Secondly we have a 2kW generator disconnected from a small wind turbine. The generator does not have a rating plate, so it is not easy to find out the generator data. With a little help from the manufacturer, we find out the following information:

Table 2. Rating plate of the generator.

2kW Generator	
380	Rpm
360	V Un
4	pole pairs

Now we can calculate the nominal current:

$$I_N = \frac{\mathrm{P}}{\sqrt{3}.U_N} = \frac{2000}{\sqrt{3}\,.360} = 3{,}21\mathrm{A} \tag{32}$$

If we consider that cosφ = 1.

With Formula (33), we can find:

$$T = \frac{P}{w} = \frac{2000}{2\pi\,.\frac{380}{60}} = 50Nm$$

6.3 VACON – Frequency Converter

Both motor and generator are connected to a frequency converter. The converters have hardware with certain software. Depending on the application, other software can be installed. For high power applications, we can extend the system with optional modules. The software or 'system interface application' is typically used in coordinated drives with overriding control system. The recommended interface to control the system is a Fieldbus communication but also hardwired analogue and digital signals as well as keypad and PC control can be used. The system interface application uses one of the most advanced motor control functions in NXP software and is suitable for different drive systems.

In this project we used three frequency converters. To control the generator, we will use two converters and to control the motor (wind) we will use one converter. Figure 43 shows a schematic representation of the frequency converters, which are controlling the generator. Notice the two converters. With two converters we can control not only the generator, but we are also able to control the power in both directions.

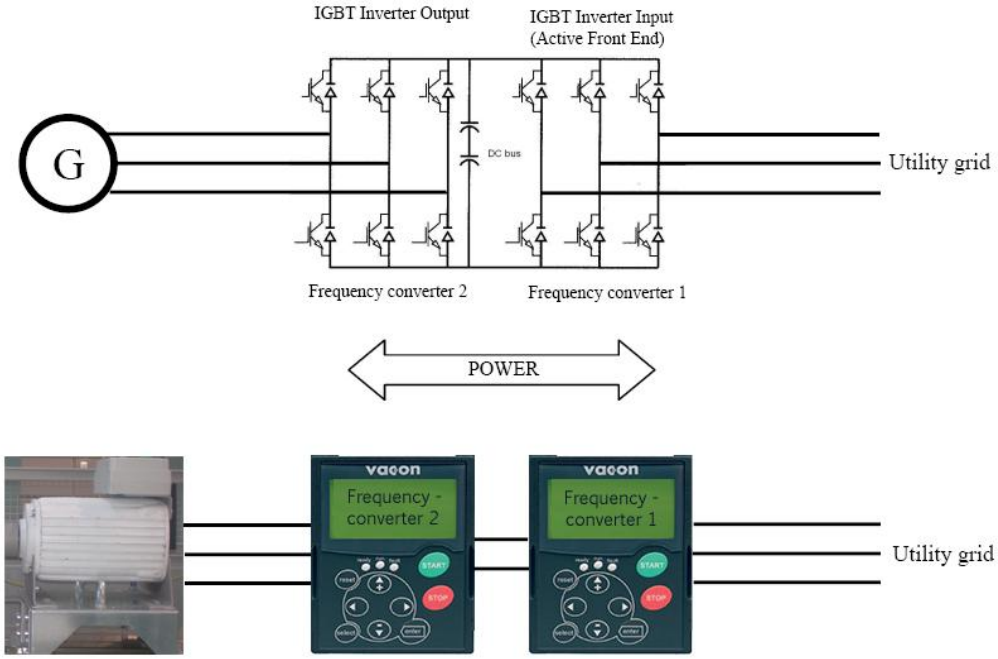

Figure 43. Schematic representation of the frequency (grid side).

With the third frequency converter we can control the motor. The motor is mechanically connected to the generator, so the electrical power needs to flow only to one direction. This is shown in Figure 44.

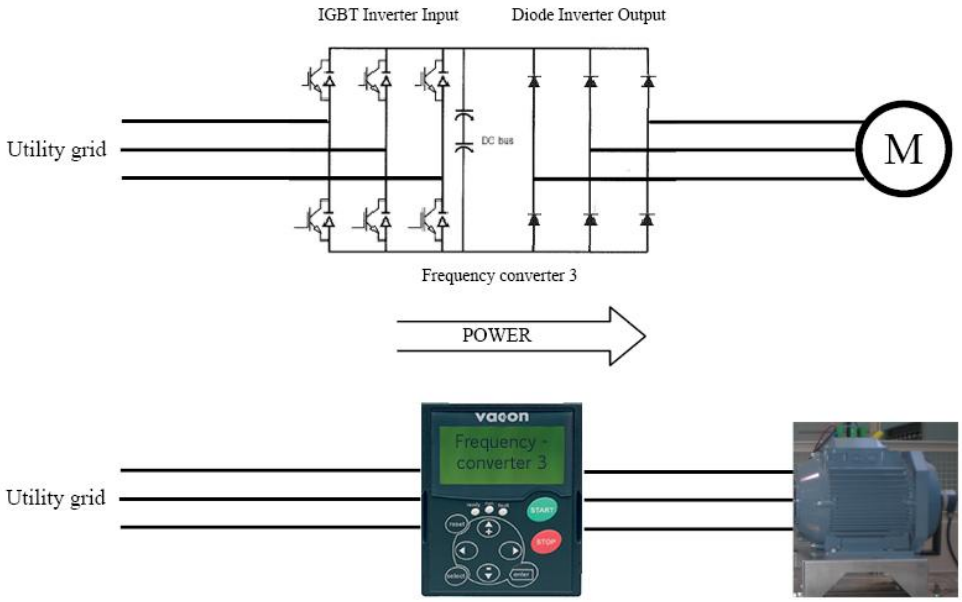

Figure 44. Schematic representation of the frequency converters (wind side).

6.4 NC-Drive

In order to set the frequency converters we use NC Drive. Two computers in this laboratory are equipped with the NC Drive application. Both computers are connected to the frequency converters, one via an RS232 serial cable and the other via a shielded Ethernet cable. In the beginning, both computers were connected with an RS232. Because of communication problems and slow data transfer, we were required to connect one computer to a fast Ethernet cable. The complete connection is shown in Figure 45.

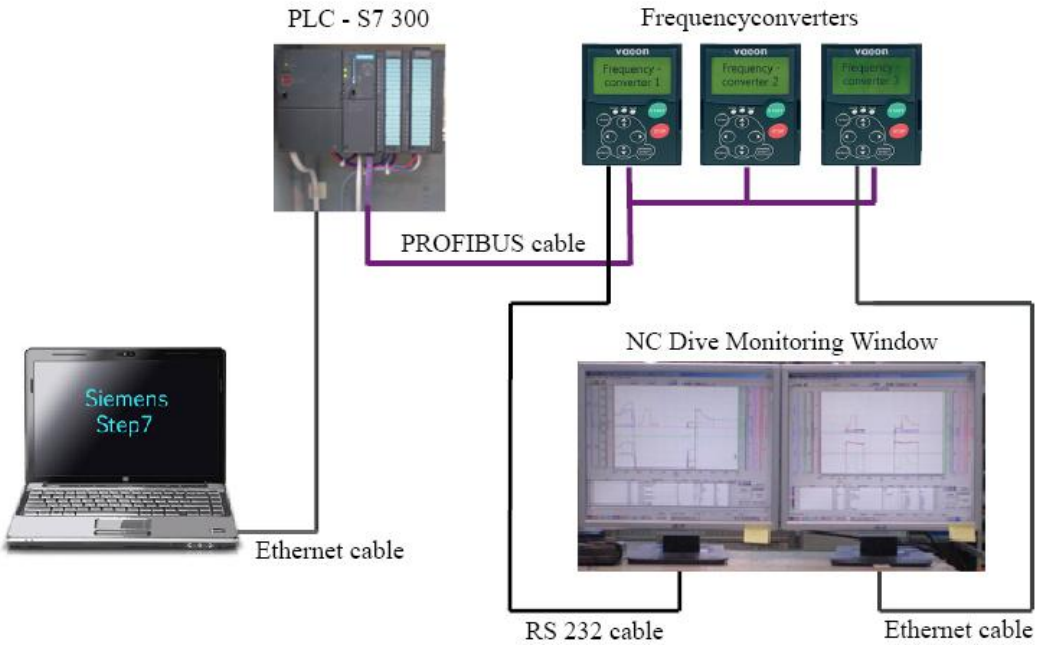

Figure 45. Laboratory set-up.

6.4.1 Parameters

The next step was to set the correct parameters for the generator and motor. This can be done with a NC Drive. Each drive, generator and motor, has its own computer with the NC Drive application. According to the data plate of both drives, we can set the correct parameters. These can be found in the list of parameters in Figure 46.

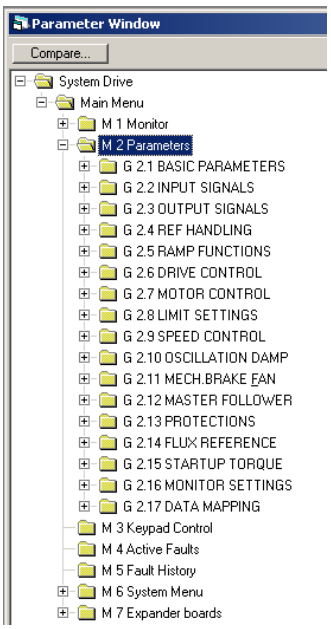

Figure 46. List of parameters.

6.4.2 Basic Parameters

There are many different detailed parameters, but the basic parameters are still the most important. See figure 47.

Index	Variable Text	Value	Default	Unit	Min	Max
P 2.1.1	Supply Voltage	400		V	0	1000
P 2.1.2	Motor Nom Volts	360		V	180	700
P 2.1.3	Motor Nom Freq	31,66		Hz	30,00	320,00
P 2.1.4	Motor Nom Currnt	3,4		A	0,0	18,0
P 2.1.5	Motor Nom Speed	380		rpm	300	1899
P 2.1.6	Motor Cos Phi	0,95			0,30	1,00
P 2.1.7	Process Speed	296,0		rpm	0,0	6553,5
P 2.1.8	Magn. Current	0,3		A	0,0	3,4
P 2.1.9	Field Weakng Pnt	31,66		Hz	8,00	320,00
P 2.1.10	Voltage at FWP	100,00		%	5,00	200,00
P 2.1.11	ID Run	0 / None			0	4
P 2.1.12	Motor Type	2 / PMSM			0	3

Figure 47. Basic parameters.

6.4.3 Process Speed

This parameter is used to scale the speed signal in terms of the process speed. This speed value corresponds to value of the parameter P2.4.5 FB Ref Scale for the speed reference written from the Fieldbus. Process Speed = 1600 then drive will run with the speed reference of 1600rpm when the speed reference from Fieldbus is written as 20000. In this project, we use a generator with a nominal speed of 380rpm. If we calculate the frequency:

$$Ns = \frac{f\,.60}{p} \rightarrow f = \frac{Ns\,.p}{60} = \frac{380\,.4}{60} = 25{,}33Hz \qquad (33)$$

In the NC Drive, the minimum nominal frequency is 30Hz. That means that the nominal speed will be 450rpm instead of 380. We can solve this problem by setting up a higher process speed, ≈960 rpm instead of 380rpm. The magnetizing current creates the magnetic field. By setting up another frequency then necessary, (30Hz instead of 25,33Hz) the drive will be under magnetized. This is show in Figure 48. In order to solve this problem, we can change the field weakening point of 30Hz to 25Hz, see 6.4.6.

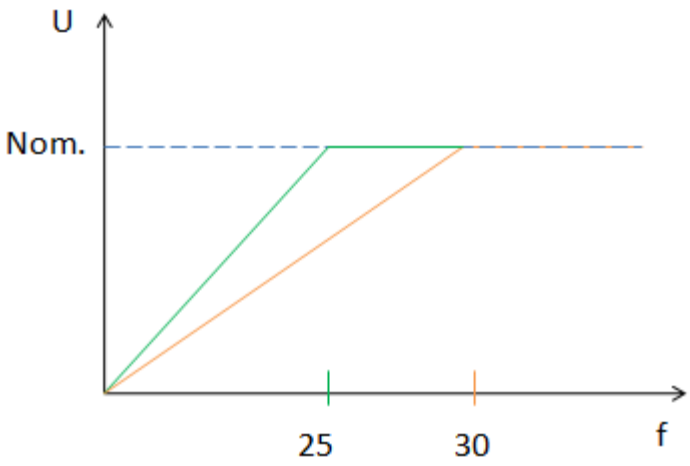

Figure 48. Under magnetizing.

6.4.4 Identification Run

The list of parameters contains also very detailed parameters, such as flux, current and field weakening point. To find this motor data, we can use the ID run. This function defines the different modes of the automatic motor identification run. We have to set the function and give the run command within 20 seconds to activate the identification. The result of the identification is seen in V1.1.19 ID Run Status.

Table 3. ID-run Generator

2kW Generator		
0,95	cos φ	
380	rpm	
493	VDC	open circuit
240	VDC	
8,7	A	

6.4.5 Magnetizing Current

The magnetizing current defines the nominal current for the motor corresponding to 100% flux. The value of the parameter (if not known) can be found out by the ID run.

6.4.6 Field Weakening Point

The field weakening point (FWP) is the output frequency at which the motor voltage reaches the value of voltage at FWP in percentage. In this case, we will change the FWP from 30Hz to 25Hz.

6.4.7 Limit Settings

Before we start to control the drives, we have to set the limits. These parameters will protect the drive and prevent damage. Parameters which are relevant for this thesis are speed current-and torque limits. We must pay attention to the limit of the generator in a correct way. The minimum speed is not zero, but on a negative side. After all, the generator can be controlled in two directions. The minimum speed is -380 rpm and the maximum speed is +380 rpm, these are nominal values of the data plate. The current limits are based on the nominal currents of the motor and generator. The limit parameters are shown in Figure 49.

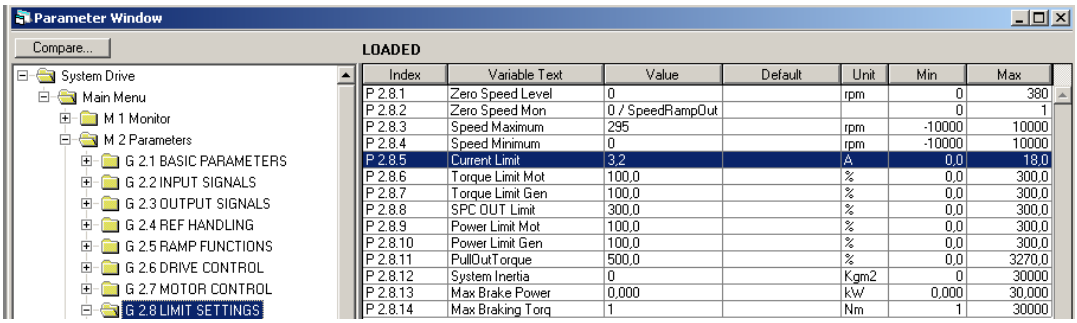

Index	Variable Text	Value	Default	Unit	Min	Max
P 2.8.1	Zero Speed Level	0		rpm	0	380
P 2.8.2	Zero Speed Mon	0 / SpeedRampOut			0	1
P 2.8.3	Speed Maximum	295		rpm	-10000	10000
P 2.8.4	Speed Minimum	0		rpm	-10000	10000
P 2.8.5	Current Limit	3,2		A	0,0	18,0
P 2.8.6	Torque Limit Mot	100,0		%	0,0	300,0
P 2.8.7	Torque Limit Gen	100,0		%	0,0	300,0
P 2.8.8	SPC OUT Limit	300,0		%	0,0	300,0
P 2.8.9	Power Limit Mot	100,0		%	0,0	300,0
P 2.8.10	Power Limit Gen	100,0		%	0,0	300,0
P 2.8.11	PullOutTorque	500,0		%	0,0	3270,0
P 2.8.12	System Inertia	0		Kgm2	0	30000
P 2.8.13	Max Brake Power	0,000		kW	0,000	30,000
P 2.8.14	Max Braking Torq	1		Nm	1	30000

Figure 49. Limit settings.

6.4.8 Motor Control

Another important parameter to control the drives is the ‘Torque selection’. In this mode we have five options, but only two of them are relevant for this thesis.

1. Speed. Closed loop speed control
2. Torque. This is the closed loop torque control.

More detailed information on these can be found in Chapter (give the chapter number)

6.4.9 Monitoring Window

After setting all the necessary parameters for both the motor and generator, we can save and upload them to the frequency converter. This can be done by the ‘on-line mode’ in the monitoring window. The monitoring window shows us a graphi-

cal overview of the measured values. We can determine these values by selecting them from a list. Values such as voltages, currents, power, torque, speed can be made visible by pressing the PLAY or PAUSE button. Figure 50 shows the graphical display.

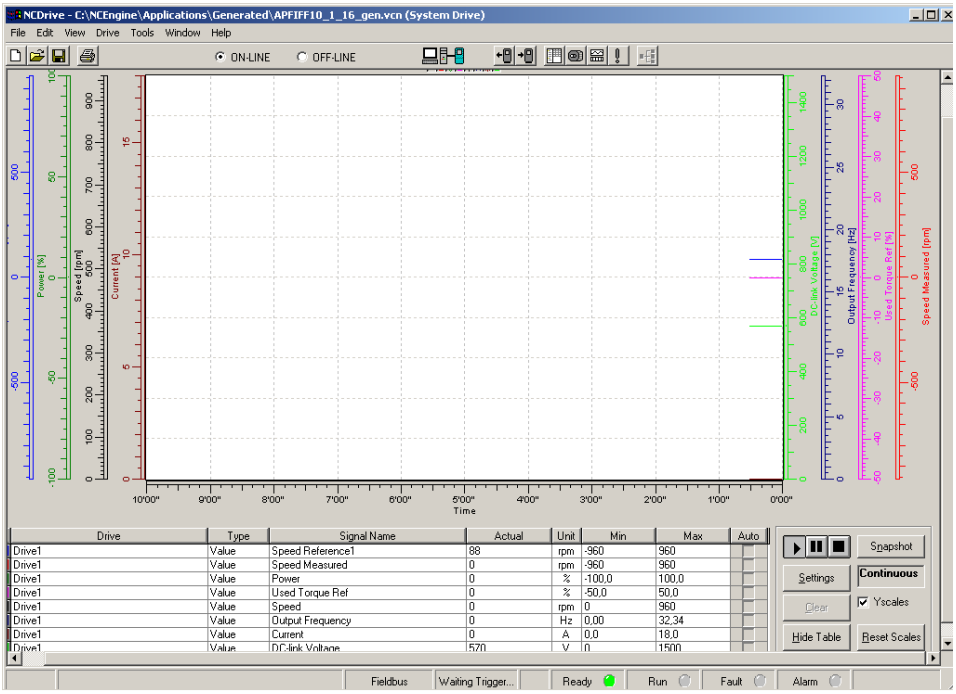

Figure 50. Monitoring window.

6.5 PLC – Step7

Figure 45 shows also a third computer with the Step7 application. This computer is connected with an Ethernet cable to the PLC. The PLC is connected with the drives via a PROFIBUS cable. With Step7 we created a program consisting of several networks that is able to control the frequency converters and thus both drives. The program can be found in the appendix (number) of this thesis. With Monitor/Modify Variables we can modify and view the variables which are programmed in Step7. The Monitor/Modify Variables are shown in figure 51.

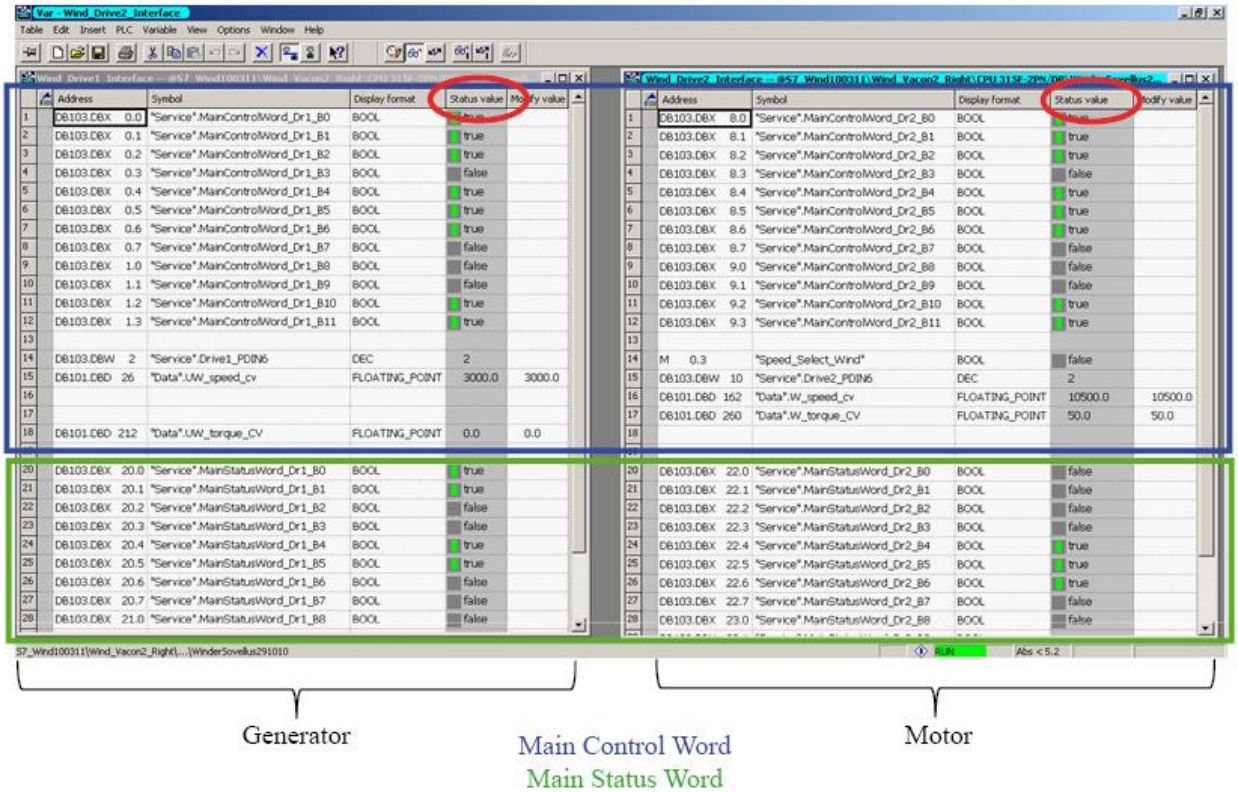

Figure 51. Monitor/Modify Variables.

Figure 51 shows how the screen is divided into two windows. For both motor and generator, we created Monitor/Modify/Values. Each screen has Main Control Words and Main Status Words. In the column of the Status Value, we can set the status of each parameter (ON/OFF – 1/0) or set a certain value (in this case) to torque or speed. Note that the input values are scaled. For the torque, we can set a value between 0 and 1000 and for the speed we can set a value between 0 and 10.000. These are relative to the nominal values of the torque and speed.

We notice that the variables in the monitor/modify variables are matching with the variables in the PLC program and they are also in line with the 'Main Control Word' and 'Main Status Word' of the frequency converter. This allows to control the frequency converter by controlling the programmed variables in the PLC. The table of the Main Control Word is shown in Figure 52 and table of the Main Status Word is shown in Figure 53.

Bit 0	On	0>1 will reset the Switch On Inhibit state and bring the drive to Rdy Run. Should be reset after fault and EmStop .
Bit 1	Coast Stop	0=Coast stop Active 1=Coast Stop not Active
Bit 2	Emergency Stop	0=Emergency stop active 1=Emergency stop not active EmStop Mode is selected by P2.7.3
Bit 3	Run	0= stops the drive as per Stop Mode P2.7.2 1= Run
Bit 4	Ramp Out Zero	0=Ramp Output forced to 0. 1=Ramp Output is released
Bit 5	Ramp Hold	0=Ramp is hold 1=ramp release
Bit 6	Ramp input Zero	0=Ramp input forced to 0.Stop by Ramp 1=Ramp input is released
Bit 7	Reset	0>1 Reset fault.
Bit 8	Inching 1	0=No Action 1=Run forward with Constant Speed set by P2.4.2
Bit 9	Inching 2	0=No Action 1=Run backward with Constant Speed set by P2.4.3
Bit 10	Fieldbus Control Enable	0=No control from Fieldbus possible 1=Drive control from profibus if P2.6.1 =0 Fieldbus
Bit 11	Watchdog	0>1>0>1...1 sec square wave clock. This is used to check data communication between profibus master and the drive. Used to generate FB Communication. Fault. This monitoring can be switched off by setting P2.14.26 PB Watchdog Delay =0.Drive´s internal communication monitoring is still active at this time.
Bit 12	Low	not used
Bit 13	Low	not used
Bit 14	Low	not used
Bit 15	Low	not used

Figure 52. Main Control Word.

(Rauma, 2006)

Bit 0	Rdy On	0=Drive not ready to switch on 1=Drive ready to switch on
Bit 1	Rdy Run	0=Drive not ready to run 1=Drive ready to run
Bit 2	Rdy Ref	0=Drive not running 1=Drive running and ready to release the reference
Bit 3	Fault	0=No active fault 1=Fault is active
Bit 4	Off2 Status	0=Coast Stop Active 1=Coast stop not active
Bit 5	Off3 Status	0=Emergency Stop active 1=Emergency stop not active
Bit 6	Drive Not Ready to Switch On	0=No inhibit 1=drive is out of fault or EmStop state. The ON bit in the main control word is then has to be reset.
Bit 7	Alarm	0=No alarm 1=Alarm active
Bit 8	At Set point	0= Speed Ref and Speed Actual are not same
Bit 9	Fieldbus Control Active	0=Fieldbus control not active 1=Fieldbus control active .P2.6.1 Control Place=0 Fieldbus and bit 10 of the Main control word is set.
Bit 10	Above Limit	0= Speed is below the limit specified by P2.4.14 1=The speed actual of the drive is above the set speed limit set by P2.4.14 Above Speed Limit.
Bit 11	Reserved	
Bit 12	Reserved	
Bit 13	Reserved	
Bit 14	Reserved	
Bit 15	Watchdog	Same as received on bit 11 of the main control word.

Figure 53. Main Status Word.

(Rauma, 2006)

6.5.1 OB35

The PLC program is written in the data block OB35. Each measurement is recorded in a database, and each measurement contains specific values. Every x number of milliseconds, the measured values are retrieved and written to the database. We used the DB module. The CPU will recall every x milliseconds of these blocks. In this program we are using OB35, so the block will be called by the CPU every 100ms. This is the frequency which each measurement to the data block is written.

The OB35 data blocks are used for critical processes that are either moving very fast or are in high-pressure situations. These data blocks take priority over everything else in the processor and run every 100 milliseconds to monitor critical situations that can change quickly.

7 POWER ALGORITHM

With modern inverter technologies we can adjust the speed of the wind turbine according to the wind speed of the wind. In this way we can keep the tip speed ratio as an optimum value. This technology is based on regenerative braking and is implemented in this thesis.

7.1 Regenerative braking area

In Figure 54 we can see the power curve of a wind turbine. Between the cut-in speed and the rated speed, the wind turbine is controlled with 'regenerative braking' method. In this area, the generator is controlled as a motor, and we can achieve the optimal tip speed ratio, and thus the maximum power coefficient. Between the rated wind speed and the cut-out wind speed, the turbine is controlled with a pitch control system to limit the generated power at high wind speeds. In this case we use a regenerative braking system instead of pitch control (see the green mark in Figure 54).

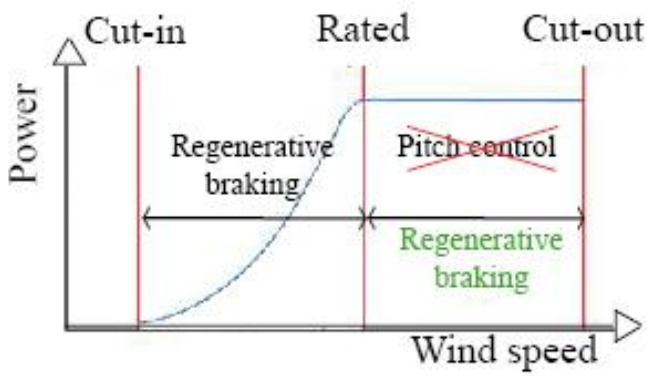

Figure 54. Power curve with pitch control and regenerative braking.

7.2 Wind Turbine Model

Figure 55 shows a control scheme of the braking torque implementation. Left, we can see that the wind model is integrated in the PLC.

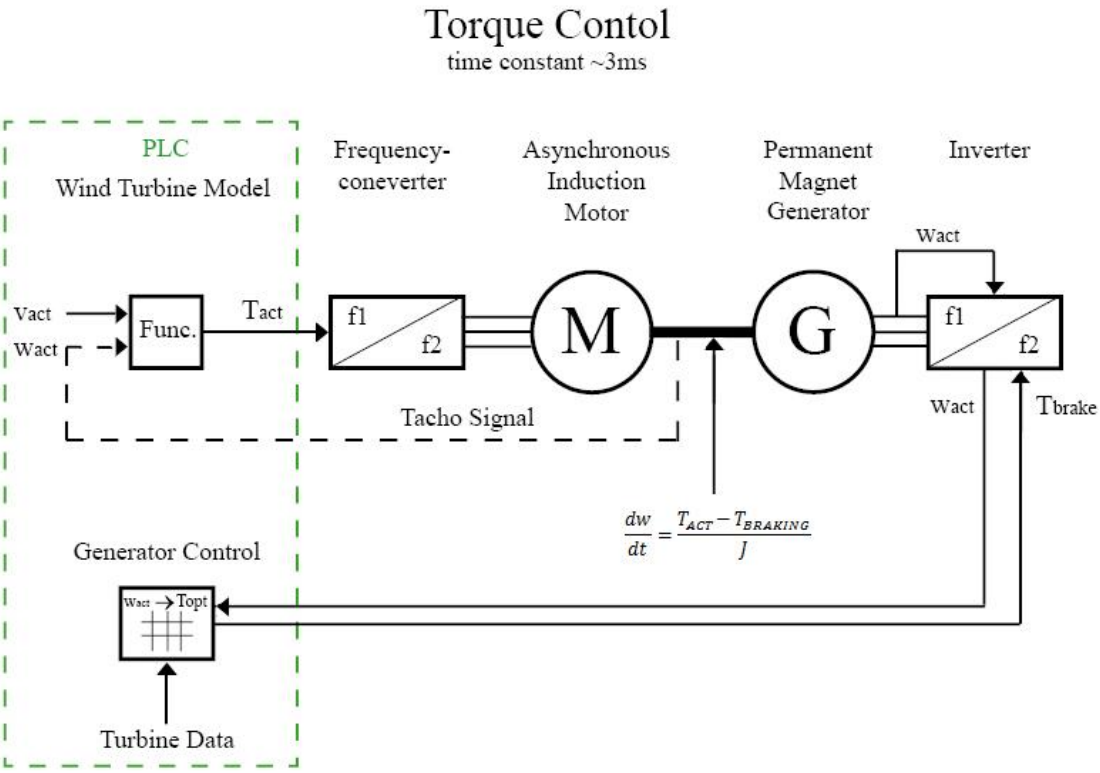

Figure 55. Control Scheme regenerative braking

This diagram is quite similar to Figure 43. On the right sight we can see the part of the PLC. The function block integrates the wind turbine model. With the wind speed v_{ACT} (user input) and the measured rotational speed w_{ACT} (tacho signal), we can calculate the torque T_{ACT}. This conversion can be done by integrating manufacturer's data, such as a Cp-λ curve, into the function block. If we know v_{ACT} and $w_{ACT,}$ we can calculate the tip seed ratio λ. Based on the tip speed ratio we can find the power coefficient C_P, the power P and the torque T_{ACT}.

Manufacturers of small wind turbines (2kW) give interesting data concerning wind speed, rotor speed and torque on the shaft. For this project it was important

to know which torque corresponds to a given wind speed. This torque appears in the optimal scenario, when we achieve the highest power efficiency and is called T_{OPT}. We can put these data (speed and torque) in a table and implement the table into the PLC program. The turbine data table is a part of the generator control and is show in Figure 55.

Let's consider this table as the desired value. With the motor we can simulate the wind. A certain wind speed (set up by the user) corresponds to a certain torque on the shaft of the generator T_{ACT}. For example, if the wind gives a higher torque then it will give more speed. The inverter will estimate the speed. Corresponding with the speed, the table will set the optimum torque in order to maximize the power coefficient. This results in a accelerating braking torque (T_{BRAKE} increases) which achieves the equilibrium at the optimal point (C_p = maximum).

$$T_{ACT} = T_{OPT} \rightarrow \lambda = \text{maximum} \rightarrow C_p = \text{maximum}$$

Now we can calculate the actual power:

$$P_{ACT} = P_{OPT} \cdot \left(1 - \frac{Cp_{ACT} - Cp_{OPT}}{Cp_{OPT}}\right) \tag{34}$$

An advantage of torque control compared to speed control lies in the difference of stiffness of the control system. Speed control keeps the rotor speed constant and does not allow speed changes when there are sudden wind speed changes. Therefore, a gust of wind can not be captured and ensures a resistance to the components (shaft, gearbox, tower, etc). Torque control can catch a gust of wind. When the wind speed and thus the torque on the shaft suddenly rises and then falls, the braking torque will also change in order to achieve the maximum power efficiency . In Figure 56 we can see the tracking properties of the torque control in Figure 55.

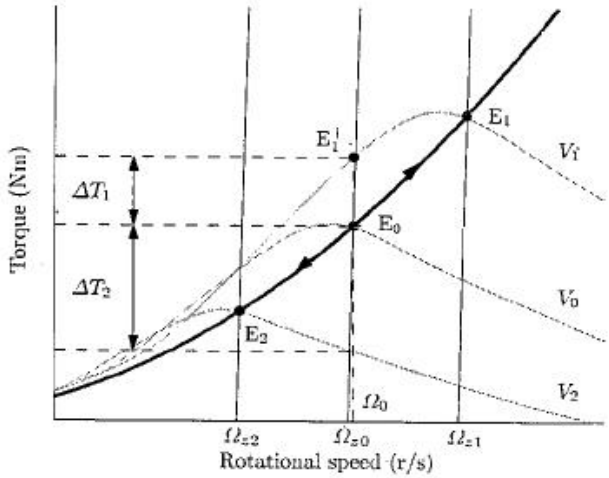

Figure 56. Tracking properties of the torque control scheme with speed feedback.

The bold black line shows the braking torque T_{BRAKE}. Let us start in point E_0. When the wind speed increases from v_0 to v_1 , the braking torque will increase from E_0 to E_1'. This results in an accelerating rotational speed of Ω_{Z0} to Ω_{Z1}. A new equilibrium can be found in E1. (Bianchi, 2007)

8 CONCLUSION

In this thesis we investigate how we can produce the maximum power at every wind speed. Nowadays, speed control with pitch control is used to achieve the maximum power efficiency.

The laboratory set-up is similar to a real wind turbine. A motor that simulates a wind pattern and a generator that produces power are both part of the wind turbine. Using a PLC, we are able to control both drives and to develop a power algorithm.

This project suggests how to generate an electrical braking torque with the generator, in order to maintain the optimum tip speed ratio at varying wind speeds. A constant tip speed ratio at varying wind speeds results in a maximum power efficiency and thus in the maximum power production.

With this power algorithm, small wind turbines without pitch control are able to produce the maximum power at every wind speed.

9 REFERENCES

ABB. (2011). *IR Compensation*. Retrieved from http://www.abb.com/product/ap/seitp322/c1256c84007b2e7ec12569030032aa44.aspx

ABB. (2002). *Principe's van AC Aandrijvingen.* Retrieved from www.ABB.com

Bianchi, F. D. (2007). *Wind Turbine Control Systems.*

Evans, I. C. (2009, March 23). *Using active front end drives – substance or spin?* Retrieved from http://www.worldpumps.com/view/816/using-active-front-end-drives-substance-or-spin-/

Gielen, R. (2007). *Frequentieregelaar.* Retrieved from http://dreaden.ulyssis.org/verslagen/vermogen/labo4_AF/labo_vermogen4.pdf

Koopman. (2009). *engineering-online*. Retrieved from Frequentieregelaar: http://www.engineering-online.nl/?com=content&action=frequency_converter

Masters, G. M. (2004). *Renewable and efficient electric power systems.* Hoboken, New Jersey: John Wiley & Sons, Inc.

National-Instruments. (2011, April 25). *Designing Controllers for a Doubly-Fed Wind Power System*. Retrieved 2011, from http://zone.ni.com/devzone/cda/epd/p/id/6272

Peuteman, J. (2010). *Generatoren*. Retrieved from https://cygnus.cc.kuleuven.be/webapps/portal/frameset.jsp?tab=null&url=/webapps/blackboard/execute/courseMain?course_id=_326683_1

Peuteman, J. (2007). *Lecture Material 1*. Retrieved from DIVERSE UITVOERINGSVORMEN BIJ WINDENERGIE: https://cygnus.cc.kuleuven.be/webapps/portal/frameset.jsp?tab=null&url=/webapps/blackboard/execute/courseMain?course_id=_326683_1

Peuteman, J. (2007). *Lecture Material 2.* Retrieved from STROMINGSLEER, VERMOGEN EN RENDEMENT: https://cygnus.cc.kuleuven.be/webapps/portal/frameset.jsp?tab=null&url=/webapps/blackboard/execute/courseMain?course_id=_326683_1

Peuteman, J. (2007). *Lecture Material 3.* Retrieved from PITCH CONTROLE: https://cygnus.cc.kuleuven.be/webapps/portal/frameset.jsp?tab=null&url=/webapps/blackboard/execute/courseMain?course_id=_326683_1

Purhonen, M. (2008, April 28). *APPLYING ACTIVE FRONT END TO MULTILEVEL.*

Ragheb, D. (2009, March 10). *OPTIMAL TIP SPEED RATIO.* Retrieved from https://netfiles.uiuc.edu/mragheb/www/NPRE%20475%20Wind%20Power%20Systems/Optimal%20Rotor%20Tip%20Speed%20Ratio.pdf

Rauma, A. (2006). System Interface Application. VACON.

Wikipedia. (2010, October 13). *Yaw System.* Retrieved 2011, from WikiPedia: http://en.wikipedia.org/wiki/Yaw_system