STRENGTHENING OF PETRA SLAB HANGER

Analysis of angle section

HAMK
HÄMEEN AMMATTIKORKEAKOULU
HÄME UNIVERSITY OF APPLIED SCIENCES

Bachelor’s thesis

Hämeenlinna University Centre, Degree Programme in Construction Engineering

Spring semester 2020

Mikhail Stoiko

HAMK
HÄMEEN AMMATTIKORKEAKOULU
HÄME UNIVERSITY OF APPLIED SCIENCES

Degree Programme in Construction Engineering
Hämeenlinna University Centre

Author Mikhail Stoiko **Year** 2020

Subject Strengthening of PETRA Slab Hanger

Supervisor(s) Cristina Tirteu, Jaakko Yrjölä

ABSTRACT

The purpose of this Bachelor's thesis was to analyse the behaviour of PETRA Slab Hanger and to develop a strengthening solution for the product. The research was commissioned by Peikko Group as a product development project.

The major part of the thesis consists of the analysis of PETRA Slab Hanger's design procedure. Based on the described limit states for the design of PETRA, a strengthening solution, its design procedure and justification of its relevance were introduced.

As a result, Peikko Group will have a versatile design tool for strengthening PETRA Slab Hanger.

Keywords L-profile, angle section, slab hanger

Pages 27 pages including appendices 67 pages

CONTENTS

1 INTRODUCTION 1

2 PETRA SLAB HANGER 2

2.1 Introduction to PETRA Slab Hanger 2
2.2 Description of principal structural parts 3

3 METHODOLOGY 3

3.1 Basis of design 3

4 GEOMETRY 4

4.1 Effect of side plate geometry on PETRA's structural behavior 5

5 STRUCTURAL ACTIONS 6

5.1 General 6
5.2 Load distribution 6
5.3 Load cases 8
5.4 Response of PETRA on design actions 8

6 CROSS-SECTIONAL PROPERTIES 9

6.1 Section centroid, neutral axis 9
6.2 Second moment of area 10
6.3 Product moment of area 10
6.4 Torsional constant 10

7 ANALYSIS 11

7.1 Side plate 11
7.2 Front plate 11
7.2.1 General 11
7.2.2 Torsion 11
7.2.3 Global bending 12
7.2.4 Local bending 12
7.3 Welds 13

8 STRENGTHENING 13

8.1 Preface 13
8.2 Front plate's failure analysis 13
8.3 Solution 14
8.4 Alternative solutions 15
8.5 Strategy 16
8.6 Design of strengthening component 17
8.7 Analysis of strengthened section 20
8.7.1 General 20
8.7.2 Welds 21
8.7.3 Additional points 25

9 CONCLUSION 25

REFERENCES..... 26

1 INTRODUCTION

The market is becoming more demanding towards standardized products. Many of those require deep and careful analysis, if the product is desired to exceed its standard properties. When such a demand is increasing, companies strive to broaden the range of standardized solutions.

When it comes to product development, the key thing is to understand the features of the product, its structural behavior and what the weak points are. Next comes ideation, then justification by research and finally application.

The aim of that thesis is to provide a strengthening solution for the PETRA Slab Hanger to comply with the demands of the market.

2 PETRA SLAB HANGER

Information mentioned within chapters 2-7 is an interpretation of the data published at Peikko Group Oy website, Technical manual 09.2016 and internal design handbook developed by Jan Bujnak (Peikko Group), 29.01.2010 and updated by Slavomir Matiasko (Peikko Group), 15.06.2015.

2.1 Introduction to PETRA Slab Hanger

PETRA Slab Hanger typically consists of L-shaped front plate welded together with similarly shaped side plates (Figure 1). It is used to support slabs and make openings in slab floors as shown in Figure 2.

Figure 1. PETRA Slab Hanger (Peikko Group Oy n.d.).

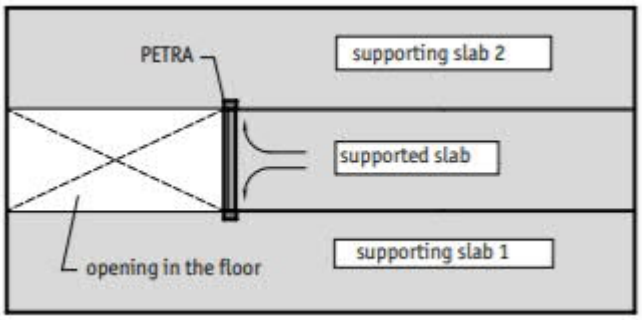

Figure 2. Typical layout of hollow-core floor with PETRA (Peikko Group Oy 2016).

2.2 Description of principal structural parts

The names of structural parts applied in this document are described in Figure 3 below.

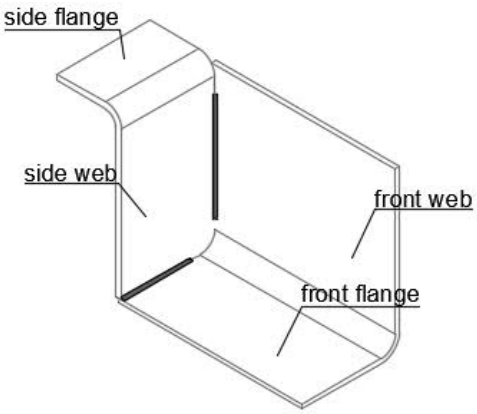

Figure 3. Principal structural parts of the PETRA Slab Hanger

3 METHODOLOGY

3.1 Basis of design

That thesis topic does not cover structural fire design; however, the design of PETRA Slab Hanger complies with the following standards:

1. SFS-EN 1990: Basis of structural design
2. SFS-EN 1991-1-1: Actions on structures – Part 1-1: General actions – Densities, self-weight, imposed loads for buildings
3. SFS-EN 1991-1-2: Actions on structures – Part 1-2: General actions – Actions on structures exposed to fire
4. SFS-EN 1992-1-1: Design of concrete structures – Part 1-1: General rules and rules for buildings
5. SFS-EN 1992-1-2: Design of concrete structures – Part 1-2: General rules – Structural fire design
6. SFS-EN 1993-1-1: Design of steel structures – Part 1-1: General rules and rules for buildings
7. SFS-EN 1993-1-2: Design of steel structures – Part 1-2: General rules – Structural fire design
8. SFS-EN 1993-1-8: Design of steel structures – Part 1-8: Design of joints
9. EN 1168: Precast concrete products – Hollow core slabs

4 GEOMETRY

The geometry of PETRA Slab Hanger depends on the floor layout.
The length L_1 of the front plate is determined by the width of the floor opening. The height h_1 of the front plate corresponds to the depth of the supported slab, while height h_2 of side plates corresponds to the depth of supporting slabs (Figure 4).

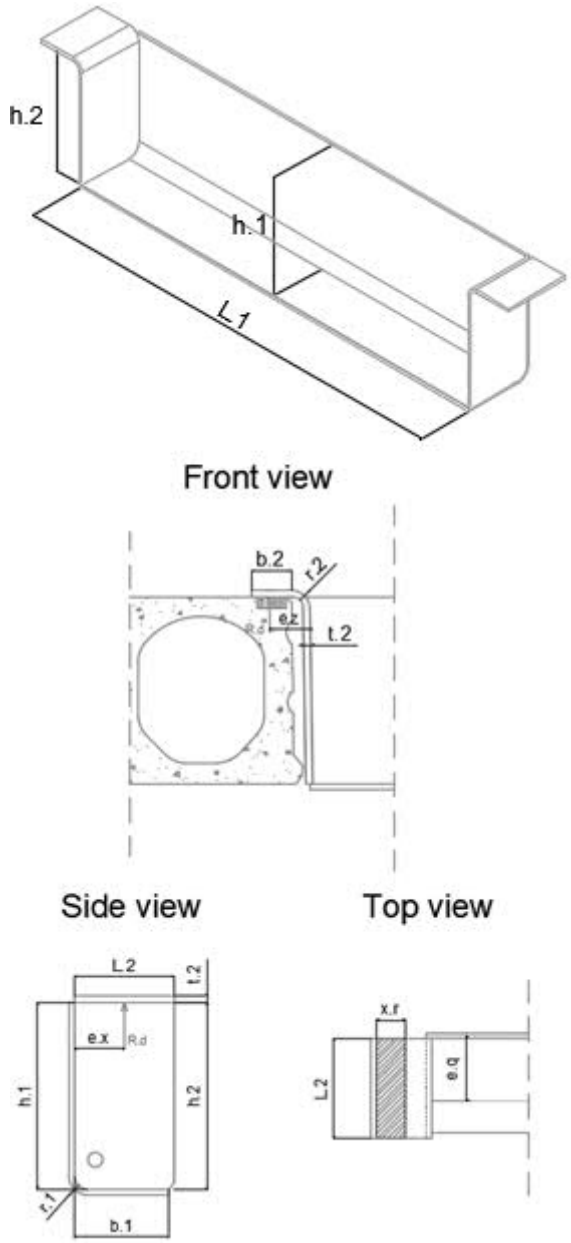

Figure 4. Principal dimensions of PETRA Slab Hanger

The standardized range of principal dimensions for structural parts, as well as geometry limitations are available at Peikko Group website.

Peikko Group Oy provides a certain PETRA model range, which defines the product's geometry and resistance based on the place of application. In

some special cases PETRA could have a complex geometry as shown in Figure 5.

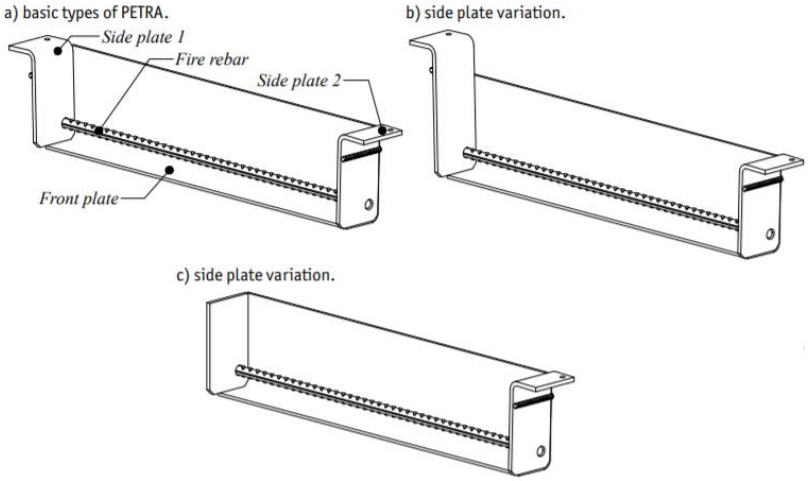

Figure 5. Examples of PETRA Slab Hangers (Peikko Group Oy 2016).

4.1 Effect of side plate geometry on PETRA's structural behavior

The resultant force of a support area under the side flange is located with a certain distance from the point of application of the load. That distance influences the total span length used in static analysis (Figure 6).

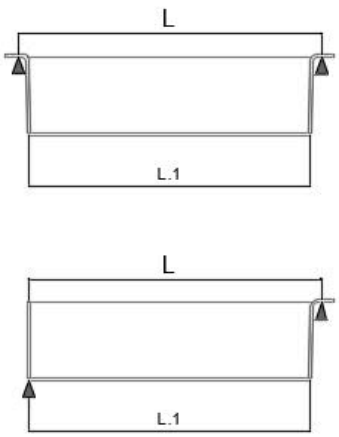

Figure 6. Effect of side plate variation on static model

The determination of distance L is described in Appendix 2.

5 STRUCTURAL ACTIONS

5.1 General

The structural actions on PETRA are classified according to EN 1990:

- Permanent actions (G)
  - the self-weight of structural elements (PETRA slab hanger, hollow core slab, grouting)
  - the self-weight of non-structural elements (concrete topping, floor covering, fixed partition elements etc.)
  - ring reinforcement

- Variable actions (Q)
  - imposed loads from buildings
  - snow load
  - loads from movable equipment

The different load cases should be combined into the most unfavourable load combination.

$$\gamma_G \cdot G + \gamma_Q \cdot Q \tag{1}$$

Where:
γ_G – is the partial safety factor for permanent loads (corresponding to factor $\gamma_{G\,j,sup}$ of Table A1.2 of EN 1990/NA – National Annex)
γ_Q – is the partial safety factor for imposed loads (corresponding to factor γ_{Q1} of Table A1.2 of EN 1990/NA – National Annex)

5.2 Load distribution

PETRA slab hanger is assumed to act as a simply supported beam element. Therefore, actions resulting from the self-weight of the supported slab (g_{HC}) and imposed loads (q_1, Δ_g) are modelled as equivalent linear or triangular reactions on the PETRA slab hanger.

During assembly, PETRA slab hanger is considered to be loaded only by the self-weight of the supported slab. The supported slab acts as a simply supported beam with PETRA as one of the supports. The load carried by PETRA is determined as follows:

$$g_{HC.r} := \frac{g_{HC} \cdot L_0}{2} \tag{2}$$

Where:
g_{HC} – is the self-weight of supported slab [*kN/m2*]
L_0 – is the length of supported slab

After the lateral joints are grouted and hardened, it is possible to consider transverse distribution of loads between hollow-core slabs. This type of analysis is allowed by Annex C of the European Standard for hollow-core slabs (EN 1168) under the condition that the horizontal displacements of the hollow-core floor are restricted by the following:

- Adjacent structural parts
- Friction in supports
- Friction in lateral joints
- Ring reinforcement
- Concrete topping with mesh reinforcement

If at least one of the aforementioned requirements is satisfied, it may be considered that PETRA carries only part of the surface load situated within a triangular area.

The effect of imposed surface load on PETRA slab hanger is represented as triangular load with maximum value at mid-span and calculated by the following formula:

$$q_{1k} := \frac{\sqrt{3} \cdot L_1 \cdot q_1}{2} \qquad \Delta_{g.k} := \frac{\sqrt{3} \cdot L_1 \cdot \Delta_g}{2} \tag{3}$$

Where:
q_1 – is a variable surface load [*kN/m2*]
Δ_g – is a permanent surface load [*kN/m2*]

If concrete topping is cast at the same time as the longitudinal joints between panels, the reaction from topping on the PETRA slab hanger will be determined in the same way as it is for the self-weight of the hollow core slab:

$$g_{top.R1} := \frac{g_{top} \cdot L_0}{2} \tag{4}$$

If concrete topping is cast after the joints between the hollow core slabs are hardened, the reaction on the PETRA slab hanger will be determined in the same way as it is for the imposed load:

$$g_{top.R2} := \frac{\sqrt{3} \cdot L_1 \cdot g_{top}}{2} \tag{5}$$

Where:
g_{top} – is the surface load from concrete topping [kN/m^2]

5.3 Load cases

The following load cases are considered:

- Surface loads:
  - Permanent loads: self-weight of supported slab (g_{HC}), self-weight of concrete topping (g_{top}), other permanent loads (Δ_g)
  - Imposed load (q_1)

- Linear loads:
  - Permanent loads: self-weight of PETRA slab hanger (g_{PETRA}), self-weight of the grouting (g_{grout}), self-weight of fixed partition wall (g.1)
  - Imposed loads: reaction from live load acting on partition wall (q2)

- Point loads:
  - Permanent loads: self-weight of supported column (G_{col})
  - Imposed load: reaction from live load acting on supported column (Q_3)

The following load combination must be considered for design of PETRA slab hanger acting simultaneously at normal use stage:

- Linear:

$$g_d + q_d := \left(g_{HC.r} + g_{petra} + g_{grout} + g_1 + g_{top.R1}\right) \cdot \gamma_G + q_2 \cdot \gamma_Q \tag{6}$$

- Triangular:

$$q_{1.d} := \left(\Delta_{g.k} + g_{top.R2}\right) \cdot \gamma_G + q_{1k} \cdot \gamma_Q \tag{7}$$

- Point:

$$P_d := G_{col} \cdot \gamma_G + Q_3 \cdot \gamma_Q \tag{8}$$

5.4 Response of PETRA on design actions

Previously described load combinations produce shear force and bending moment respective to the load type. The sum of reactions to each load type represents the value of total shear force and total bending moment respectively.

$$\sum V_{Ed} = V_{Ed.lin} + V_{Ed.tri} + V_{Ed.p} \tag{9}$$

$$\sum M_{x.Ed.i} = M_{x.Ed.lin.i} + M_{x.Ed.tri.i} + M_{x.Ed.p.i} \tag{10}$$

Static formulas used for the determination of the PETRA response on each load type are presented in Appendix 1.

6 CROSS-SECTIONAL PROPERTIES

To proceed with further analysis, the following cross-sectional properties of PETRA's front plate should be determined:

- Section centroid, neutral axis
- Second moment of area
- Product moment of area
- Torsional constant

The design calculation presented in Appendix 4 implies defining of cross-sectional properties according to Figure 7 below.

6.1 Section centroid, neutral axis

Defining a section centroid is a base of analysis. In order to obtain coordinates of the centroid of a complex body, the body is split into regular components, which represent common geometric shapes. After common shapes are defined, the arbitrary coordinate system should be set as a reference.

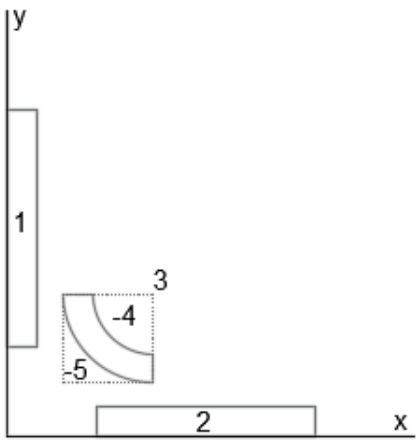

Figure 7. Components and reference coordinate system

When previous steps are fulfilled, the following general formulas should be applied in order to locate centroid of a section:

$$Y := \frac{\Sigma A_i \cdot y_i}{\Sigma A_i} \quad X := \frac{\Sigma A_i \cdot x_i}{\Sigma A_i} \tag{11}$$

Where:

A_i – is an area of a component
y_i and x_i – represent the distance from established reference coordinate system to the centroid of a component in y and x direction respectively
Y and X – locate the centroid of a section with respect to established coordinate system

6.2 Second moment of area

Second moment of area represents a measure of efficiency against bending, thus it should be obtained for further analysis.
Data from the previous subchapter allows to determine second moment of area of a section by applying parallel axis theorem:

$$I_Y := \Sigma\left(I_{yi} + A_i \cdot d_{xi}^2\right) \quad I_X := \Sigma\left(I_{xi} + A_i \cdot d_{yi}^2\right) \tag{12}$$

Where:
I_{yi} and I_{xi} – represent second moment of area relative to the centroid of the component
A_i – is an area of a component
d_{xi} and d_{yi} – is a distance from the respective centroidal axis of a component to the parallel centroidal axis of a section
I_Y and I_X – represent second moment of area relative to the centroid of the whole section

6.3 Product moment of area

Product moment of area represents a measure of symmetry of a section. Since PETRA slab hanger consists of unsymmetrical parts, such a value should be obtained, in order to proceed with further design.
Following the same principles described in subchapter 6.1, product moment of area should be obtained by:

$$I_{XY} := \Sigma\left(I_{xyi} + A_i \cdot d_{xi} d_{yi}\right) \tag{13}$$

Where:
I_{xyi} – is a product moment of area relative to the centroid of the component
A_i – is an area of a component
d_{xi} and d_{yi} – is a distance from the respective centroidal axis of a component to the parallel centroidal axis of a section
I_{XY} – represent product moment of area relative to the centroid of the whole section

6.4 Torsional constant

Torsional constant is used for the evaluation of torsional effect on a section.

Calculated and adapted based on the following general formula for thin walled open sections with uniform thickness:

$$J := \frac{1}{3} \cdot U \cdot t^3 \tag{14}$$

Where:
U – is a perimeter of median cross-section
t – is a thickness of a section

7 ANALYSIS

7.1 Side plate

The step-by-step analysis is provided in Appendix 2, section 1.

7.2 Front plate

7.2.1 General

The structural model used to represent the front plate – is a simply supported beam loaded by the reaction from supported slab.

The front plate has to withstand the following actions:

- Torsion
- Global bending
- Local bending

The combined effect of those actions is checked in critical points presented in the section 2.1 of Appendix 2. The state of stress in each point must comply with the following condition:

$$\sqrt{\sigma_{z.i}^2 + \sigma_{x.i}^2 - \sigma_{z.i}\sigma_{x.i} + 3 \cdot \tau_{xyt.i}^2} \le \frac{f_y}{\gamma_{M0}} \tag{15}$$

Where:
$\sigma_{z.i}$ – is the normal stress component due to global bending
$\sigma_{x.i}$ – is the normal stress component due to local bending
τ_{xyt} – is the shear stress component due to the torsional moment

7.2.2 Torsion

The detailed explanation of section behaviour in torsion is described in Annex 2, 2.2.

The torsional moment results in a shear stress as follows:

$$\tau_{xyt.i} := \frac{M_{t.Ed}}{I_{t.f}} \cdot t_1 \tag{16}$$

Where:
$M_{t.Ed}$ – is the torsional moment defined in Annex 2, Eq.17
t_1 – is the thickness of the front plate
$I_{t.f}$ – is the torsional constant

7.2.3 Global bending

In order to obtain normal stresses due to global bending, the general formula for bending of unsymmetrical sections is applied:

$$\sigma_{z.i} := -\frac{\sum M_{x.Ed.i} I_Y}{I_X \cdot I_Y - I_{XY}^2} \cdot y_i + \frac{\sum M_{x.Ed.i} I_{XY}}{I_X \cdot I_Y - I_{XY}^2} \cdot x_i \tag{17}$$

Where:
$\sigma_{z.i}$ – is the global bending stress at respective point
y_i and x_i – are the coordinates of the respective point in local coordinate system described in section 2.1 of Appendix 2
$M_{x.Ed.i}$ – is the total global bending moment at respective point defined in Appendix 1

7.2.4 Local bending

The detailed explanation of the section behaviour under local bending is described in Annex 2, 2.3.

The local bending results in compressive stress in respective critical points mentioned in Appendix 2, 2.1 with the following value:

$$\sigma_{x.i} := -\frac{6 \cdot m_{z.Ed.i}}{t_1^2} \tag{18}$$

Where:
$\sigma_{x.i}$ – is the local bending stress at respective point
$m_{z.Ed.i}$ – is a respective local bending moment defined in Appendix 2, 2.3

7.3 Welds

The step-by-step design procedure is described in Appendix 2, 2.4.

8 STRENGTHENING

8.1 Preface

In order to develop a strengthening solution for a product, an engineer should understand how the product behaves and what the weak points are. The governing limit states described in the previous chapter are:

- Failure of side plate flanges and compression failure of supporting slabs
- Welds failure
- Front plate failure

The side flange failure is a rare case, as well as compression resistance failure of the supporting slab. However, Peikko Group has a solution for that case: increased width of side flange L_2 benefits both side flange resistance and compression resistance of the slab by increasing loading spread.

The welds also have a solution in case of insufficient capacity. The resistance could be positively affected by increasing welds' effective length and throat thickness.

The front plate appears to be the only component of PETRA which had no standardized strengthening solution before. Thus, the whole chapter is concentrated on strengthening of the front plate.

8.2 Front plate's failure analysis

Based on the information mentioned in chapter 7.2 it is wise to highlight that, theoretically, there are three possible governing components that could result into failure:

- Stress due to global bending
- Stress due to local bending
- Stress due to torsion

The behavior of the front plate under global bending depends on its sectional properties, length and intensity of the load. That means that global bending stress is the governing component for long profiles and profiles with the minimum height.

However, local bending stress could rarely be the governing component, it is likely to occur with short profiles having high global bending resistance. Other than that, the profile must be heavily loaded in order to fail.

The torsional stress cannot be the governing component. Its impact is described in Appendix 2, 2.2.

In practice, most of the studied cases show that failure occurs in the middle of the section due to the global bending stress component.

8.3 Solution

The ideation based on the failure mode analysis resulted into a certain concept, which later became a solution. Global bending stiffness appeared to be the most reasonable field to improve. It was decided to develop such a strengthening solution which could contribute to product's resistance and at the same time not to interfere with its functioning.

The solution is presented in Figure 8 below:

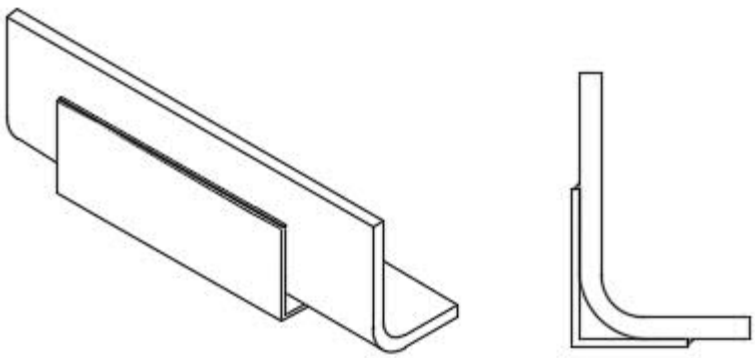

Figure 8. Strengthened front plate, side view

It is a standard L-profile welded to the back of the front plate. This type of solution allows to contribute to global bending stiffness considerably by increasing the relevant second moment of area.

The principal dimensions for the additional L profile are denoted as shown in Figure 9:

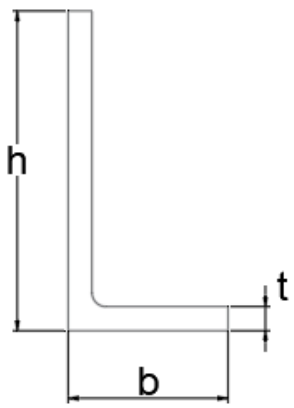

Figure 9. Principal dimensions of additional L profile

In order to make it possible to join front plate with a strengthening component, the limiting value of h and b were developed as follows:

$$r_1 + t_1 \leq h - t \leq h_1 + t_1 \quad (19)$$

$$r_1 + t_1 \leq b - t \leq b_1 + t_1 \quad (20)$$

Which mean that web and flange of additional L profile must cover sufficient space to be welded to the front plate; however, it should not take more space than the product itself.

8.4 Alternative solutions

Although the main goal is to introduce a global bending stiffening solution, it is possible to use the same strengthening component also for local bending strengthening by means of welding.

The first alternative option is to consider the flange of additional L-profile to be partially active against local bending. Thus, assuming its contribution to the stiffness against local bending, another weld, effective against developed stress, must be added.

The first alternative solution is presented in Figure 10 below:

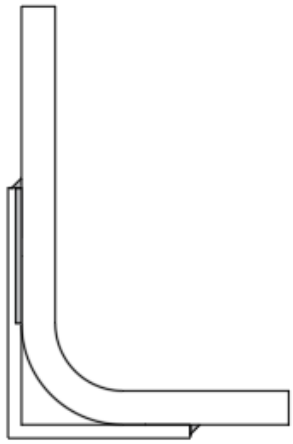

Figure 10. Alternative solution №1

Another alternative solution is to imply a unity of additional L-profile with the flange of the front plate. The additional weld between flanges must be added in order to treat flanges as a solid section. As those welds are required, the additional profiles must be set in series along PETRA length contributing to the local bending resistance a great deal, but not being as effective against global bending as previous solutions.

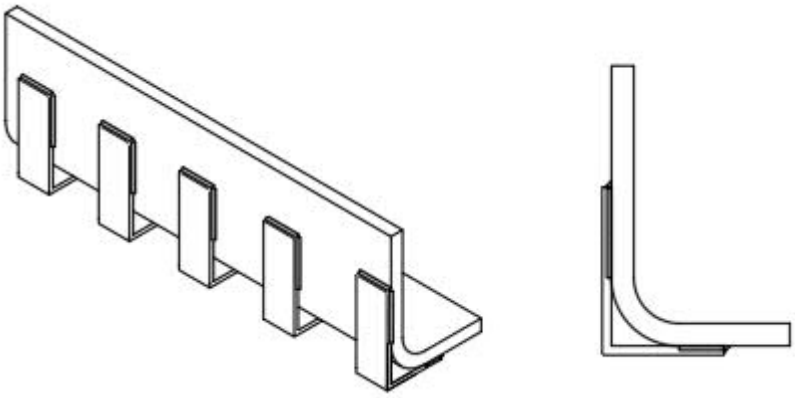

Figure 11. Alternative solution №2

8.5 Strategy

In order to strengthen the section, first, the critical points described in chapter 7.2.1 should be determined. In case of failure, the resultant state of stress of the critical point must be resolved into components and the governing component must be chosen by visual inspection.

As previously mentioned, the failure is likely to occur at the middle of the section due to the global bending stress component. The strengthening is then done by increasing global bending stiffness of the system withing the range where it is needed in order to satisfy the requirement set in Eq.15.

However, in some rare cases, where local bending stress component might seem to be dominant, this strategy is still applicable. The additional L-profile's ledge is also meant to contribute to the stiffness of the system against local bending stress.

If the absolute value of the compressive stress due to local bending moment is clearly dominant, then more precise analysis is needed. Since it is the rarest case to happen, it is not covered within this thesis.

8.6 Design of strengthening component

The design procedure starts with the determination of minimum length of additional L profile required to cover the global bending failure.
The computing power of Mathcad 15 allows to find a certain state of global bending stress which will satisfy the condition presented in Eq. 15:

$$\sigma_{z.p1} := \frac{f_y}{\gamma_{M0}} = \sqrt{\sigma_{z.p1}^2 + \sigma_{x.1}^2 - \sigma_{z.p1}\cdot\sigma_{x.1} + 3\cdot\tau_{xyt.1}^2} \text{ solve}, \sigma_{z.p1} \rightarrow$$

$$\sigma_{z.p1.t} := \max(\sigma_{z.p1}) \tag{21}$$

Using the general formula for bending of unsymmetrical sections presented in Eq. 17, it is possible to obtain a moment which produces aforementioned stress in the section:

$$\text{Given} \quad M := 1kNm$$

$$\sigma_{z.p1.t} = \frac{-M\cdot I_{Y.f}}{I_{X.f}\cdot I_{Y.f} - I_{XY.f}^2}\cdot y_1 + \frac{M\cdot I_{XY.f}}{I_{X.f}\cdot I_{Y.f} - I_{XY.f}^2}\cdot x_1 \tag{22}$$

$$M_{yield} := \text{Find}(M)$$

Then, by using static equations presented in Appendix 3, section 1 it is possible to determine such points x_{p1} and x_{p2} along the front plate length where the sum of moments produced by each load type result into previously defined M_{yield}.

Thus, a minimum length of additional L profile is calculated as follows:

$$L_{p.z.min} := x_{p2} - x_{p1} \tag{23}$$

In order to determine the minimum required height h of additional L profile, which will contribute the most to the global bending stiffness, the state of stress in front web should be analysed. The following equation allows to determine the minimum global bending stress component

required to satisfy the condition presented in Eq. 15 in the middle of the section:

$$\text{Give}$$

$$\sigma_{z.h1} := 1\frac{N}{mm^2}$$

$$\sqrt{\sigma_{z.h1}^2 + \sigma_{x.i}^2 - \sigma_{z.h1}\cdot\sigma_{x.i} + 3\cdot\tau_{xyt.i}^2} = \frac{f_y}{\gamma_{M0}} \tag{24}$$

$$\sigma_{z.h.max} := \text{Find}(\sigma_{z.h1})$$

The obtained value represents a state of normal stress at a certain location. Thus, using the general formula for bending of unsymmetrical sections Eq. 41, it is possible to locate a point where the state of global bending stress is equal to $\sigma_{z.h.max}$.

The following equation is used to determine vertical coordinate of a point located at the back face of the front web which will consist of previously described stress:

$$\text{Give}$$

$$y_{11} := 1mm$$

$$\frac{-M_{x.Ed.i}I_Y}{I_X\cdot I_Y - I_{XY}^2}\cdot y_{11} + \frac{M_{x.Ed.i}I_{XY}}{I_X\cdot I_Y - I_{XY}^2}\cdot -X_f = \sigma_{z.h.max} \tag{25}$$

$$y := \text{Find}(y_{11})$$

Where:

X_f – is a horizontal distance from centroid of section to the back face of front web, which coincides with a location of reference coordinate system illustrated in Figure 2 of Appendix 2

y – is a sought vertical coordinate

The obtained vertical coordinate allows to determine the minimum recommended height of the additional L profile which is defined as follows:

$$h_{min} := Y_f + y \tag{26}$$

The determination of minimum width b of additional L-profile is based on the idea that state of stress in front flange must satisfy the same requirement presented in Eq.15, where global bending stress component $\sigma_{z.b.max}$ and local bending stress component $\sigma_{x.b.max}$ are slightly modified:

$$\sigma_{z.b.max} := \frac{-M_{x.Ed.i}I_Y}{I_X\cdot I_Y - I_{XY}^2}\cdot -Y_f + \frac{M_{x.Ed.i}I_{XY}}{I_X\cdot I_Y - I_{XY}^2}\cdot(-X_f + x_{11}) \tag{27}$$

$$\sigma_{x.b.max} := -\frac{6 \cdot m_{z.Ed.1} \cdot (e_{m.ref} - x_{11})}{t_1^2 \cdot e_m} \tag{28}$$

Where:

Y_f – is a vertical distance from centroid of section to the lower face of front flange, which coincides with a location of reference coordinate system illustrated in Figure 2 of Appendix 2

x_{11} – is a certain unknown horizontal coordinate along lower face of front flange

$e_{m.ref}$ – is a reference eccentricity which is defined in Appendix 3, section 1

e_m – is the initial eccentricity described in Appendix 2, 2.3, Eq. 20

The following equation allows to determine such a point x, where front plate's ledge is able to resist the combination of stresses:

Given

$$x_{11} := 0mm$$

$$\sqrt{\sigma_{z.b.max}^2 + \sigma_{x.b.max}^2 - \sigma_{z.b.max} \cdot \sigma_{x.b.max} + 3 \cdot \tau_{xyt.i}^2} = \frac{f_y}{\gamma_{M0}} \tag{29}$$

$$x := \text{Find}(x_{11})$$

Thus, the minimum recommended width b of additional L-profile is calculated as follows:

$$b_{min} := x + t \tag{30}$$

Though the minimum recommended values for the strengthening of the section are obtained, these do not necessarily have to coincide with the dimensions of the additional L-profile. The obtained values are used as a general reference for the choice of the strengthening component, which is likely to have different web height and flange width, because of certain standardized geometry range. Therefore, limiting values for the choice of L-profile accounting geometry-based limit described in 8.3 are modified as follows:

$$\max(r_1 + t_1, Y_f + y) \le h - t \le h_1 + t_1 \tag{31}$$

$$\max(r_1 + t_1, x + t) \le b - t \le b_1 + t_1 \tag{32}$$

8.7 **Analysis of strengthened section**

8.7.1 General

Further analysis procedure is based on the same principles described within chapters 5-7 accounting additional L-profile in section properties.

The design calculation presented in Appendix 4 implies defining of cross-sectional properties of a strengthened section according to Figure 12.

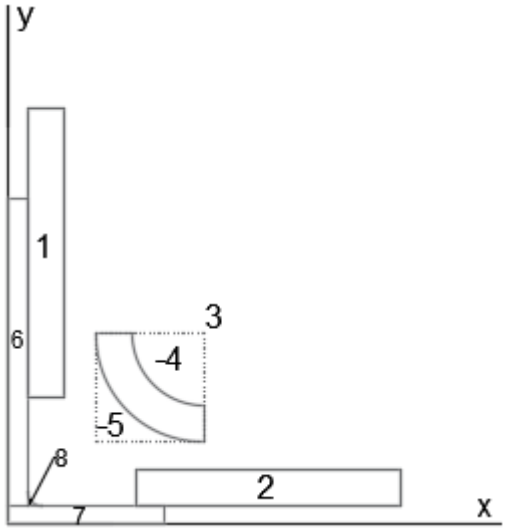

Figure 12. Strengthened section components and reference coordinate system

The state of stress, complying with Eq. 15, is then checked in critical points described in Appendix 3, section 2 and additional points illustrated in Figure 13 below:

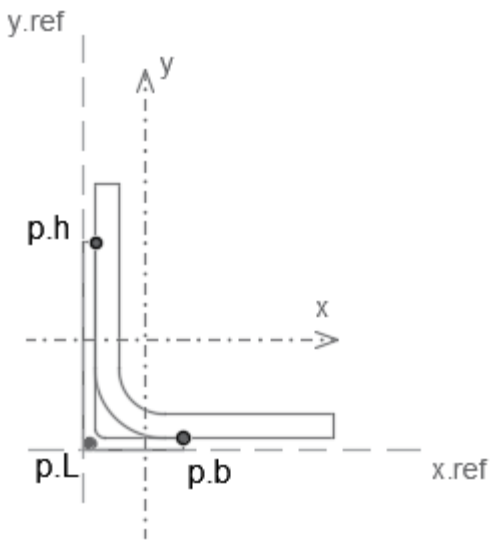

Figure 13. Additional examination points after strengthening

Where global and local bending stresses are defined according to principles described in 7.2.3 – 7.2.4 respectively.

8.7.2 Welds

The welds used to connect additional L profile to the front plate are designed to withstand maximum global bending stress developed in a strengthened section.

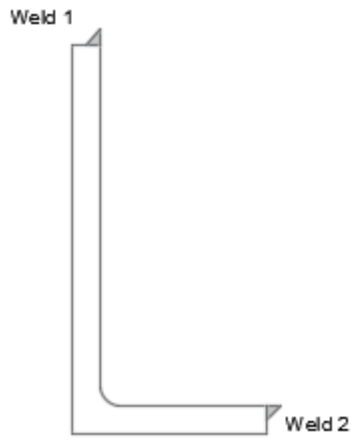

Figure 14. Weld numbering

In order to define the force, which the weld should resist, the state of global bending stress should be defined for the points below (Figure 15).

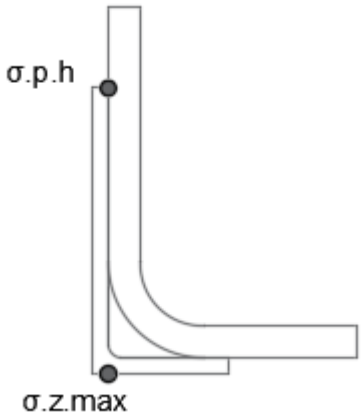

Figure 15. Points for the state of stress check in strengthened section

Where stresses are obtained by applying a general formula for bending of asymmetrical sections presented in Eq. 17 accounting for the maximum global bending moment defined in Eq. 10 and the following coordinates:

$$x_{p.h} := -X_{f.str} + t$$
$$y_{p.h} := -Y_{f.str} + h$$
$$x_{z.max} := -X_{f.str} + t \qquad (33)$$
$$y_{z.max} := -Y_{f.str}$$

Where:
$X_{f.str}$ and $Y_{f.str}$ – are the horizontal and vertical coordinates of strengthened section obtained by applying principles described in 6.1

Since the additional L-profile might end up covering both compressive and tensile zone, the resultant forces from the global bending stresses are obtained differently for each case.

When L profile is subjected to tensile stresses, the resultant force is obtained as follows:

$$F_{r.T} := \left(\sigma_{z.p.h} + \frac{\sigma_{z.max} - \sigma_{z.p.h}}{2}\right) \cdot \sum A_L \qquad (34)$$

Where:
A_L – is an area of the additional L profile

When L profile is in compressive and tensile area, two resultant forces are taken into account:

$$F_c := \frac{\sigma_{z.p.h} \cdot y_{p.h}}{2} \cdot t \qquad (35)$$

$$F_t := \frac{\sigma_{z.max}}{2} \cdot \left(\sum A_L - y_{p.h} \cdot t\right) \qquad (36)$$

Where:
F_c – is a resultant force obtained from compressive stresses
F_t – is a resultant force obtained from tensile stresses

In order to proceed with further analysis, the resultant forces must be located within the height of the web of additional L-profile. The following formulas represent distances from the upper surface of additional L-profile's web to the respective resultant force:

$$d := \frac{3 \cdot F_{p.h} \cdot h + F_{p.max} \cdot h \cdot 4}{6 \cdot F_{r.T}} \qquad (37)$$

$$d_c := \frac{y_{p.h}}{3} \qquad (38)$$

$$d_t := \frac{2 \cdot Y_{f.str}}{3} + y_{p.h} \qquad (39)$$

Where:
d – is distance to force $F_{r.T}$
d_c – is distance to force F_c
d_t – is distance to force F_t

Aforementioned distances are used to define eccentricities of the forces to the vertical and horizontal projections of centroid of welds:

$$e_1 := d - 0.5\cdot(h - t) \tag{40}$$

$$e_{1.c} := 0.5\cdot(h - t) - d_c \tag{41}$$

$$e_{1.t} := d_t - 0.5\cdot(h - t) \tag{42}$$

$$e_2 := 0.5b \tag{43}$$

Thus, forces acting in welds are defined as follows:

$$F_{w.1.T} := F_T - \frac{F_T\cdot e_1}{h - t} + \frac{F_T\cdot e_2}{b - t} \tag{44}$$

$$F_{w.1.c.t} := F_c + F_t + \frac{F_c\cdot e_{1.c}}{h - t} + \frac{F_c\cdot e_2}{b - t} - \frac{F_t\cdot e_{1.t}}{h - t} + \frac{F_t\cdot e_2}{b - t} \tag{45}$$

$$F_{w.2.T} := F_T + \frac{F_T\cdot e_1}{h - t} - \frac{F_T\cdot e_2}{b - t} \tag{46}$$

$$F_{w.2.c.t} := F_c + F_t - \frac{F_c\cdot e_{1.c}}{h - t} - \frac{F_c\cdot e_2}{b - t} + \frac{F_t\cdot e_{1.t}}{h - t} - \frac{F_t\cdot e_2}{b - t} \tag{47}$$

The proper resultant normal stresses for each weld is chosen upon the condition presented in the following formulas:

$$\sigma_{w.1} := \begin{cases} \sqrt{3\cdot\left(\frac{F_{w.1.T}}{A_{w.L}}\right)^2} & \text{if } \sigma_{z.p.h} \geq 0 \\ \sqrt{3\cdot\left(\frac{F_{w.1.c.t}}{A_{w.L}}\right)^2} & \text{otherwise} \end{cases} \tag{48}$$

$$\sigma_{w.2} := \begin{cases} \sqrt{3\cdot\left(\frac{F_{w.2.T}}{A_{w.L}}\right)^2} & \text{if } \sigma_{z.p.h} \geq 0 \\ \sqrt{3\cdot\left(\frac{F_{w.2.c.t}}{A_{w.L}}\right)^2} & \text{otherwise} \end{cases} \tag{49}$$

Where:
$\sigma_{w.1}$ and $\sigma_{w.2}$ – are the resultant normal stresses at Weld 1 and Weld 2 illustrated in Fig. 14

The area of the weld is defined as follows:

$$A_{w.L} := a_{w.L} \cdot L_{p.z.min} \tag{50}$$

The resultant normal stresses should satisfy the following requirement:

$$\sigma_{w.1}, \sigma_{w.2} \le \frac{f_{u.L}}{\beta_w} \cdot \gamma_{M2} \tag{51}$$

When the optimal value for the throat thickness is defined, it is possible to obtain the additional length for the strengthening component which is required to activate the weld. The design procedure implies defining resultant forces for each weld (Eq. 44-Eq. 47) complying with the principles defined within that chapter, accounting different state of global bending stress due to M_{yield} (defined in Eq. 22) at points illustrated in Fig. 15.

$$L_{add.w1.T} := \frac{\sqrt{3} \cdot F_{w.1.T.y} \cdot \beta_w \cdot \gamma_{M2}}{a_{w.L} \cdot f_{u.L}} \tag{52}$$

$$L_{add.w1.t.c} := \frac{\sqrt{3} \cdot F_{w.1.t.c.y} \cdot \beta_w \cdot \gamma_{M2}}{a_{w.L} \cdot f_{u.L}} \tag{53}$$

$$L_{add.w2.T} := \frac{\sqrt{3} \cdot F_{w.2.T.y} \cdot \beta_w \cdot \gamma_{M2}}{a_{w.L} \cdot f_{u.L}} \tag{54}$$

$$L_{add.w2.t.c} := \frac{\sqrt{3} \cdot F_{w.2.t.c.y} \cdot \beta_w \cdot \gamma_{M2}}{a_{w.L} \cdot f_{u.L}} \tag{55}$$

The additional length for each weld is defined accounting for condition set in the following formulas:

$$L_{add.w1} := \mathrm{if}\left(\sigma_{z.p.h.y} \ge 0, L_{add.w1.T}, L_{add.w1.t.c}\right) \tag{56}$$

$$L_{add.w2} := \mathrm{if}\left(\sigma_{z.p.h.y} \ge 0, L_{add.w2.T}, L_{add.w2.t.c}\right) \tag{57}$$

Thus, the total length of the strengthening component is defined as follows:

$$L_{z.tot} := L_{p.z.min} + 2 \max\left(L_{add.w1}, L_{add.w2}\right) \tag{58}$$

8.7.3 Additional points

The stress state in additional points is checked to comply with the condition set in Eq. 15. More detailed design procedure is described in Appendix 3, section 2.

Point p.h is located at the place of contact between additional L profile and back face of front web. It consists of normal stress $\sigma_{z.p.h}$ due to the global bending moment.

Point p.b is located at the place of contact between additional L profile and back face of front flange. It consists of normal stress $\sigma_{z.p.b}$ due to global bending and compressive stress $\sigma_{x.p.b}$ due to local bending.

Local bending stress is obtained as follows:

$$\sigma_{x.b} := -\frac{6 \cdot m_{z.Ed.1} \cdot e_{m.b}}{t_1^{\,2} \cdot e_m} \tag{59}$$

Where:
$e_{m.b}$ – is a an eccentricity defined in Appendix 3, section 2, Eq. 8

Point L is located at the intersection of the median lines of additional L-profile's web and flange. It consists of normal stresses from global and local bending.

9 CONCLUSION

As a result of the thesis a solution for strengthening PETRA Slab Hanger was produced for Peikko Group. The developed design calculation allows to define recommended values of strengthening component as well as to define section resistance with additional strengthening profile of arbitrary dimensions.

REFERENCES

Bujnak, J. & Matiasko, S. (2015) *PETRA Slab Hanger Structural design.* Internal design handbook, Peikko Group

Lemonis, M.E. (2019). Moments of Inertia – Reference Table
Retrieved 5 November 2020 from
https://calcresource.com/moments-of-inertia-table.html#anchor-16

Peikko Group Oy. (2016). Examples of PETRA Slab Hangers.
Retrieved 15 January 2020 from
https://d76yt12idvq5b.cloudfront.net/file/dl/i/TTEgOw/sQ2Vx5Go0yIM5XDym7aYlQ/PETRAPeikkoGroup003TMAWeb.pdf

Peikko Group Oy. (2016). PETRA Slab Hanger, Technical manual.
Retrieved 5 November 2019 from
https://d76yt12idvq5b.cloudfront.net/file/dl/i/TTEgOw/sQ2Vx5Go0yIM5XDym7aYlQ/PETRAPeikkoGroup003TMAWeb.pdf

Peikko Group Oy. (2016). Typical layout of hollow-core floor with PETRA.
Retrieved 15 January 2020 from
https://d76yt12idvq5b.cloudfront.net/file/dl/i/TTEgOw/sQ2Vx5Go0yIM5XDym7aYlQ/PETRAPeikkoGroup003TMAWeb.pdf

Peikko Group Oy. (n.d). PETRA Slab Hanger.
Retrieved 15 January 2020 from
https://www.peikko.com/products/product/petra-slab-hanger/

SFS-EN 1168 Precast concrete products. Hollow core slabs. SFS Online.
Retrieved 5 November 2019 from
https://online.sfs.fi

SFS-EN 1990 Eurocode (2002, 2006). Basis of structural design. SFS Online.
Retrieved 5 November 2019 from
https://online.sfs.fi

SFS-EN 1991-1-1 Eurocode (2002). Actions on structures. Part 1-1: General actions. Densities, self-weight, imposed loads for buildings. SFS Online.
Retrieved 5 November 2019 from
https://online.sfs.fi

SFS-EN 1992-1-1 Eurocode (2005). Design of concrete structures. Part 1-1: General rules and rules for buildings. SFS Online.
Retrieved 5 November 2019 from
https://online.sfs.fi

SFS-EN 1993-1-1 Eurocode (2005). Design of steel structures. Part 1-1: General rules and rules for buildings. SFS Online.
Retrieved 5 November 2019 from
https://online.sfs.fi

SFS-EN 1993-1-8 Eurocode (2005). Design of steel structures. Part 1-8: Design of joints. SFS Online.
Retrieved 5 November 2019 from
https://online.sfs.fi

Tirteu, C. (2018) Statics and strength of materials. Lecture notes 2018, Häme University of Applied Sciences.