Tampereen ammattikorkeakoulu

Use of a Collaborative Robot in the Feeding Process of a Hobbing Machine

Case Study: Tasowheel Gears Oy

Daniela Balog

Bachelor's Thesis
April 2020

Mechanical Engineering
Product Development

ABSTRACT

Tampereen ammattikorkeakoulu
Tampere University of Applied Sciences
Degree Programme in Mechanical Engineering
Product Development

BALOG, DANIELA:
Use of a Collaborative Robot in the Feeding Process of a Hobbing Machine
Case study: Tasowheel Gears Oy

Bachelor's thesis 72 pages, appendices 5 pages
April 2020

This thesis was assigned by Tasowheel Gears Oy, that considers investing in a collaborative robot. The feeding process at the hobbing workstation is handled by an operator. Usually, the operator has two machines he must attend to at the same time. Therefore, there are many moments when parts must be fed into the hobbing machine chain conveyor, but the operator is not there to do this task. These waiting moments Tasowheel wants to cast aside.

The purpose of this thesis was to analyse and determine whether a collaborative robot deployment at a hobbing machine is the best solution to have a more efficient workstation by eliminating those waiting times. With a diverse list of nine parts being manufactured by the hobbing machine, this thesis investigated how easy or difficult it is to put such a change into practice, how the workflow unfolds when only a robotic arm handles the feeding process, and what risks and benefits there are.

There is a broad collection of cobot-related literature, and it is growing each day, but cobot's predecessor – the industrial robot – remains the base when this analysis was conducted. The similarities between these two types of robotic arm were compared and harvested in this paper. The ISO standards regarding robots and robotic devices helped in understanding what is required when shifting from a human workforce to a robotized one. All this data was used, together with information provided by the workstation responsible.

The results are conclusive: cobot deployment at a hobbing machine is a solution that can prevent time-wasting. It can replace the machine's operator and can handle the whole process independently, with few risks. For one product only, the deployment, as it was defined in this thesis, cannot happen. Nevertheless, there are elements that slow down the reaping of the benefits brought by this change, and a detailed discussion on them is provided here as well.

Next, a market study must be carried out to assess which cobot model would be the best choice. Addressing the issues that have emerged regarding insufficient payload, the gripper model and related risks will help in finding the most suitable cobot type. Furthermore, some improvement ideas are elaborated for the arrangements of parts in pallets.

Keywords: collaborative robot, cobot, pick and place, workflow

TIIVISTELMÄ

Tampereen ammattikorkeakoulu
Konetekniikka
Tuotekehitys

BALOG, DANIELA:
Yhteistyörobotin käyttö hammastuskoneen panostusprosessissa
Case study: Tasowheel Gears Oy

Opinnäytetyö 72 sivua, joista liitteitä 5 sivua
Huhtikuu 2020

Työn tilaaja, Tasowheel Gears Oy, harkitsee yhteistyörobotin hankkimista hammastuskoneelle. On tullut ilmi, että hammastuskoneella tehokkuutta voidaan parantaa lyhentämällä koneen odotusaikaa. Pitkät odotusajat johtuvat siitä, kun makasiiniin pitäisi laittaa työkappaleita työstettäväksi, ja tehtävää suorittava työntekijä työskentelee toisella työpisteellä. Tasowheel haluaa selvittää tämän opinnäytetyön kautta, olisiko yhteistyörobotin käyttöönotto hyvä ratkaisu kyseiseen ajankäyttöongelmaan ajankäyttöongelmaan hammastuskoneella.

Tämän opinnäytetyön tarkoitus oli analysoida yhteityörobotin soveltumista ratkaisuksi ajankäyttöongelmaan siirtämällä työkierron hoitamisen koneenkäyttäjältä yhteistyörobotille. Tavoitteena oli myös parantaa loppukappaleiden laatua vähentämällä pintavirheitä ja väärien mittojen syntymistä. Teollisuuden ja yhteistyörobotin materiaalit, kuten standardit ja markkinatutkimukset, olivat hyvä perusta tuotannon prosessia käsittelevään teoriaosuuteen. Tutkimusongelmana opinnäytetyössä oli se, että tutkimusta voitiin tehdä vain teorian pohjalta, koska käytössä ei ollut yhteistyörobottia, jolla olisi voinut suorittaa testejä.

Saatujen tuloksien perusteella yhteistyörobotin käyttöönotto onnistuu. Yhdeksän eri tuotteen työkierron analyysin avulla selvitettiin, että yhteistyörobotti pystyy hoitamaan makasiinin panostusprosessia, sekä työpisteen muita sivutehtäviä, kuten työkappaleen puhdistamista lastuista ja kappaleiden asettamista valutuskaukalolle. Tuli myös esille, että muutoksia on tehtävä sekä työpisteessä että työkierrossa. Analyysissä käytettiin yhtä yhteistyörobottimallia, joka tuloksien perusteella soveltuu kahdeksan tuotteen siirtelyyn. Yhden tuotteen siirtelyyn kyseinen robottimalli ei sovellu.

Tämän opinnäytetyön jälkeen Tasowheel voi jatkaa yhteistyörobotin hankkimisprosessia markkina-analyysillä selvittäen, minkälainen yhteistyörobottimalli sopii parhaiten. Tutkimustulosten lisäksi tuli esille pari kehittämiskohtaa liittyen yhteistyörobotin käyttöönottoon työpisteellä. Esimerkiksi tuotteen asettamistyyli palettiin vaihtelee, mikä vaikeuttaa yhteistyörobotin toimintaa.

Asiasanat: yhteistyörobotti, automatisointi, työkierto

CONTENTS

1 INTRODUCTION 6
2 TASOWHEEL GEARS OY 8
3 MANUFACTURING PROCESS 10
3.1 Gear hobbing 10
3.2 Liebherr LC300 11
3.3 Workstation 13
4 COLLABORATIVE ROBOTS 15
4.1 General info 15
4.1.1 Cobots, a small history 17
4.1.2 Products on the market 19
4.1.3 Terms and definitions 23
4.2 UR10e – cobot model 23
4.3 Accessories 24
4.3.1 Machine vision 25
4.3.2 Grippers 25
4.3.3 Force copilot and force sensor 27
4.4 Safety 28
5 PROBLEM DEFINITION 30
5.1 Initial situation 30
5.2 Need identification 32
5.3 General requirements 32
5.4 Preset assumptions 33
5.5 Pick and place 34
5.6 Methods and materials 35
6 WORKFLOW ANALYSIS 37
6.1 Analysis premises 37
6.1.1 Possible liabilities 39
6.1.2 Cobot position at the workstation 39
6.1.3 Part list 40
6.1.4 Gripper model 42
6.1.5 Analysis structure 43
6.2 Shafts 45
6.2.1 First, second and third parts 45
6.2.2 Fourth part 50
6.2.3 Fifth part 52
6.3 Gears 54

6.3.1 Sixth and seventh part 55
6.3.2 Eighth and ninth part 58
7 CONCLUSIONS 62
REFERENCES 65
APPENDICES 68
Appendix 1. Liebherr LC300 Technical Data (Liebherr brochure - modified. n.d., 5) 68
Appendix 2. Cobot Comparison Charts 69
Appendix 3. UR10e – Technical details (Meet the e-Series Family 2020) 71
Appendix 4. Robotiq 2F-85 specifications (Adaptive robot gripper… 2016, 105) 72

1 INTRODUCTION

Automation is the keyword for a sustainable future and a more efficient production plant. When talking about small and medium-sized manufacturers (SMM), industrial robots are an asset that can secure parts of the production. In cases of simple and repetitive tasks, an industrial robot is the perfect “employee” – it can work around the clock faster, better and with lower labour costs. Hence, tasks like inspection, machine tending, pick and place, material handling, welding, grinding, assembly, sorting, packaging, palletizing, screw driving, testing, or any combination of the above mentioned are becoming more and more effortless to perform. In the case of a hobbing machine, the feeding process is a combination of pick-an-place and machine tending. Specifically, this combination is the case for the present thesis, where the deployment of a collaborative robot is analysed for nine different products, like gears and shafts of different dimensions.

At the gear hobbing machine, the operator has practical tasks only in the beginning (starting the machining procedure) and during the chain conveyor feeding process. Depending on how long it takes for a piece to be ready, the waiting breaks for the operator can range from half-hour to one and a half. Usually, the operator has two machines to attend during his work shift. It is thus a typical situation where a robot can achieve a much efficient workstation.

Possible solutions on the market are a typical industrial robot and a collaborative robot. Between these two, the latest is more useful for this particular situation. There are a few reasons why a collaborative robot, and not an industrial robot: current workstation setting (not enough space for an industrial robot), greater flexibility, the possibility to transfer the cobot (how it started to be called lately) at a different workstation. There are, though, also disadvantages when choosing a cobot, and this thesis brings them upfront for all the nine products, individually.

For Tasowheel to understand if a cobot would be the right investment for them, they turned towards Tampere University. After talks with teachers from the university, the decision to split the whole analysis into three was made. The first team, from the Tampere University of Applied Sciences, was responsible for the safety guidelines analysis. The second team: Olli Mäkinen, Ossi Perä, Jussi Pienisaari, Eetu Piki, and Tomi Porras, from Tampere University, was responsible for investigating how to program the robot, so it fits comfortably to the needed applications, considering the setting of the workstation. Another part of their project was to define a solution for docking at different workstations. Furthermore, the third project, the present thesis, studies the exact workflow for a group of nine different products that are manufactured at the hobbing machine. In the research phase of this paperwork, there had been a collaboration with the team from Tampere University. This way, all the premises secured the best solution.

2 TASOWHEEL GEARS OY

Established in 1979 by Taisto Sorjonen in Tampere, Tasowheel Group Oy manufactures mostly power transmission components and assemblies. Over the years, Tasowheel has grown from a local gear wheel manufacturer to an internationally operating multi-industry group. Nowadays, under Tasowheel Group Oy enterprise, there are three manufacturing companies: Tasowheel Gears, Tasowheel Systems, and Tasowheel Tikka with plants in Tampere and Tikkakoski.

Despite the rapid growth and internationally oriented policy, with over 90% export, Thasowheel has remained a family-owned company, with the third generation currently working in the house. Thanks to the constant improvement and investment in both people and the latest machine technology, they can ship the best solutions, always with sustainability and environment-consciousness in mind. The city of Tampere awarded in 2002 and 2005 to Tasowheel Oy ISO 14001 certificate for environmental management. Through a wide variety and up-to-date machine fleet (see table 1), they can meet the required quality. (Tasowheel Group Oy 2018)

TABLE 1. Tasowheel Machine fleet (Tasowheel.fi 2018)

Machine type	Quantity
Turning	32
Milling	20
Grinding	23
Gear hobbing	14
Gear shaping	4
Gear grinding	4
Worm grinding	1
Inspection	8

Tasowheel Gear Oy is producing, designing, and developing transmission components. They provide high-quality gears, shafts, which are essential for any

high-class power transmission assembly. The production itself is semi-automated to assure the best quality of the products. Tasowheel Gears Oy supplies one of the most severe and exact industries: automotive. The products must correspond to the drawing, where no mistake is accepted, and a certificate guarantees the demanded quality. (Tasowheel Gears Oy 2018)

The Tasowheel Gears facility is 6000 m^2, with all the needed equipment. Turning and milling machines, gear hobbing and shaping, hard turning and grinding, gear grinding, quality control equipment or assembly, everything can be produced there.

The achieved high standard is maintained with the best tools available: Advanced Product Quality Planning (APQP), Failure Modes and Effects Analysis (FMEA), Control Plan and Production Part Approval Process (PPAP). (Tasowheel Gears Oy 2018)

3 MANUFACTURING PROCESS

3.1 Gear hobbing

The subject of the present thesis deals with the gear hobbing process. In a power transmission assembly, gears are the main component. High quality and proper working gear assembly require a perfectly cut gear. Hobbing is the primarily used process to manufacture high precision cuts. The process itself consists of two skew spindles: one where the workpiece is fixed and the other with the cutting tool, a hob. A small model of a hob can be seen in picture 1. A hob is a cylindrical screw interrupted by chip flutes, which bring about the gash (Klocke 2011, 406).

PICTURE 1. Gear cutter (Module Gear Cutter Hobbing Tools n.d.)

The technological process is relatively straightforward. The hob rotates and carves into the blank workpiece, the gaps between the teeth. The hob's teeth profile is the negative matching shape of the final workpiece's teeth. There are a series of rotating and translation motions for the hob to finish cut the workpiece. The next picture depicts how the process unfolds.

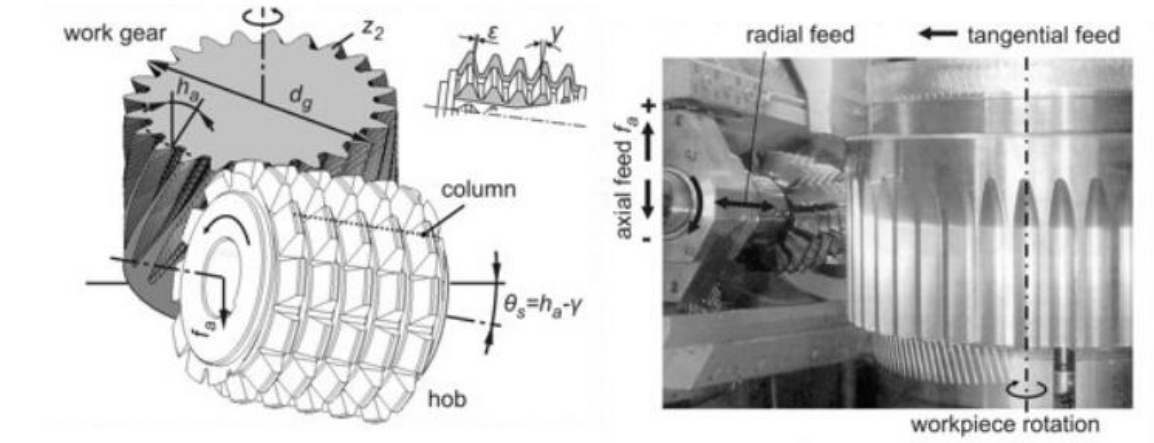

PICTURE 2. Kinematics of hobbing (Vasilis n.d.)

The angle between the spindles varies according to the to-be-manufactured gear. Types of gear are spur, helical, involute, or spline gears. The two spindles rotate at a proportional ratio, corresponding to the number of teeth to be carved. If we consider the ratio as 40:1, this means that the hob-spindle rotates 40 times when the one with the workpiece rotates only once. At the end of the process, the freshly manufactured gear has 40 teeth (Replacement of Conventional Gear Hobbing Machine… 2010,15). Therefore, with this method, there can be machined only the outer teeth.

3.2 Liebherr LC300

The newest models of hobbing machines can be partly or fully automated and come in various sizes. They can manufacture from tiny gears to even a few meters diameter ones, like the gears used in the ship engine.

One of the hobbing machine Tasowheel uses for gear manufacture is Liebherr LC300. In the Liebherr LC family are four models of machines: LC 200, LC 300, LC 380, and LC 500, where the numbers indicate the maximum workpiece diameter, in millimetres. It performs cuts using 6 CNC axes, safe and problem-free removal of chips with both wet and dry processing. All the post-processing steps can be done in the same machining round: indentation, deburring, or chamfer cut. The technical data of Liebherr LC 300 is presented in the first appendix at the end of this thesis. General dimensions of the Liebherr LC300 machine can be seen in the next picture.

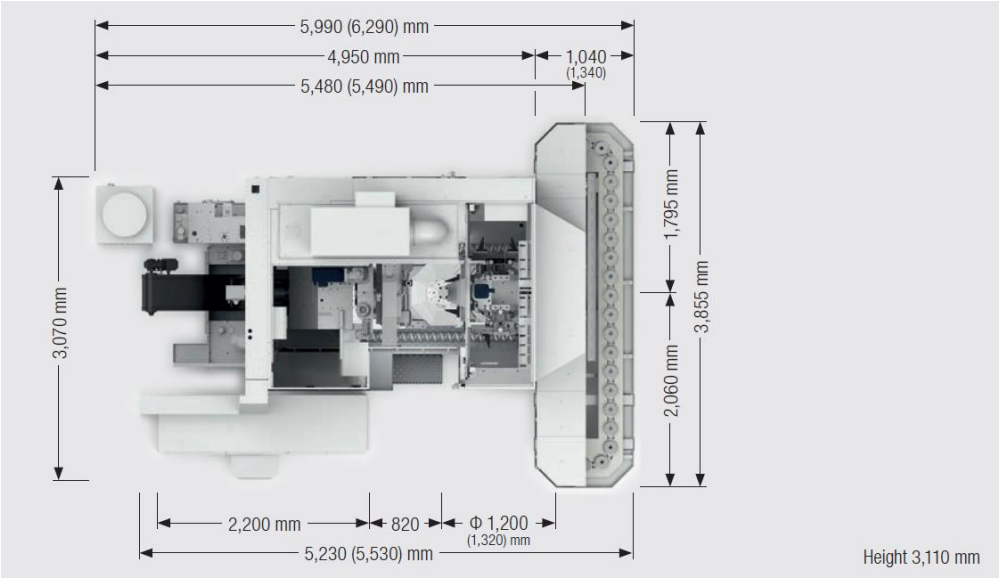

PICTURE 3. Liebherr LC300 machine dimensions (Liebherr brochure n.d., 5)

With a high-performance cutting (HPC) technology, the Liebherr LC300 machine can manufacture gears for the most strict industries like the aircraft, automotive, and machinery industry. On the right-hand side of the machine, the 3,855 mm side, is the chain conveyor that transports the workpieces to the machining table, facilitating thus the feeding process to the machining table. The number of spots on the chain conveyor can vary according to the weight and size of the workpiece.

The machining process starts with either writing the program used to cut the piece or simply open it if that specific product has been manufactured before. The human operator must fill the carriages on the chain conveyor with parts. The conveyor transports the parts, one by one, inside the machine, where a clutch hand takes the piece from the carriage and places it into the fixture for the gear hobbing process to start. The same clutch hand transfers the finished piece on the conveyor, that takes the piece outside the machine, through the opposite side of the conveyor. And the process is repeated for each piece.

3.3 Workstation

The hobbing machine workstation is one of the most active spots in the Tasowheel facility, thus the place where the efficiency can be well improved by bringing a robot for the feeding process. With the factory's existing floor setting, it would be at least challenging to deploy an industrial robot. The needed safety measures required for an industrial robot are costly and time lengthy. Tasowheel is trying to find a solution with no massive changes, where the outcome is a more efficient workstation.

PICTURE 4. Hobbing machine at Tasowheel

As seen in picture 4, the space around the machine is quite narrow, making it harder to build a caged feeding system. The tables on the right are there for the EUR-pallets bearing both unmachined and machined parts. Carriages on the conveyor chain are populated with cups that hold and transport shafts to and from the machining table. This machine has 30 carriages, but there are cases when not all of them are used, due to too large or heavy workpiece. The cups are replaced with trays when gear wheels are to be machined. The conveyor travels counter-clock. Unfinished parts go inside the machine in the direction

shown by the arrow, and the machined ones come from the other side. The drain gutter, where the workpieces are stored temporarily to drain off the oil from the machining process, is right along the conveyor. On the left side of the machine is the user panel.

4 COLLABORATIVE ROBOTS

4.1 General info

Nowadays, in the technological and manufacturing world, automation is a must. It is not anymore a question of “If”, but a question of “How much automation?”. Companies turn towards automation to address several issues on the production floor: cost reduction by decreasing errors, productivity, efficiency growth, or improving quality and safety. For small and medium-sized manufacturers (SMMs), usually, the production plant is not fully automated. Only some tasks, not complete processes, are in the care of robots.

McKinsey Global Institute has carried an extensive study, “Human Machines: A new era of automation in manufacturing”, across 46 countries, from both developed and developing worlds. The survey covered 80% of the global human workforce in manufacturing-related activities. Conducted in 2015, the study showed that 67% of the total human working hours were able to be automated with the available technology. The technology already in use and proved to be working. This number is probably higher much now, due to constant advancements in automation and technology in general.

Ideas and trials of a robotic arm can be found throughout the ages, and it is hard to point out a specific date when the industrial robot emerged. Just like in every other technological domain, the development of the industrial robot, as we know it now, happened through different steps and leaps taken by various entities. It is though accepted that the first design for a mechanical arm was developed in 1954 (patent granted in 1961) by American inventor George Devol. The Ultimate 001 robot was a prototype and the result of the collaboration between George Devol and Joseph Engelberger, an American physicist, engineer, and businessman. (Unimate: The first industrial robot n.d.)

The further advancement happened nevertheless, together with automation technology as an answer to the ever-evolving need on the production floor. The industrial robot was meant to replace the human for specific tasks, not to work

alongside him. The need to combine the endurance and precision of an industrial robot with the intelligence and skills of a human has led to the appearance of collaborative robotics. The main difference is that they have been designed to work alongside humans, so the size and weight of such a cobot demands slightly lighter safety measures than in the case of a typical industrial robot.

With all these being said, the International Federation of Robotics foresees a constant development and evolution in collaborative robotics. In “Top Trends Robotics 2020”, they talk about smarter robots, real-time action of the robots in collaborative applications, and a more reliable connection of robotics to the Industrial Internet of Things (IIoT). In the below picture, there are presented the different levels of collaboration concerning the needed safety measures.

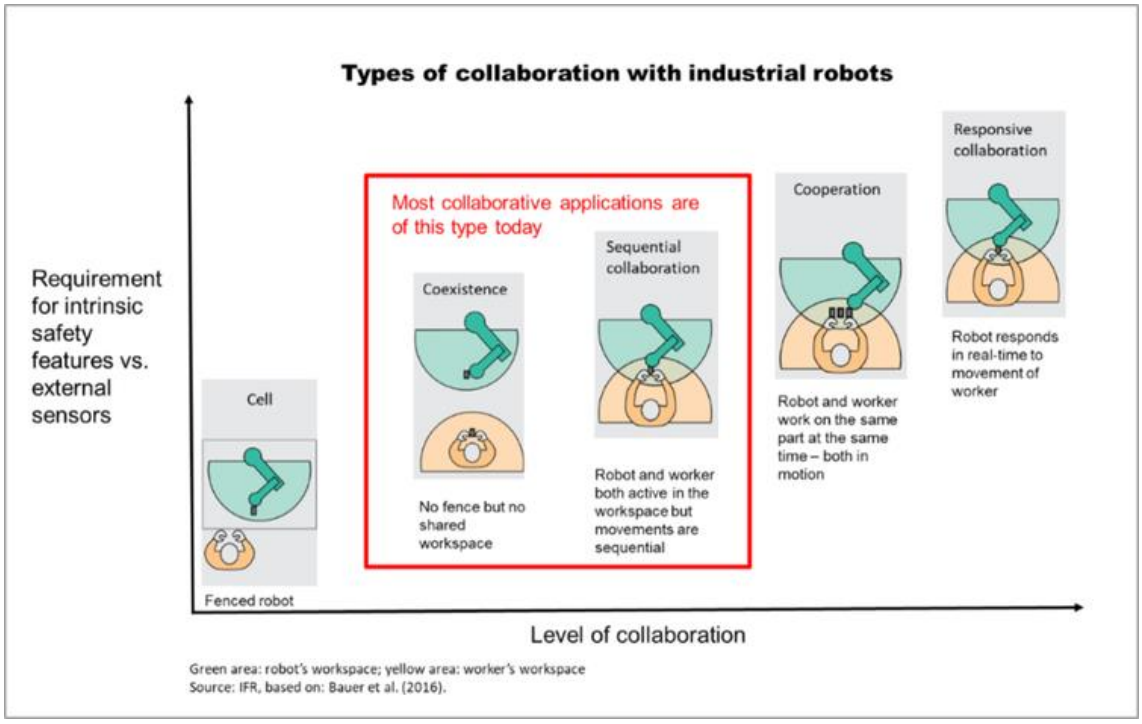

PICTURE 5. Types of collaboration with industrial robots (International Federation of Robotics 2020)

4.1.1 Cobots, a small history

In the past decades, the robotics industry has been developed with unprecedented velocity. What some may see the ever-growing of automation as a danger for human labour, in fact, is the most logical evolution in technology. The driving force has always been a more safe and efficient manufacturing process. As in the case of industrial robotics, no sole and independent entity can be considered as the principal source of cobots' development. One of these pioneers is Victor Scheinman. According to Jeff Chapman, from The Chapman Group, in the interview he gave to Cobots Guide (History of cobots by Jeff Chapman 2017), Victor Scheinman started to build a robotic arm with a group of students from Stanford University. In 1972, he produced Vicarm (seen in picture 6), the first electric arm. Later, Vicarm was further developed and rebranded as PUMA (Programmable Universal Machine for Assembly).

PICTURE 6. Vicarm (Arnold Reinhold 2013)

The progress in the design of what we now call cobot had a slow rate of speed before the 2000s. More than twenty years ago, the Occupational Safety and Health Administration (OSHA) became concerned about the way workers, in the automotive facilities, had to conduct their daily tasks. The high load, lack of ergonomy, and the repetitiveness of those operations were putting significant

strains on the bodies of human workers. And thus, technology brought the robotic arm one step closer to a better and more stable version. It was called Intelligent Assist Devices (A brief history of collaborative robots 2019). The idea went further on, with traditional robotics manufacturers, like Universal Robots, ABB Robotics, and Fanuc, taking the lead in developing collaborative robots.

The arrival of cobots was welcomed firstly by the SMMs, who could combine the human workforce with the robotic one. Another reason to acquire such a robot was the small investment compared to one of the industrial robot. The need for collaborative robots soon became evident in many sectors, from the manufacturing industry to food one.

According to a study conducted in 2019, “The collaborative robot market will exceed US$11 Billion by 2030”, by ABI Research, the yearly revenue for cobot will reach in 2030 a total value of US$11 billion. This will represent 29% of the overall industrial Robot market. In 2019 the revenue was at US$711 million. A previous study from 2015, from the same ABI Research Organisation, showed the situation in 2015 and the estimation for 2016 – 2020 time, pictured below. It is easy to see the close call of the ABI Research estimation.

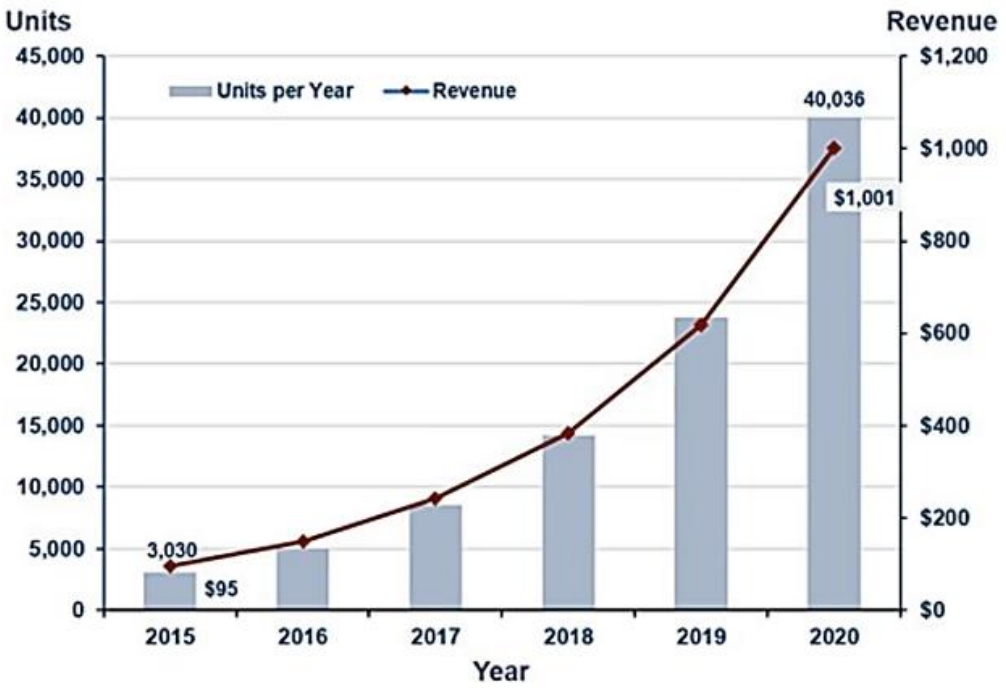

PICTURE 7. Market trends for collaborative robots (ABI Research 2015)

Another comprehensive investigation conducted by Maya Chiao for Interact Analysis, The collaborative robot market, has brought to light that in 2019, the overall robot market revenues experienced negative growth. However, the collaborative robot share maintained a steady high growth. A clear sign that the use of cobots is of high need nowadays in many applications. Another finding of this study shows that China was responsible in 2018 for one-third of total shipments, with an estimation of reaching half of the total shipments, by 2023.

4.1.2 Products on the market

There are many cobot manufacturers on the market, and the most used and known are Universal Robots, ABB Robotics, Omron, Kuka, and Fanuc. According to a market study conducted by Interact Analysis, with numbers dating 2017, Universal Robots is by far the most utilized cobot (Universal Robots continue to dominate the cobot market but faces many challenges 2018). A graphic representation of the market share can be seen in the below picture.

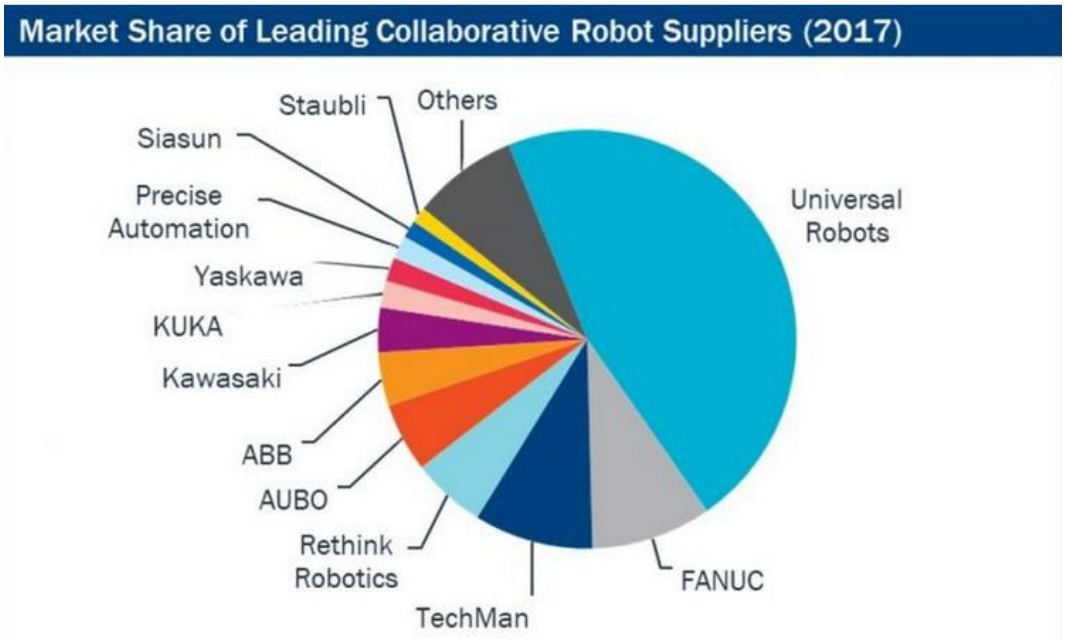

PICTURE 8. Market share of collaborative robot supplier – 2017 situation (Universal Robots continue… 2018)

Subsequently, in 2019, the numbers changed, but the overall ranking is similar, with Universal Robots in the lead. Future Market Insights has studied the market and had shown in their paperwork “Collaborative Robots: Preparing a future for human-to-robot interaction”, a decrease in Universal Robots share, with Fanuc, ABB and TechMan close behind. More precise numbers are not freely available for the public, only the following graphic representation, depicted in the next picture.

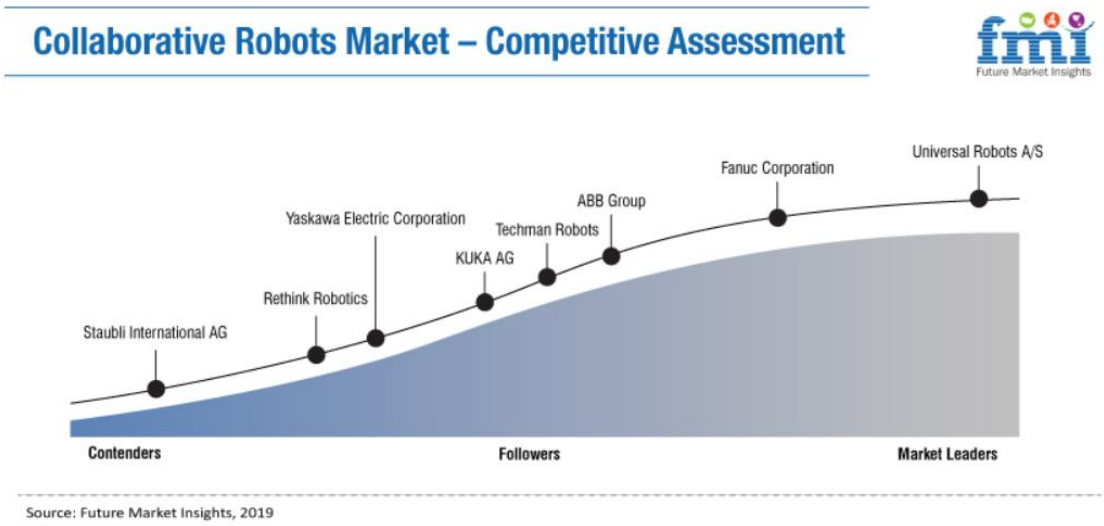

PICTURE 9. Market share of collaborative robot supplier – 2019 situation (Collaborative Robots… 2019)

Since the emerging of cobots into the market, the wrong idea that a cobot can work freely, along with the operator without the usual caging system or borders, has been perpetuated. However, it is not entirely true. The cobot is indeed safer than the large, conventional industrial robot in terms of the open space environment. Still, this does not mean it can share the working area freely with the human operator. Depending on the nature of the objects handled by the cobot, if they are sharp or cumbersome, a cage might be the right safety measure for the workstation. Otherwise, a protective separation distance must be drawn. The whole collaboration between the cobot and the operator is thoroughly analysed and assessed to meet the minimum safety standards.

When considering investing in a cobot, there are a few particularities that have to be addressed and break down into components. Things like cobot’s weight, degrees of freedom, payload, reach, the tasks it has to accomplish, and of

course, price range are the main criteria when choosing the right model. A comparison of the most used cobots on the market put together by Cobots Guide in 2017, lists 22 models by the payload, ranging from 0,5 kg up to 35 kg. This list can be seen in the second Appendix, sorted by payload, alongside another list compiled by Direct Industry.

In their paperwork “Specifications for transportable machine tending robot”, Olli Mäkinen, Ossi Perä, Jussi Pienisaari, Eetu Piki, and Tomi Porras have compared 12 different cobot models. In contrast to the previous lists, this one is with up-to-date cobot models. In the following table, they put together info about maximum payload, reach and weight of the cobot, and personal remarks. The comments in the table were, of course, based on their judgment and pre-set requirements for their paperwork. In a production facility, where power transmission components are manufactured, the to-be-handled products are usually made of steel. The payload of the cobot is the gross weight, so the combined weight of the possible accessories, as gripper or camera, must be considered.

Studying table 2, one can observe the relatively small range value of around one meter. If the values get closer to two meters, then the cobot weight is considerably bigger than of the others. Fanuc CR-35iA model, with a range of 1.8 m weights 990 kg. On the sixth position is the Universal Robots UR10e cobot. With a difference of only half a meter in reach, the UR cobot is almost 30 times lighter.

TABLE 2. Cobot models comparison chart (Mäkinen et al. 2020, edited)

No.	Model	Payload (kg)	Reach (m)	Weight (kg)	Comments
1.	Epson C8L	8	1.0	52	Too small payload
2.	Epson C8XL	8	1.4	62	Too small payload
3.	Fanuc CR-14iA/L	14	0.9	55	Decent payload, smallish reach
4.	Fanuc CR-15iA	15	1.4	255	Good payload and reach, built-in sensor for human detection
5.	Fanuc CR-35iA	35	1.8	990	Too heavy to be moved on a cart
6.	Universal Robots UR10	10	1.3	33.5	Too small payload
7.	Universal Robots UR16	16	0.9	33.1	Good payload, smallish reach
8.	ESI C-15	15	1.3	100	Heavy, good payload and reach
9.	Techman Robot/Omron TM12	12	1.1	33.3	Too small payload
10.	Techman Robot/Omron TM14	14	1.3	32.6	Decent payload, smallish reach
11.	Techman Robot/Omron TM12M	12	1.1	33.3	Too small payload
12.	Techman Robot/Omron TM14M	14	1.3	32.6	Decent payload, smallish reach

4.1.3 Terms and definitions

A series of terms are used according to Technical Specification in ISO/TS 15066 standard. For a better understanding and to lower the risk of misinterpretation, they are defined below.

Collaborative workspace – space where the robot system (including the workpiece) and a human can perform assignments concurrently during production operation.
Collaborative operation – a state in which a purposely designed robot system and an operator work within a collaborative workspace.
Quasi-static contact – contact between an operator and part of a robot system, where the operator body part can be clamped between a moving part of a robot system and another fixed or moving part of the robot cell.
Transient contact – contact between an operator and part of a robot system, where the operator body part can is not clamped and can recoil or retract from the moving part of the robot system.
Protective separation distance – the shortest permissible distance between any hazardous moving part of the robot system and any human in the collaborative workspace; the value of this distance can be fixed or variable.

4.2 UR10e – cobot model

Universal Robots is known as a market leader amongst cobot suppliers. Starting from a clear leadership position back in the beginnings of the 2000s now has to face the close competition. Competitors saw the opportunity and continued the developing process of collaborative robots, which started decades ago. Besides the need for closer collaboration between the robot and the operator, Universal Robots has designed a cobot that is easy to program with simple and fast setup. To make the matter easier, Universal Robots has provided for anyone interested in learning how to program their cobots, free online courses. The training programme is open 24/7 and available in eight languages. The given instructions are enough to program the cobot fully, plus they have a support team that can help if needed.

The e-Series cobot family has four members: UR3e, UR5e, UR10e, and UR16e (as seen in picture 10). Universal Robots promote this cobot series by affirming they design it for flexible deployment, easy programming, quick set-up, fast pay-back, and upgraded safety functions. In the case of SMM businesses, the possibility of transferring it from one workstation to another is almost vital, and the easy setup is the main factor that facilitates a straightforward relocation. The main differences in the e-series models are the maximum payload and the reach of the arm. The number in the name of the cobot indicates the maximum payload it can sustain, in kilograms. (Meet the e-series family 2020)

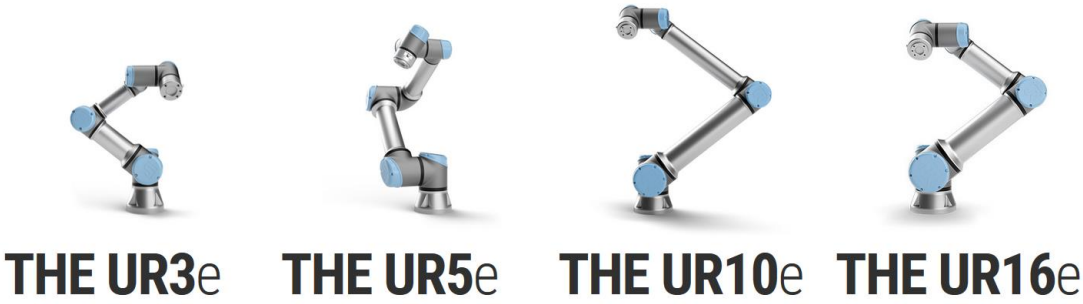

PICTURE 10. E-series from Universal Robots (Meet the e-series family 2020)

The UR10e cobot technical details, as provided by the producer, are presented in the third appendix. Data about cobot’s weight, payload, reach, force range, and repeatability are essential when deciding on the model.

4.3 Accessories

A robotic arm's primary function is to interact with the surroundings. For the cobot to understand what, where, and when to act, it needs a set of hardware and software components. These components are gripper, camera, and different kinds of sensors, like contact or force sensor. Except for the grippers, not all these components are necessarily required when using a cobot.

4.3.1 Machine vision

Machine vision technology, likewise robotics, is proliferating. The high speed in its evolution is sustained by the need to manufacture more and more finely defined products with fastidious tolerance values. Machine vision (MV) is the application of computer vision to industry and manufacturing (Batchelor, B 2012). MV is used to perform precise and exact operations as counting objects, reading serial numbers or pick and place parts in a narrow, predefined area.

Robotiq Vision System Camera Instruction Manual provides essential information about wrist camera use. There are two distinct steps when using a cobot with MV. The first one is the object teaching when writing the program, and then the camera use during actual runtime. Each situation has its requirements, not wholly different. The first step, of object teaching, is more challenging than the second. The conditions that it must meet are necessary to obtain good results.

The first and most important requirement is good lighting. Qualitative lighting ensures proper object definition without errors. During regular use, lighting does not need to be as rigorous as during the object teaching, but it must always be the same, from the same angle, no new, oscillating shades. Any change in light can result in false positive or negative. Lenses must be clean, free from oil, dust, soot, water or any other residue. The workpiece must be placed in a proper angle representative for its shape. This means that a shaft will not be positioned facing the camera with one of its ends, but its length.

It is fair to declare that MV is not an asset to be used by default. The workstation environment must meet the above demands. Otherwise, the inevitable changes in the facility setup and production workflow may overpass the benefits of cobot deployment.

4.3.2 Grippers

A vital branch in robotics is the design of grippers. The gripper is an end effector, meaning a device or tool connected to the mechanical interface to enable

the robot to perform its task. It has the function of grabbing and manipulating the part. Grippers can be mechanical hands as well as hooks, suction devices, magnets, or even bladder type. For the mechanical ones, a broad classification is presented in the next table.

TABLE 3. Classification of grippers

Characteristic	Models
Source of power	Pneumatic
	Hydraulic
	Electrical
Gripping style	Parallel
	Angular
	External
	Internal
Number of jaws	Two
	Three
Environmental capabilities	High temperatures
	Dusty environment
	Chemical exposure
Others	Payload
	Gripper weight and dimensions

All these kinds of mechanical grippers can hold the workpiece either by using force, by taking advantage of the shape of the part to be handled or by a combination of both. As grippers are used for a wide range of applications, grippers are designed accordingly to the type of job it must execute. The two fingers gripper can be seen in the following picture. It resembles the human hand with its wrist and fingers. The joint system of the gripper has been created for smooth and complex manipulation capabilities.

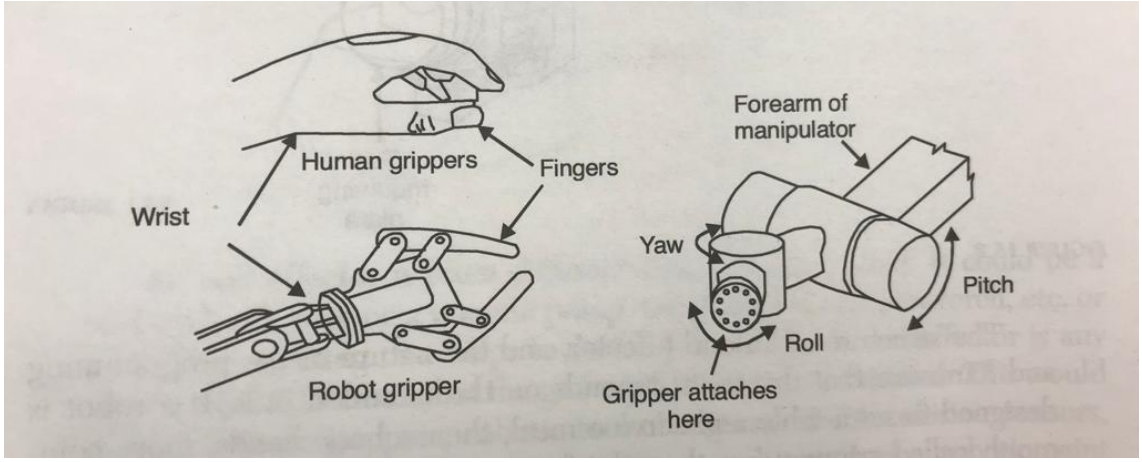

PICTURE 11. Two fingers Gripper (Gupta 2017, 458)

There are cases when the grippers must be directly designed for the job, but in most cases, it is enough only if the fingers are fit made for the parts that must be handled. As a general rule, engineers always try to find a gripper that physically mates with the part. This way, the possibility of dropping the piece is at its lowest degree.

4.3.3 Force copilot and force sensor

The force sensor measures the amount of force the robotic arm is applying when executing the task given, be that the grabbing force or the force with which the arm is moving. The manipulation of brittle and easy to crush objects would be impossible without force sensors. For these kinds of objects, a tactile sensor is formed of an array of pressure-sensitive piezoelectric material. When the gripper tightens around the workpiece, the piezoelectric material conducts more current. The cobot receives these massages and can adjust force according to need.

The force sensor system is formed of physical sensor components (sensor, strain gauges, sensor cable, coupling, tool plate) mounted onto the cobot and a software package that reads, processes, and uses all the received data. Like the other cobot peripherals, the force sensors operate under certain conditions. Apart from dust, soot, and liquids avoidance, the sensors must be at a distance

of any powerful electromagnetic influence, with operating temperatures ranging from 15º to 35ºC.

4.4 Safety

International Standardisation Organisation has developed guidance for collaborative robot operation in 2016. The set of safety rules of industrial robots is not enough for the collaborative ones. The very essence of cobots is practically breaking the safety measures of industrial robots – the operator can access the working space of the cobot. However, not without predesignated borders, introduced after a comprehensive risk assessment. It has been nonetheless, wrongly understood, by many in the manufacturing industry, that collaborative robots can work freely, without boundaries. There is a set of four different methods that can be used to attain a safe environment by collaborative workspace.

For every cobot system implementation, the factory must follow the guidance given by international standards. In this case, SFS-EN ISO 10218-1 “Robots and robotic devices. Safety requirements for industrial robots. Part 1: Robots”, SFS-EN ISO 10218-2 “Robots and robotic devices. Safety requirements for industrial robots. Part 2: Robot systems and implementation” and ISO/TS 15066 Standard “Robots and robotic devices – Collaborative robots”. The first two are for industrial robots in general, and the last one is specific for collaborative robots. Extracted from the SFS-EN ISO 10218-1 standard, the four different safety measures are presented below.

Safety-rated monitored stop. Robot motion is ceased before an operator enters the collaborative workspace. The robot is stopped with drive power active, while a monitoring system with a specified adequate safety performance ensures that the robot does not move.

Hand guiding. When provided, hand guiding equipment shall be located close to the end-effector and shall be equipped with an emergency stop function and an enabling device.

Speed and separation monitoring. The robot shall maintain a determined speed and separation distance from the operator. These functions may be accomplished by integral features or a combination of external inputs. Detection of the failure to maintain the determined speed or separation distance shall result in a protective stop. The relative speeds of the operator and robot need to be considered when calculating the minimum safe separation distance.

Power and force limiting. Power and force values are adjusted for a changing collaborative space; if any parameter limit is exceeded, a protective stop shall be issued. Physical contact between robot and operator can occur intentionally or unintentionally.

When a company decides to automate a workstation, they usually turn to a third-party supplier, an integrator. The integrator entity is aware of all the safety requirements and can put all the directives into practice correctly. A complete and safe cobot deployment happens when the environment and all the related parties are analysed and designed according to the standards. In the case of a cobot system implementation, an analysis of all the products the cobot handles must be conducted.

5 PROBLEM DEFINITION

5.1 Initial situation

The objective of this thesis is to research, analyse and propose to Tasowheel the best solution for collaborative robot (cobot) use at a hobbing machine, at which there are manufactured about 40 different products. Each product is produced in series, and ranges from 50 pieces to more than 2,000. This implies long and extended production days.

To understand the process entirely, Antti Ratilainen, who is the person responsible for the hobbing workstation, has agreed to share his knowledge and the necessary information about the present situation at the Liebherr LC300 hobbing machine. He is well placed to know what works well, what does not work and what needs to be improved. The data about the current situation, workflow, problems and some personal insights have been obtained through close collaboration with him during the research phase of this thesis.

Naturally, a product that is part way through the production series lands at the hobbing workstation after the previous phase has been completed. All the pieces are transported from one workstation to the other in EUR-pallets, and the arrangement and position of the workpieces can differ from one phase to the next.

The general workflow at the hobbing machine starts with the operator, that brings to the hobbing machine workstation EUR-pallet with the workpieces to be machined. The pallet is then placed onto one of the tables in front of the chain conveyor. Another empty pallet is brought, for the processed parts to be stored. The operator mounts the right carriage system onto the chain conveyor: either cups for shafts or plates for gear wheels. The machining program is opened, and a few test runs are conducted to calibrate the machine and to check for any errors. The operator populates the carriages with as many workpieces as possible (within the size and weight limits). When all is set, the first workpiece is manufactured, and then measured 100%. Teeth profile, diameters, geometrical

tolerances, everything is checked to make sure the program is working correctly. If the first piece is matching the values from the drawing, the manufacturing process of the batch can continue. Otherwise, the operator checks the workpiece and searches for the element that is faulty until the created workpiece's measurements are 100% correct. The operator visits the workstation from time to time during manufacturing, to handle the chain conveyor feeding process and to do quality-check measurements. When all the pieces have been machined, the finished parts are transferred to the next workstation, the next set arrives, and the process starts once more.

The previous steps are nevertheless slightly different for each series. Because of the nature of the process, waiting times develop, and these occur during the manufacturing of the whole set. Thus, to minimize the waiting time and to maximize productiveness, the operator has to attend to two machines at the same time. However, there is plenty of room for improvement in other matters.

There are regular instances when the operator needs to attend both workstations at the same time, and in many cases, one is related to the conveyor feeding process. The same task is doomed to wait if the hobbing machine has finished processing all the workpieces loaded into the carriages and the operator is at lunch. During a night run, the hobbing machine can manufacture only as many pieces as there are on the chain conveyor. As usual, there is a direct risk linked to the human operator: fatigue, distraction or simply negligence can be a significant factor in manufacturing faulty products.

It is easily noticeable that the role of the operator is of high importance at this workstation. The combination of tasks that he/she needs to manage is complex and spans the whole manufacturing cycle. His/her actions have a direct or indirect impact on the final product. There are nevertheless, moments of machine errors with roots in its software, but these instances are not connected to the cobot topic.

5.2 Need identification

To succeed in improving the aforementioned situation and to make sure that the solution chosen is the right one, the need must be outlined clearly and understood. The defined need points precisely at the core of the problem, and when it is addressed directly, the outcome will be the desired one. In this case, the need is to decrease production costs at the hobbing workstation without affecting the quality of the manufactured product. This need must always be borne in mind for the present thesis. It implies that many specifications must be defined, which will have a direct impact on the production process.

A furthermore split, into more specific needs help in detect the right solutions. The efficiency is increased by reducing the time-waste by eliminating the idle moments of the hobbing machine. The possibility of a prolonged night run and less scrap also lowers the costs. While this shift from human to the robot is a considerable change, cobot deployment must be designed with as fewer modifications as possible.

5.3 General requirements

Cobot deployment into a production facility will necessitate some changes. Robotic implementation is always a team effort. All the possible adjustments have to be addressed and analysed thoroughly to ensure that the quality of the finished product matches the customer’s criteria. The requirements, as given from the perspective of the finished piece, include close collaboration and efficient teamwork amongst everybody involved in this project. Resistance to change usually comes from the fear that people are laid off, to make space for the robots. While this aspect cannot be argued, it is not the case in all situations. The human operator can focus better on other tasks. Before starting this process, information meetings and discussions with all the parties involved in this automation process should address and clarify all issues. Transparency and secure and accessible flow of information facilitate a coordinated team heading towards

success. Another requirement is a smooth material flow and a steady manufacturing process for the parts to be analysed. In the end, all of the above must be translated into a flawless and reliable cobot deployment plan.

5.4 Preset assumptions

Given the fact that this thesis is investigating the workflow of using a cobot by a hobbing machine, some aspects are outside the area of the main topic. Hence, they need to be framed as assumptions. These assumptions were agreed together with the thesis supervisors from Tasowheel: production manager Mikael Mäkinen and quality manager Kimmo Hyvärinen. Other assumptions would most probably emerge when analysing each product individually. On these grounds, the present thesis is purely theoretical.

As already mentioned in the introduction of this thesis, the student team from Tampere University has conducted tests in the university's lab facility, to check how cobot programming and the docking system work. They have concluded that deploying a cobot at a hobbing machine is possible. On the grounds of their findings, there are a few assumptions imposed for this thesis. The first one is the correct hardware and software installation, elimination of cobot software errors. The cobot program works well for the pick-and-place task, even though the tests were conducted using another cobot model, the UR5e. Tasowheel requires that it is possible to use the cobot at other workstations too, so the docking and undocking of the cobot must pose no problems. Thru the docking connection, for a faster process, the cobot understands at what workstation it is, so no further operations and program edits are needed.

Conversely, more assumptions were made regardless of the papers mentioned previously. The model of the cobot will be the UR10e, which is the model the company is considering purchasing. Its reach–payload ratio answers the best to most of the required tasks it needs to carry at the workstation. The cobot deployment at the hobbing workstation must follow the required safety measures. The model of the cart or stand on which the cobot will be placed must meet the needs for the workstation: it must have precise and easy docking, be sturdy,

have an adjustable height and be easy to transport. The part production process, for each of the nine parts, is adequately designed and mature. Problems regarding material flow and manufacturing steps result in defective products – an increase in production costs. During a night run, the cobot must do the job without any problems.

5.5 Pick and place

When carrying out the feeding process for the hobbing machine, the cobot will perform a pick-and-place task. This means it has to take the pieces from pallets and place them into the carriages on the chain conveyor. After the cutting of the part has been finished, the cobot takes it from the carriage and puts it onto the EUR-pallets, along with the rest of the finished pieces. Depending on the workpiece, intermediate steps might be needed for oil drainage, the proper orientation of the piece when placed or cleaning the carriages and parts as well.

The carriages hold either cups (for shafts) or plates (for gear wheels), both systems presented in picture 12 and 13. The cups are of different sizes and shapes, based on the dimensions of the shafts. In the case of gear manufacturing, the plates are the same for all the gear-wheel-type products. Three small bolts secure the wheel to the plate.

PICTURE 12. Cups on a chain conveyor

PICTURE 13. Plates on a chain conveyor

5.6 Methods and materials

The similarity between industrial robots and cobots is the basis for this research paper. The amount of literature regarding collaborative robots is growing fast, but it is not yet covering all the details and particular situations. When analysing and designing the set of solutions, the similarities between these two types of robots have been used.

The instruction manuals for the UR10e cobot model, Robotiq grippers and the wrist camera helped to outline the requirements individually. It was also necessary to use the ISO/TS 15066 standard, “Robots and robotic devices – Collaborative robots”. Even though this thesis is not conducting a robotic-cell design and safety study, the information in the standards document bestowed a better definition of cobot use.

In addition to the digital material used, as listed in the references, three books formed the theoretical basis for building up and developing the solution set. The extracted data was applied from a cobot-deployment perspective. Guidelines for needs, requirements, issues and risk definitions were utilized and adapted to the given situation. The books are Gupta, A. K. Arora, S. K. Westcott, J. R. 2017, Industrial Automation and Robotics, Glaser, A. 2009, Industrial Robotics: How to implement the right system for your plant? and Bouchard, S. (n.d.), Lean Robotics: A guide to making your robots week in your factory.

All the material mentioned above was applied to the information Antti Ratilainen provided. He is the hobbing workstation responsible. Since the research phase of this thesis up till the end, visits, and observations right at the workstation contributed to the final result.

6 WORKFLOW ANALYSIS

6.1 Analysis premises

There are a few aspects that must be defined before detailing the actual analysis. With there being nine parts, many actions are repeated, and others are specific to some situations. The part drawings cannot be displayed in this thesis as they belong to and were sourced from Tasowheel clients. It is nevertheless necessary to show the shape and a few relevant dimensions of the parts to build the case. Therefore, the original drawing has been edited, to only show as much as is needed. The sizes in the drawings are given in millimetres.

The EUR-pallet or EPAL-pallet is the standard European pallet as specified by the European Pallet Association. They are the most widely used exchangeable pallet in the world (EPAL Euro Pallet n.d.). The standard base dimension in millimetres is 800 x 1200, and one frame is 200mm tall. As illustrated in picture 14, one or more frames can be placed on top of another, making it as tall as needed.

PICTURE 14. EUR-pallet (kruizinga.com n.d.)

Shafts are stored in pallets using either plywood in which holes have been drilled or are guarded by plastic walls, as shown in picture 15. In both cases, the pieces are kept safe and secure from colliding, which can cause chips and dents to occur.

PICTURE 15. Plastic separators

Gear wheels are kept in a vertical position in pallets, with wood or plastic separators between the lines (as shown in picture 16).

PICTURE 16. Gears positioned in pallets

6.1.1 Possible liabilities

As in every theoretical paper, the solutions and findings can have a slightly different outcome when put into practice. The primary risk is the one associated with the change itself. There are many parts involved when deploying a cobot system, and all of them have to work together. In general, a robot deployment happens after a thorough analysis has been completed, and all the possible and probable dangers have been addressed. In the case of an unexpected or unforeseen situation, the robot lacks the capability to respond. The robot only knows as much as is in its programming. Of course, in such a context, the safety measures at the workstation must secure the environment from any danger.

A cobot deployment must be done only after the manufacturing process has become stable and is as flawless as possible. It is very tempting to use the cobot for all the series that are manufactured at the hobbing workstation. However, if the process itself is not mature enough, the scrap percentage can grow when using a cobot system.

6.1.2 Cobot position at the workstation

The workstation is presented in section 3.3. Logically, the best place for the cobot is in front of the chain conveyor, to which the cobot must load and unload the pieces. The next pictures (picture 17 and 18) illustrate the environment around the Liebherr LC300 machine, which consists of two tables and a space between them where the cobot is planned to be placed. The cobot itself is not represented in the picture, as this would have made the illustration too congested. The 800mm gap, where the cobot is to be placed, is approximated and can vary depending on the cobot stand type. With the available sands on the market, this gap can be less than this approximation.

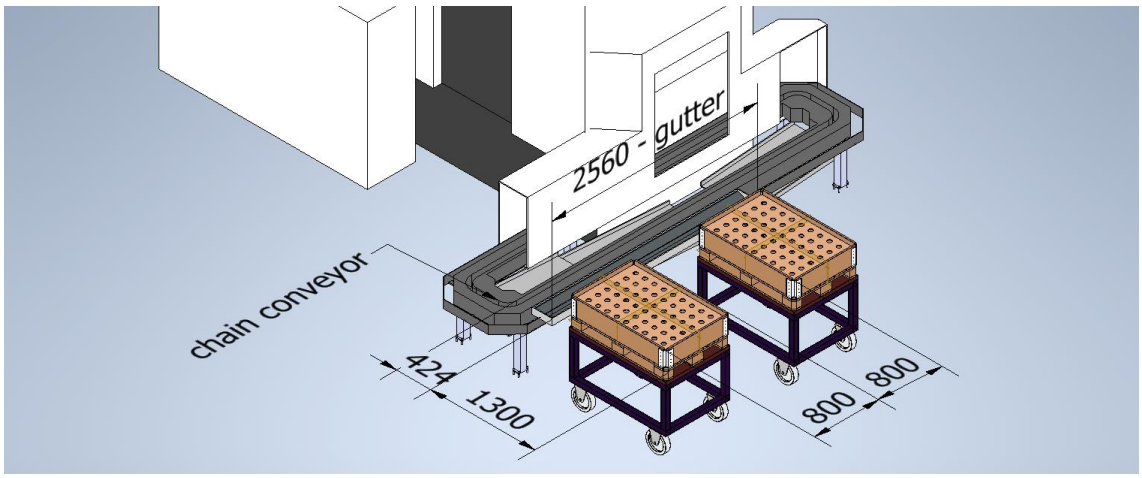

PICTURE 17. 3D model of the workstation (Mäkinen, O.: Liebherr LC300 machine, Balog, D.: gutter, tables, pallets)

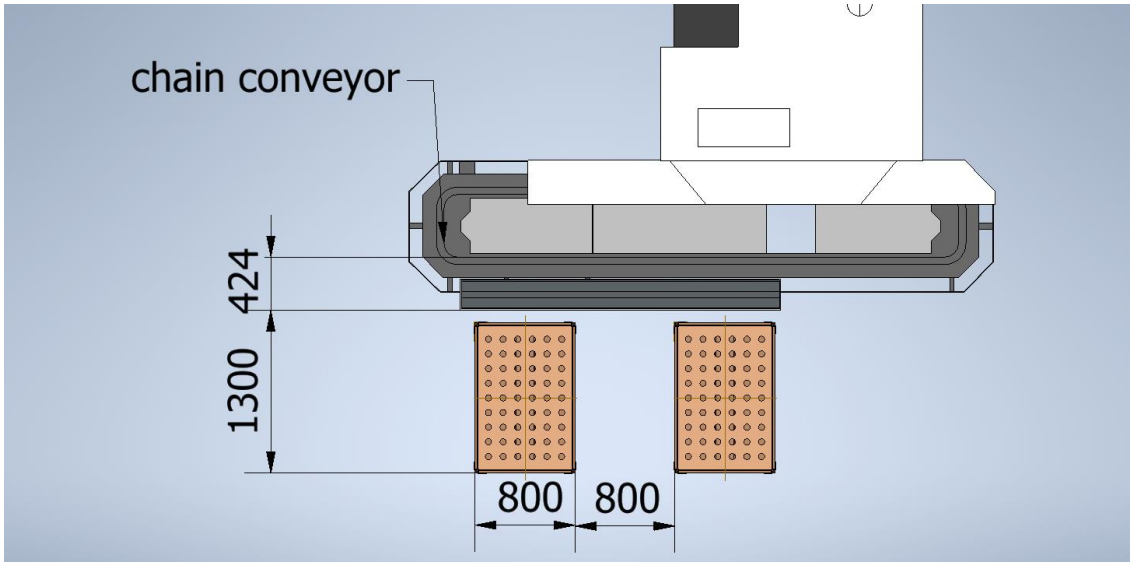

PICTURE 18. 3D model of the workstation, as seen from above (Mäkinen, O.: Liebherr LC300 machine, Balog, D.: gutter, tables, pallets)

6.1.3 Part list

The core subject of this thesis is the workflow analysis for nine parts processed by the hobbing machine. As shown in the following table, they are either gears, shafts or a gear shaft. The weight is also given because of the importance it has: the heavier the part, the harder it is for the cobot to handle it. The chosen cobot model for this thesis (UR10e) has a total payload of 10kg.

TABLE 4. List of all nine parts

Part No.	Product type	Weight (kg)	Control Plan
1	Shaft	1.0	No
2	Shaft	1.5	No
3	Shaft	1.9	No
4	Shaft	7.4	Yes
5	Gear shaft	4.2	No
6	Gear	0.3	Yes
7	Gear	0.9	Yes
8	Gear	1.6	No
9	Gear	3.5	Yes

In table 4, the parts are grouped by the type of product, then given by weight in ascending order. The last column indicates if there is a control plan or not. Control plans are written descriptions of the systems for controlling parts and processes (Advanced Production Quality… 2008, 4). In other words, they specify what dimensions are measured and how often. During every manufacturing phase, parts are measured regularly, to check if the dimensions of the freshly cut parts are inside the tolerances. For the parts without control plans, the dimensions of the manufactured parts are still checked, but with less rigidity. This is because of a more steady manufacture process, or broader tolerances. A set of internal measurement rules dictate what and how ofter the finished part is checked.

In addition to the measurements that the workpieces must meet, another essential demand is that the quality of the surface is not permitted to have scratches, dents or any kind of irregularity. The root of these flaws is, after all, the operator. By mistake, he/she can hit the pieces into one another, or the parts may not be adequately clean when they go into the machining process, where the fixture is tight and strong around the part. In these cases, the workpiece becomes scrap. In other words, it is a loss for Tasowheel.

6.1.4 Gripper model

Robotiq grippers are designed to match the technical requirements of the cobot for the whole Universal Robots e-series. From their grippers selection, the best match is the 2F-85 model (as illustrated in picture 19). With an 85 mm stroke, 850 g weight and a payload of up to 5 kg, it meets the requirements for most of the parts in the part list (as given in table 4). The design of the gripper is suitable for handling these products, and there is no need for personalized or form-fit fingertips.

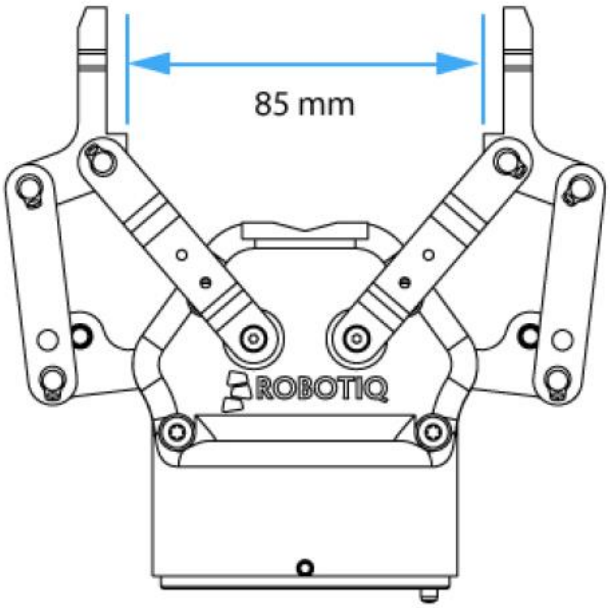

PICTURE 19. Robotiq gripper 2F-85 (Adaptive robot gripper… 2016, 6)

When grabbing a part, this gripper has two modes: encompassing and parallel grip (both shown in picture 20). The encompassing grip is the desired one when it offers a more secure clamp. The parallel grip can be either external or internal. The technical specifications are presented in appendix 4.

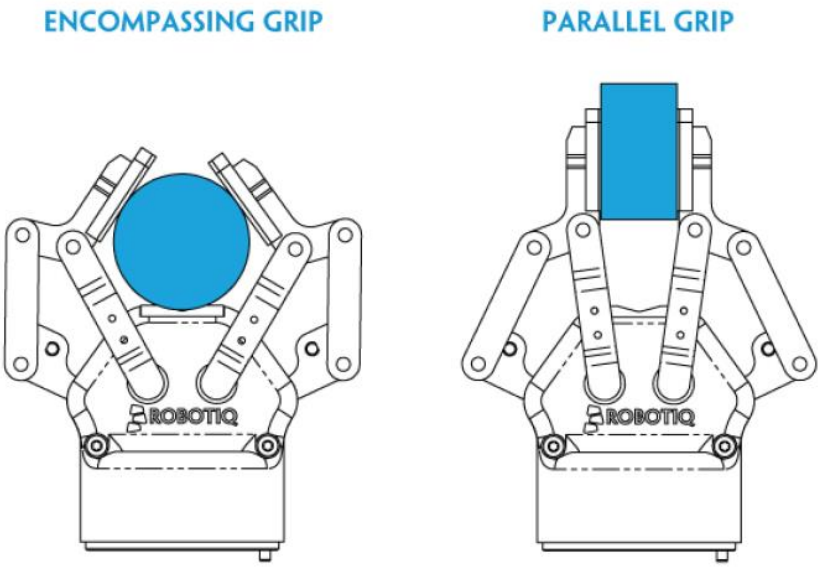

PICTURE 20. Object picking (Adaptive robot gripper… 2016, 7)

Closing or opening is done via the "Go to requested position" command and is input to the Gripper. Whether the fingers close to produce an encompassing or parallel grip, the decision is made at the Gripper level automatically. The part's geometry and the relative position of the part with respect to the Gripper are the deciding factors on the gripping style. In other words, picking the same part could result in either an encompassing or a fingertip grip based on a part's position and geometry. (Adaptive robot gripper… 2016, 7)

6.1.5 Analysis structure

For each of the nine parts, the analysis is broken down into six elements. Each one is based on the previous. The general initial workflow is similar for all nine parts and is detailed in section 5.1. Because of many similar products on this list, they have been grouped and studied together. Besides their size, shape and weight, the initial workflow is almost the same. Therefore, the proposed workflow using the cobot is also the same.

After mapping the initial workflow, a set of requirements for the new and improved collaborative system is outlined. This second step is essential, as it represents the ideal situation at the hobbing workstation. Then the proposed work-

flow using the cobot is described. If the right solutions are found, then cobot deployment is possible. The next three points examine the effectiveness of the proposed workflow. The risks and benefits are concerned with only the changes that emerge from the deployment of the cobot at the hobbing machine. The general risks relate to the function of the cobot, how well the program was designed, and other secondary tasks the cobot must fulfil. Apart from these, cobot-related risks can be minimized with proper training and of everybody involved taking appropriate responsibility.

These six steps are as follows:

1. Initial workflow
2. Requirements
3. Proposed workflow using the cobot
4. Evaluation of changes
5. Risks
6. Benefits.

The first steps of the proposed workflow are the same for all the parts. This is also true for some steps during the process, such as cleaning the parts, cups and plates. These general steps that the cobot follows are the same no matter which part is being manufactured.

Proposed workflow using the cobot – the universal steps

Naturally, the production process commences with the pallet, brought to the Liebherr LC300 workstation and placed on one of the two tables located in front of the gutter. The operator positions both tables and the cobot stand in the right places for the program to run. The operator starts the hobbing machine for the test run. When the machine has been calibrated, and the first piece has passed the measurements check, the operator starts the cobot program, and the cobot initiates the feeding process for the chain conveyor. This is when the operator can leave the workstation in the “hands” of the cobot. The cobot cleans each carriage, which is either cup or plate (cleaning step explained below) before filling it with parts. As a precautionary method and to make sure the surface of the

processed piece is flawless, the cobot lightly bumps each piece on the plastic gutter to make all the material leftovers to slide off. The cobot completes this step both before and after the cutting process. The operator comes to the workstation after all the pieces in the series have been cut or when one pallet is filled with processed parts. He then does the quality check.

Cleaning the plates and cups

The cleaning of the plates is done with the help of a rag. The cobot takes the rag and wipes the plate with it, just before it puts the gear wheel on the plate. To make sure that the rag is not too dirty and loaded with metal chips, it must be replaced regularly. Rag replacement can be programmed so that, after 10 plates, the cobot knows it must take a clean rag from the next pick-up point. For the cups, the cobot takes a magnetic rod, which swabs the interior of the cup to attract all the metal residue. For the most part, the cup is clean. There is this chance of chip leftovers, so this step is a “just to be sure” step. The cleaning of the magnetic rod happens when the human operator comes at the workstation.

6.2 Shafts

The first category of parts is the shaft. A shaft is a component in a power transmission system that connects at least two rotating elements. The system is known as a shaft coupling. In the next subsections, all four shafts and one gear shaft are presented and analysed based on the six points from subsection 6.1.5.

6.2.1 First, second and third parts

Because of the high similarity in these three parts, they are analyzed altogether. The manufacturing process, size of the series, part size, and weight are all comparable (see table 4 on page 41). With a weight of one or two kilograms, the cobot handling happens smoothly. The next three pictures, 21, 22 and 23, edited from the clients’ drawings, illustrate each shaft.

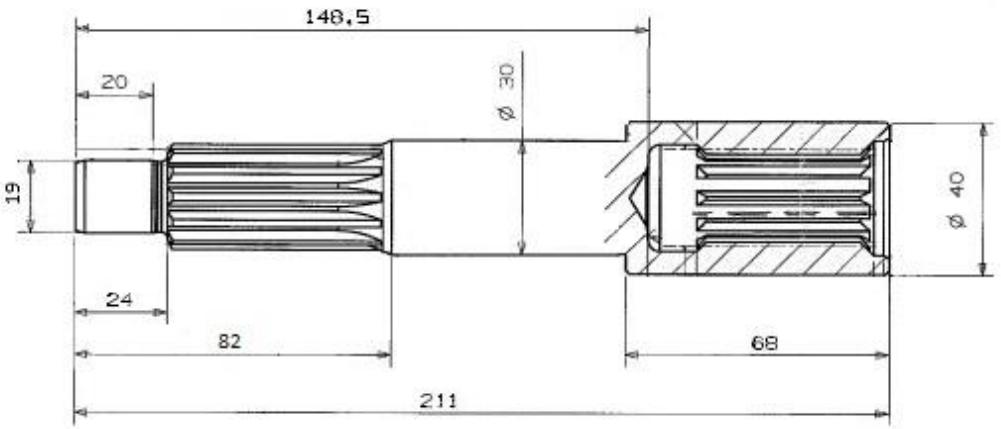

PICTURE 21. Shaft no. 1

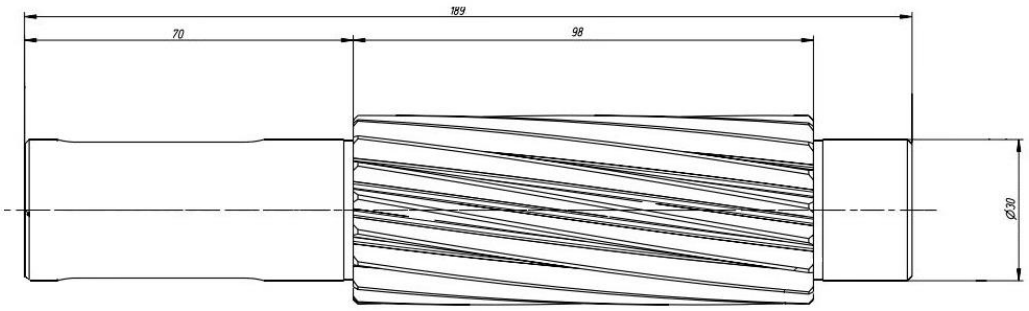

PICTURE 22. Shaft no. 2

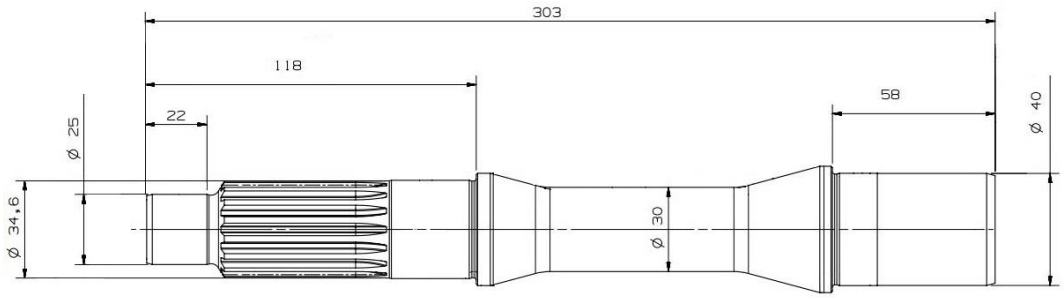

PICTURE 23. Shaft no. 3

Initial workflow

The EUR-pallets carrying this set can arrive at the hobbing workstation either from the turning centre or from internal-gear shaping, where the internal gear is cut. Here, the decision factor is the waiting line at the internal-gear-shaping machine. When there is a long line, the series goes straight to the hobbing ma-

chine to save time. In this case, the internal-gear-shaping production step follows the hobbing one. If the pallets with the parts come from the turning centre, then they are placed in a lying-down position on a few levels, with cardboard between them. Otherwise, on arriving from the internal-gear-shaping workstation, they are deposited into small cubbyholes, as shown in picture 15. In this case, where plastic separators are used, 247 pieces fit into one pallet, which has one level of 13 x 19 holes. In both cases, the orientation of the shaft is random.

The cups on the chain conveyor are filled with pieces. Out of the 30 available carriages, 29 are filled. One is always left empty, to separate the machined and unmachined parts. A visual check of each piece is conducted so as to remove any residue or chips that got stuck from the previous manufacturing stage. The same visual check is carried out for the cups. The parts are positioned in the cups with the internal gear upwards. After the machining process has been completed, the oil collected in the internal-gear chambers is drained by the operator, by tilting the pieces before placing them into the drainage gutter, with the internal-gear chamber oriented downwards.

In the next table, the time to machine a whole set is shown, according to the number of pieces. The total manufacturing time does not include the time used to start the process, which includes starting the hobbing machine program, calibration, test run and measurement check for the first piece.

TABLE 5. Manufacturing times

	Series size (pieces)	Manufacturing time/piece (min)	Total manufacturing time (hours)
First part	300	1.5	7.5
Second part	175	2.5	7.3
Third part	100	2.0	3.3

Of course, these values are not always the same. As already mentioned before, the operator usually attends two workstations, so the times he must come to the hobbing workstation to either feed the chain conveyor or to measure the pieces can lengthen the process.

Requirements

When the pallets with the pieces reach the hobbing station, the pieces must always be oriented with the internal gear upwards for the first two parts and downwards for the third one. The arrangement must always be the same, no matter which workstation they are coming from. This way, the cobot can use the same settings, and no amendments or sophisticated programming is needed. The plastic compartments must also be used at the turning centre workstation.

The cups on the chain conveyor must be checked for chips and/or any other kinds of residue. Special care must be taken when writing the cobot program. Because of the cleaning process for the parts, a sloppily written program could result in dropping the pieces.

Proposed workflow using the cobot

The feeding process starts as described in section 6.1.5. The parts are placed into the cups with the internal gear upwards; for the third part, the internal gear is downwards. The cobot grabs the piece from the pallet from above. When the processed part arrives in front of the cobot, the cobot takes it and tilts it to drain the oil out of the internal-gear chamber. After a few seconds, the cobot cleans the piece further, hitting it lightly on the gutter. This way, all the chips fall from the piece. After four-five bumps, the workpiece is placed into the gutter. It next cleans the cup, takes one unmachined piece, cleans it also and places it into the cup. The finished pieces are placed in order into the cubbyholes, making it easy to understand the order in which they came out of the machining process. The order is essential, when the measurements happen for specific workpieces, as first, middle and last manufactured workpiece. So, the feeding process happens piece by piece: the moment a finished part arrives in front of the cobot, it is replaced with an unprocessed one, which is then processed following the aforementioned instructions. This means the manufacturing process runs without breaks. The operator comes to perform a quality check either when a pallet is full or when all the pieces are finished.

Evaluation of changes

The requirement decided upon for the previous phase – the parts' position in the pallets – is the most significant change. Theoretically, the change lies in doing a task, one step ahead. The plastic separators are already used within the company, so the change does not involve any extra cost.

The operator will no longer check the pieces and cups before machining. This task will be transferred to the cobot as well. The cleaning of parts and cups must be translated well into the cobot program, so the task is completed safely and competently. The rest of the workflow does not need any changes.

Risks

The operator from the previous manufacturing stage bears a key role in this new workflow. If he/she makes a mistake in putting the shaft the other way round, with the internal gear downwards, then the process produces faulty pieces. The step of positioning the pieces in the pallets can be developed further to make it impossible for the operator to place them the wrong way so that no mistake can occur.

Another risk is in the material leftovers from the gear cutting. With all the cleaning measures, there is always the possibility of a chip rubbing and scratching the part. Or wrong measurements resulted from the same chip issue. The cobot needs to grasp the piece and bump-clean it at the right angle, so all the residue material falls off. The cobot program must be well written, so there is no risk of the cobot dropping the piece while cleaning it. If a dirty part enters the machining table, the residue interferes into the piece's centre axes, throwing it off balance during the rotational movement when machined.

Benefits

The position of the pieces in the pallets facilitates an easy pick-and-place task. With relatively little workflow changes, the deployment of the cobot for this part is straightforward and quick. The operator is only needed to start the process,

and when a pallet is full of processed parts, to do the quality checks. The risks related to the operator during the running of the hobbing machine are eliminated. The manufacturing time is shortened.

6.2.2 Fourth part

This part is the heaviest on the list; it is 7.4 kg and 415 mm long. It has been included in this analysis because Tasowheel's managers are trying to make the production process more comfortable and smoother. Usually, it is manufactured in sets of 150 pieces. Because of its size, it is challenging for the operator to handle it. As the machine is cutting two gears, as indicated by the two arrows in the following picture, the manufacturing time for one piece is slightly more than 8 minutes.

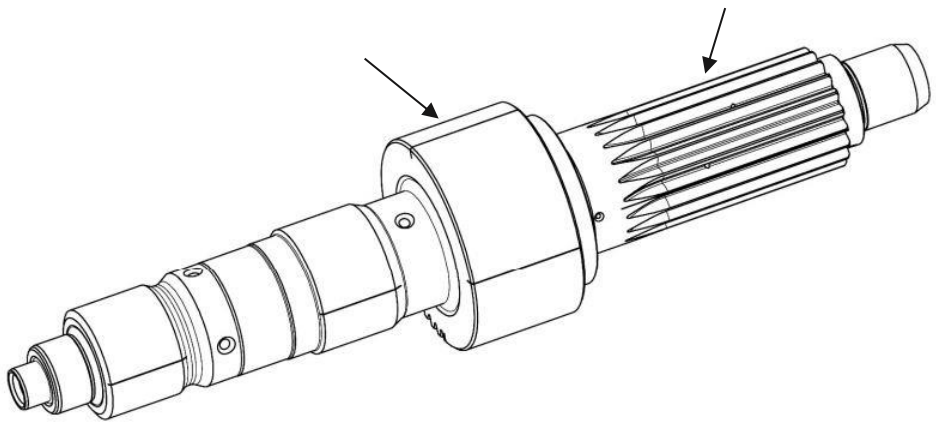

PICTURE 24. Shaft no. 4

Initial workflow

The pieces are placed in a drilled piece of plywood (as seen in picture 25), with the side with longer teeth downwards. After a visual check of the piece and the holding cup, the operator fills the cups on the conveyor belt. The parts must be put into the cups the other way around; that is, with the side with teeth upwards. Usually, the operator goes to put the shafts into the drainage gutter when about

six to eight pieces have been machined. Because of this part's size, the drainage channel fits up to eight pieces at a time. When the next processed batch arrives, the parts from the gutter are moved into the plywood holes in the pallets.

PICTURE 25. Part no. 4 arrangement in the pallet

Analysis

This part is different from the ones analysed so far, as it is bigger and heavier. The premises chosen for the parts in the list cannot be used for this part. The cobot's maximum payload is 10 kg and this piece is 7.4 kg. So the remaining 2.6 kg must be split between the gripper and other hardware components. Furthermore, when the cobot handles such a heavy piece, it must have a firm and secure grip. For that to happen, the item it needs to carry must not be too close to the maximum payload value.

The gripper model used for the previous parts cannot be used. The weight of the shaft exceeds the maximum payload of the gripper, which is 5 kg. There are many gripper models on the market, but not many have been made to fit the Universal Robots models. So a gripper model analysis must be conducted to identify the right gripper model.

For this reason, the cobot cannot be deployed for the manufacturing of this part without significant changes and investments. The pieces are close to each other in the pallets, making it impossible for any gripper to grab them safely around the body. With the present setting, the gripper can take the shaft from the box only by taking hold of it from above. Otherwise, changes in pallet arrangement are needed, either a more significant distance between parts in the plywoods or a different arrangement that can facilitate an around the body grip. The position of the part in the pallets is opposite to the position in the cups. An intermediate step is needed to turn the part round. There is a high risk of the cobot dropping the part. The weight of the part is too close to the maximum the cobot can handle.

It is fair to conclude that this shaft does not qualify for a quick and straightforward cobot deployment, or at least not using the UR10e cobot and the Robotiq gripper. A cobot with higher payload values would do the job successfully, but it is more expensive and it would not be very easy to carry it from one workstation to another.

6.2.3 Fifth part

This part, as seen in picture 26, is manufactured twice a year in batches of around 150 pieces. With its weight of 4.2 kg, this piece is at the gripper's payload limit. The carriages on the chain conveyor are equipped with the plates onto which part is placed, and then it is secured with three bolts.

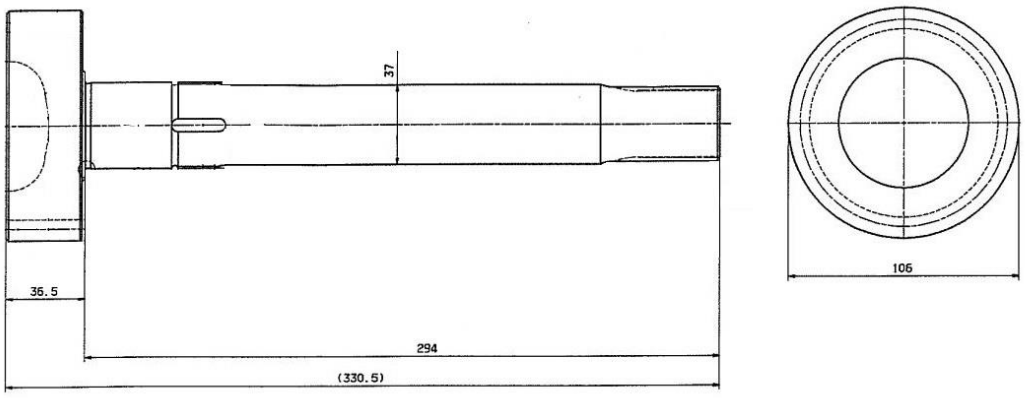

PICTURE 26. Gear shaft

Initial workflow

The pieces arrive at the hobbing machine in pallets in which plastic separators hold them vertically, with the base-like end downwards. This same arrangement is used after the gear hobbing process. In one pallet, there are 60 (6 x 10) compartments. Hence, for a whole set, three pallets are used. With two gear cuts required, one at each end, one shaft is ready in 7 minutes.

The operator checks and cleans both the plate and the piece before he/she mounts it, with the base fixed between the three plate bolts. The centre points of both ends must be checked carefully. If any residue is left there, the fixture of the piece in the machining table will not be perfect, so the shape of the gear would not meet the required quality.

When six to eight parts have been machined, the operator comes and stores them in the drainage channel, in a tilted position. When the next set of finished pieces arrives, he/she transfers the ones from the gutter into the pallets and then the ones from the plates are moved into the drainage channel. This whole process is repeated until all the parts have been manufactured. Inspections and quality checks are done throughout the process.

Requirements

For the cleaning of the plates (explained on page 45), a few rags must be available for the cobot. Due to high payload, the cobot must handle the part carefully. The program must be designed with consideration to the gripper's moves while holding the workpiece.

Proposed workflow using the cobot

The cobot cleans the plate. It then grabs the shaft from above, puts it temporarily onto the plate, grabs it again with a more sturdy grip, and bumps it a couple of times against the plastic wall of the drainage channel. This way, the chips from under the base can fall off. The piece is then placed on the chain conveyor. With a rag, the cobot wipes the centre points on the upper side of the

part. Both ends must be clean and clear of debris. The same cleaning process is followed for the parts that are processed, right before they are put into the drainage gutter. When one pallet is full, the operator comes to do the quality check and to bring the next pallet containing unprocessed parts.

Evaluation of changes

The only change is to the cleaning process. Again, the cobot program plays a significant role in the quality of the cleaning task. This is a good reason for conducting a few tests to understand what movements return a clean surface.

Risks

The sloppy cleaning of the ends of the part can result in a scrap piece. Chips or any residue left between the piece and the fixture can cause the measurements to be wrong. The high payload limits the gripper's moves when holding the part. This aspect must always be kept in view while writing the program.

Benefits

Even with the risk mentioned previously, the cobot checks all the pieces in less time than a human can do it. In this case, the time saving is the most significant and valuable benefit. However, it must not also result in a reduction in the quality. Furthermore, the quality can be maintained or even improved by using a good program.

6.3 Gears

Gears are power transmission components consisting of a toothed wheel attached to a rotating axel. Teeth from the gear match with other components' teeth to transmit torque. Depending on the type of gear system, they can change the speed, torques, or direction of a power source.

6.3.1 Sixth and seventh part

These two gears are grouped in this subsection because they are both relatively new on the production floor, and similar in size. The sixth part was manufactured once last year, and the series of 750 pieces was manufactured over more than four shifts. The seventh part was manufactured twice as a series of 425 pieces that spanned under three shifts. This part's small size and weight facilitates secure handling with low dropping risks. The parts appear on this list because both clients have ordered a few batches more already, and the cobot use would significantly shorten the manufacturing time.

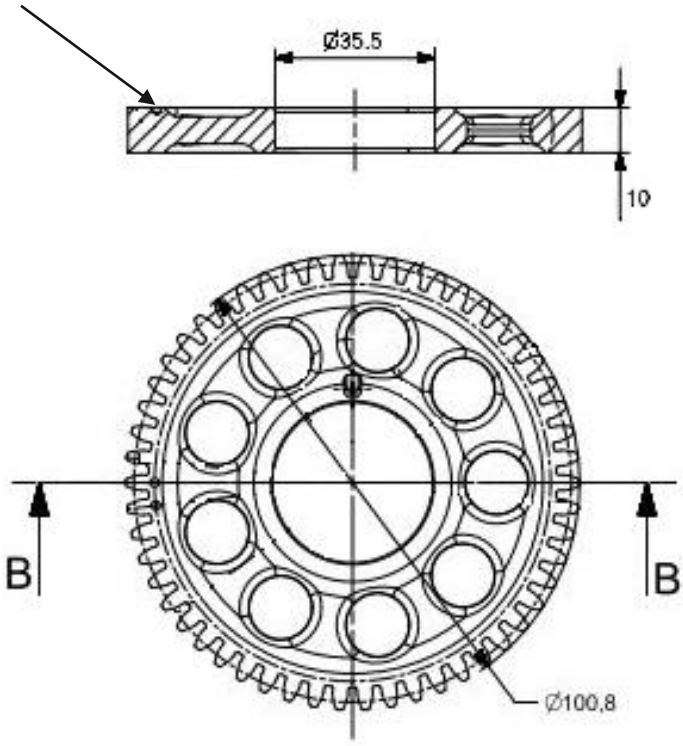

PICTURE 27. Gear no. 1

Picture 27 shows the first gear wheel. The arrow on the left, from the section view, indicates a timing mark. The second gear (as seen in picture 28), also has a timing mark, but it is not represented in the drawing.

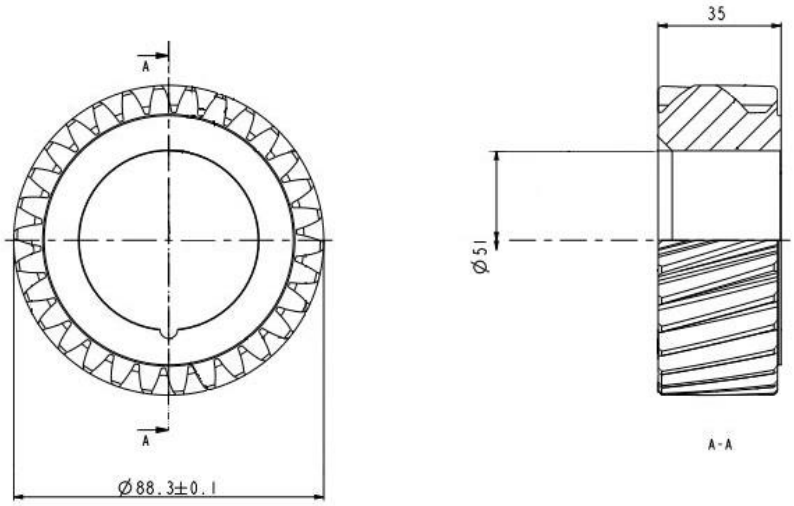

PICTURE 28. Gear no. 2

Initial workflow

Both gear wheels entered Tasowheel's production last year. Being new products, the manufacturing processes are still being calibrated. With all the prototype and test runs, the procedure and workflow can still take small modifications. As mentioned already in the theory part of this thesis, for a safe and successful cobot deployment, the manufacturing process must be well designed and mature. All possible issues must have been addressed with all the possible issues emerging in time. That being said, the proposed workflow has been analysed based on the present situation and on the data that has been gathered so far.

The parts are stored in pallets, in a vertical position, with wooden or plastic separators between the columns, as shown in picture 16, page 38. After the machine has been started, and the first piece created and given a green light, the operator populates the plates with unmachined parts. She/he must pay attention to the orientation of the part on the plate. The part has a small cavity on one face, and that cavity must face the plate's surface.

The finished parts are then checked visually to determine if the timing mark is in the right position in relation to the teeth. There have been cases of bad timing (a few items per batch). This also happens for other products, though seldomly. The issue is still under investigation, though the cause has been found in the

hobbing machine. Next, the parts are placed into the drainage gutter. Both parts have a control plan, so the operator measures if the gear matches the drawings' values, with a measurement density of around 10%.

After the visual check, the parts are stored vertically in the drainage channel. With the narrow profile of the sixth part, the operator must make sure they are well secured and do not fall sideways. When the oil has been drained, the pieces are moved onto pallets, which have the same arrangements as at the beginning of the process.

Requirements

The visual check of the timing marks by the cobot is not a simple task. The small size of the marks – 2mm in diameter – makes it almost impossible for a machine's vision system to work correctly. The only option would be to have the matching shape of the teeth and timing marks created by three-dimensional (3D) printing. This protects the surface of the gear. The printed material is soft and does not scratch the surface of the part when coming into contact. This matching piece would be fixed on the edge of the gutter, and the cobot would rotate the gear wheel till it snaps into place.

Sometimes, at the previous workstation, the operator places the parts horizontally, in many layers separated by cardboard. This practice should be changed so that the parts are always vertical in the pallets. Furthermore, another requirement is to leave around 150 mm of free space between the first part in the row and the pallet wall. This way, the gripper has space to grab the part by the inner diameter.

Proposed workflow using the cobot

The operator brings the pallets to the workstation, starts the hobbing machine and creates the first piece. The operator checks if the first piece matches the drawing, and then starts the cobot program. When taking the piece from the pallet, the gripper's fingers grab it by the inner diameter. The cobot cleans the plate and the piece before fixing it to the plate. When the piece has been processed,

the cobot takes it, cleans it and then stores it in the drainage gutter. Before moving the piece onto the pallet, the cobot checks if the timing marks are in the right place by using the matching shape. When one pallet has been filled with parts, the operator comes to perform the quality check and to bring the next pallet, and the process starts again. As explained before, the cobot stores the parts in the pallet in the same order as they came out of the machining table.

Evaluation of changes

The check of the timing marks is a new task. The matching part should be well designed to ensure a smooth and perfect match. It must be analysed and tested well until it is known that the pieces are being checked correctly, with no false results. The new arrangement of the parts in the pallet, with the space between the first part and the pallet's wall, must be respected by the previous manufacturing phase. This change can result in more pallets used to store a full batch.

Risks

In addition to the risk of material residue being left on the part, the most significant risk for these two parts is the timing-mark check.

Benefits

The universal time-saving benefit will be surpassed if the timing-mark check is designed adequately. This solution will make sure no faulty part leaves the hobbing workstation, and it is more reliable than the visual check conducted by the human operator.

6.3.2 Eighth and ninth part

The last parts on the list are not new to the Tasowheel facility. The two clients have been ordering them regularly for the past few years. The eighth gear is manufactured twice a year, in batches of around 350 pieces. It weighs 1.6 kg, and the outer diameter is 176 mm. The ninth one has a high demand, with

around 18 series being produced a year, with 1,000 pieces in each series. With an outer diameter of 183 mm, it weighs 3.5 kg. Both gears are presented in the below pictures, 29 and 30.

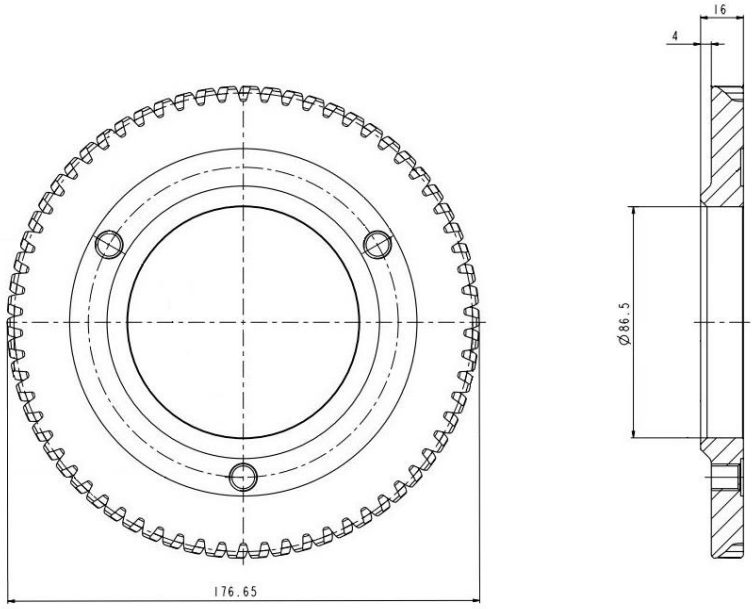

PICTURE 29. Gear no. 3

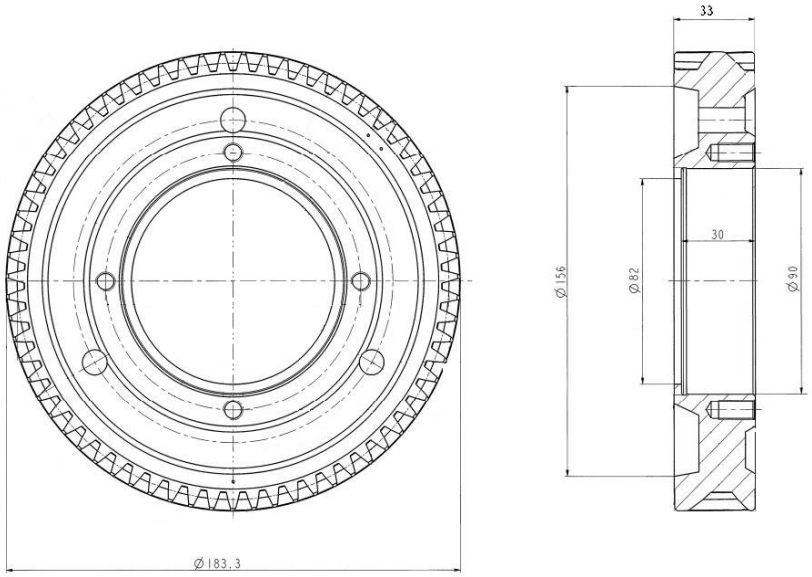

PICTURE 30. Gear no. 4

Initial workflow

Similarly to the previous parts, these gear series are stored in a vertical position in the pallets, in rows separated by wood or plastic strip. For the eighth gear there are 276 pieces in one pallet. For the ninth gear wheel, 110 pieces fit in one pallet. Sometimes, depending on the operator, the gears might be placed on many levels, between cardboard sheets.

After the first manufacturing steps have been completed, the operator takes care of the feeding process, with all the related tasks: cleaning of plates and parts, draining oil, and checking the timing-mark position for the ninth part only. The risk of a bad timing-mark position applies to this part also. After the machining process, the parts are then moved onto pallets, with the same arrangements as at the beginning of the process.

Requirements

These parts have the same requirements as the sixth and seventh parts. Both the timing-mark check and the small rearrangement of the parts in the pallets are necessary for cobot deployment.

Proposed workflow using the cobot

The operator brings the pallets to the workstation, starts the hobbing machine and creates the first piece. The operator checks if the first piece matches the drawing and then starts the cobot program. When taking the piece from the pallet, the gripper's fingers grab it by the inner diameter. The cobot cleans the plate and the piece before fixing it to the plate, following the same cleaning process as for all the parts analysed so far. When the piece has been processed, the cobot takes it, cleans it and then stores it in the drainage gutter. For the ninth part only, before moving the piece onto the pallet, the cobot checks if the timing mark is in the right place, by using the matching shape. When one pallet has been filled with parts, the operator comes to perform the quality check and to bring the next pallet, and the process starts again.

Evaluation of changes

It takes a bit of practice and determination to make the small changes for the timing-mark check and the rearrangement of the parts within the pallets, but they are necessary. The rearrangements might cause further changes, as more pallets will be needed in which to pack all the pieces, so more storage space is required for the pallets inside the production facility.

Risks

The risks that emerged from the operating changes are from residue material on the parts causing the same issue as described previously and a faulty timing-mark check. A faulty timing-mark would make the part unsuitable, basically a scrap.

Benefits

Improvements in the processing time and quality are the most important benefits. With a well-calibrated timing mark check, Tasowheel is assured it will not send faulty parts to the clients.

7 CONCLUSIONS

The purpose of this thesis was to clarify whether a cobot deployment is an advisable solution for making the hobbing workstation more efficient. If the existing workflow of nine parts is suitable for cobot handling, and if the emerged changes can be put into practice. The identified need to decrease production costs at the hobbing workstation without affecting the quality of the manufactured product was borne in mind throughout the research and writing of this thesis.

The research phase provided a better understanding of collaborative robotics. It clarified that safety measures must be imposed and that the cobot cannot work in free space without pre-set boundaries. Companies that market and sell these types of cobot can mislead clients by highlighting the lack of need for a caging system around the workstation where the cobot works. Indeed, the standards do not require a caging system, but other safety measures must be put into place. A third party – the integrator – can design and implement a cobot solution.

The nine parts that this thesis has analysed are those that either are manufactured regularly or have just landed on the production floor, but come in fairly large batches. The main issue in all cases is the time wasted during the feeding process. The hobbing machine itself is automated, as it takes the unprocessed part inside, to the machining table, machines it and then takes it out; then the cycle is repeated. A clutch takes the part from a chain conveyor, and, after the part has been manufactured, it puts it back on the carriage on the conveyor. The human operator is the one who handles the feeding process for the chain conveyor. The practice is that the operator has two workstations to attend to, so there are many moments when one of the machines waits for new pieces. If the feeding process is performed by a cobot, the human operator is freed from the hobbing workstation, and can even attend to three or more workstations.

This analysis shows that out of all of the nine parts manufactured at the hobbing workstation, only one requires a more challenging cobot deployment. Its shape,

size, and present arrangements do not fit the conditions imposed; that is, a light cobot model for swift docking and undocking at different workstations, and small changes at the workstation.

In the next table, the manufacturing times are presented for each part. In the case of a clean run, where the hobbing machine is working properly, the time elapsed from the beginning of the process until all the parts are finished is the best possible time. All the “dead moments” are eliminated, and the manufacturing process is more efficient than for prior cobot use.

TABLE 6. Deployment evaluation

Part No.	Pieces/batch	Time/piece (min)	Time used for the entire batch (hours)	Cobot deployment evaluation
1	300	1.5	7.5	+++
2	175	2.5	7.3	+++
3	100	2.0	3.3	+++
4	150	8.2	20.5	+
5	150	7.0	17.5	+++
6	750	2.1	26.3	++
7	425	3.0	21.3	++
8	350	1.8	10.5	+++
9	1,000	3.0	50.0	+++

The last column in table 6 is an estimation of how feasible a cobot deployment is for each part within the given circumstances. The changes and risks have also been taken into account. The explanations of the symbols used are as follows:

A cobot deployment can happen (+++), with a high success rate expected. However, there are changes in workflow or around the hobbing machine. Timing mark check can be a turning point. The task of cleaning the parts and plates/cups needs close attention.

A cobot deployment will bring some changes (++), with significant risks that must be carefully analysed and addressed. The first issue in these cases is the somewhat undeveloped, early manufacturing process. As stated before, a successful cobot deployment precondition is a mature and steady manufacturing process. For a mature process, a couple of batches are not enough to discover all the possible and probable issues. Again, the timing mark check can make the difference. Rearrangements of the parts in the pallet is another change, but a relatively easy to implement one.

A cobot deployment is impossible (+) in the given circumstances. Besides some changes at the workstation, neither the model of the cobot (UR10e) not the gripper (Robotiq 2F-85) are not the right ones. So this case must be analysed under different premises.

One finding of this thesis is the variable habit of storing the parts in the pallet. Apparently, there is no trouble in having more than one arrangement style in the pallets, for the same product. In fact, one can save time, knowing things are always made in the same manner. The data offered by this thesis also brought to light that UR10e cobot model is not the right model for all the parts. If Tasowheel wants only one cobot, for all the processed parts at the hobbing machine, then another model must be chosen.

This thesis has opened the door for this automation project. The results speak for themselves: a cobot deployment is a right answer for the identified need. The cobot can replace the human operator for the conveyor feeding process task. Next, this automation project can advance into the next phase: choosing the right cobot model.

REFERENCES

A brief history of collaborative robots. 2019. Robotic Industries Association. Read 31.1.2020.
https://www.robotics.org/blog-article.cfm/A-Brief-History-of-Collaborative-Robots/142

Adaptive robotic gripper 2-finger (85&140) instruction manual. Robotiq. Released 2012. Revision of 2018. Robotiq.

Advanced Production Quality Planning (APQP) and Control Plan. Reference Manual. 2008. Second edition. Chrysler Corporation. Ford Motor Company, and General Motors Corporation.

Batchelor, B. 2012. Machine Vision Handbook. Springer.

Bouchard, S. n.d. Lean Robotics: A guide to making your robots week in your factory. Ebook.

Chiao, M. 2019. The collaborative robot market – 2019. Read 31.1.2020.
https://www.interactanalysis.com/the-collaborative-robot-market-2019-infographic/

Chui, M. George, K. Manyika, J. Miremadi, M. 2017. Human Machines: A new era of automation in manufacturing. Read 31.1.2020.
https://www.mckinsey.com/business-functions/operations/our-insights/human-plus-machine-a-new-era-of-automation-in-manufacturing#

Collaborative Robots: Preparing a future for human-to-robot interaction. 2019. Future Market Insights. Read 6.2.2020.
https://www.futuremarketinsights.com/reports/collaborative-robot-market

Direct Industry. N.d. Choosing the right Cobot. Read 9.3.2020.
http://guide.directindustry.com/choosing-the-right-cobot/

EPAL Euro Pallet. N.d. Read 9.3.2020.
https://www.epal-pallets.org/eu-en/load-carriers/epal-euro-pallet

Excellence is our top priority. n.d.Tasowheel Gears Oy. Read 23.1.2020.
https://www.tasowheel.fi/tasowheel-gears/

Glaser, A. 2009. Industrial Robotics. How to implement the right system for your plant. New York: Industrial Press, Inc.

Gupta, A. K. Arora, S. K. Westcott, J. R. 2017. Industrial Automation and Robotics. Dulles: Mercury Learning and Information.

History of cobots by Jeff Chapman. 2017. Cobots guide. Youtube video. Published 20.4.2017. Seen 31.1.2020.
https://www.youtube.com/watch?v=CrkE7lkghyQ&feature=youtu.be

Hobbing machines LC 200-500. n.d. Liebherr brochure. Read 24.1.2020.

In motion since 1979. Tasowheel Group Oy. Read 23.1.2020.
https://www.tasowheel.fi/tasowheel-group/#section_one

International Federation of Robotics. Top Trends Robotics 2020. Read 28.2.2020.
https://ifr.org/ifr-press-releases/news/top-trends-robotics-2020

ISO/TS 15066. 2016. Robots and robotic devices – Collaborative robots. Read 20.2.2020. Student version.

Klocke, F. 2011. Manufacturing Processes 1. Cutting. Springer.

Meet the cobots. 2017. Cobots Guide. Read 7.2.2020.
https://cobotsguide.com/cobots/#charts

Meet the e-Series Family. 2020. Read 13.2.2020.
https://www.universal-robots.com/e-series/

Module Gear Cutter Hobbing Tools. n.d. Alibaba.com.
https://cqxinwang.en.alibaba.com/product/741945323-210627772/Module_Gear_Cutter_Hobbing_Tools_with_PA20_PA14_5.html

Mäkinen, O. Perä, O. Pienisaari, J. Piki, E. Porras, T. 2020. Specifications for transportable machine tending robot. Project work. Tampere University.

Product catalog, EUR-pallets. N.d. Read 9.3.2020.
https://www.kruizinga.com/pallet+stacking+frames/hingeable+construction+stackable/172-a/new/99-172-a/

Ray, M. N. 2019. Why was the robotic arm invented? Interesting Engineering. Read 15.2.2020.
https://interestingengineering.com/why-was-the-robotic-arm-invented

Replacement of Conventional Gear Hobbing Machine Center to CNC Gear Hobbing Machine Center. 2010. Bangalore Machine Tool Cluster. New Delhi.

Robotiq. FT 300 Force Torque Sensor. Instruction manual. Released 2014. Revision of 2018. Read 20.2.2020.

Robotiq. Wrist camera vision system for CB-series Universal Robots. Instruction manual. Released in 2016. Revision of 2018. Read 20.2.2020.

SFS-EN ISO 10218-1. 2011. Robots and robotic devices. Safety requirements for industrial robots. Part 1: Robots (ISO 10218-1:2011). Student version.

SFS-EN ISO 10218-2. 2011. Robots and robotic devices. Safety requirements for industrial robots. Part 2: Robot systems and implementation. Student version.

Striving for excellence. n.d. Tasowheel Gears Oy. Read 24.1.2020.
https://www.tasowheel.fi/tasowheel-gears/production/

The collaborative robot market will exceed US$11 Billion by 2030. 2019. ABI Research. Read 31.1.2020.
https://www.abiresearch.com/press/collaborative-robot-market-will-exceed-us11-billion-2030-representing-29-total-industrial-robot-market/

Unimate: The first industrial robot n.d. A tribute to Josef Engelberger. Read 15.2.2020.
https://www.robotics.org/joseph-engelberger/unimate.cfm

Universal Robots continue to dominate cobot market but faces many challenges. 2018. Interact Analysis. Read 6.2.2020.
https://www.interactanalysis.com/universal-robots/

Vasilis, D. n.d. Gear Manufacturing.
http://dml.chania.teicrete.gr/ereuna/gear5_en.html

APPENDICES

Appendix 1. Liebherr LC300 Technical Data (Liebherr brochure - modified. n.d., 5)

		LC 300
Max. workpiece diameter	mm	300
Max. nominal module	mm	7/12
Workpiece weight	kg	100
Max. workpiece length (manual loading)	mm	680 (1,200)
Max. hob slide travel (axial travel)	mm	600
Table diameter	mm	250
Table speed	min^{-1}	100/200/400
Drive power of table	kW	5.56/11.8/15.0
Centre distance hob/work table	min. mm max. mm	15 400
Hob head swivel angle	Degrees	± 35/45
Hob arbor main bearing		Cylindrial,
Max. shift travel	mm	200/300
Max. hob diameter	mm	160/220
Max. hob length	mm	230/330
Max. Hob speeds	min^{-1}	500/750/1,
Driving power hob spindle	kW	14/27
Weight of machine with tailstock column	ca. kg	16,000
Total connected load	ca. kVA	35-50

Appendix 2. Cobot Comparison Charts

1(2)

From Cobots Guide 2017:

Cobot Comparison Chart

SORTED BY PAYLOAD	PAYLOAD	REACH	DOF (# OF AXIS)	WEIGHT	REPEATABILITY
DENSO: COBOTTA	500 g	310 mm	6 axis	3.8 kg	n/a
ABB: YUMI	500 g	500 mm	7 axis	38 kg	0.02 mm
AUTOMATA: EVA	750 g	n/a	6 axis	2.3 kg	n/a
KAWADA: NEXTAGE	1.5 kg (each arm)	n/a	6-axis (+2 for neck, +1 for waist)	29 kg	+/- 0.5 mm
KINOVA: MICO2	2.1 kg	700 mm	6 axis	4.6 kg	n/a
RETHINK: BAXTER	2.2 kg	1210 mm	7 axis	75 kg	n/a
KINOVA: JACO2	2.6 kg	900 mm	6 axis	4.4 kg	n/a
UNIVERSAL ROBOTS: UR3	3 kg	500 mm	6 axis	11 kg / 24.3 lbs	0.1 mm to 0.0039
F&P: P-ROB 2R	3 kg	775 mm	6 axis	20 kg	+/- 0.1 mm
FRANKA EMIKA	3 kg	800 mm	7 axis	18.5 kg	+/- 0.1 mm
RETHINK: SAWYER	4 kg	1260 mm	7 axis	19 kg	+/- 0.1 mm
AUBO: OUR-1	5 kg	850 mm	6 axis (4-7*)	15 kg	+/- 0.05 mm
UNIVERSAL ROBOTS: UR5	5 kg	850 mm	6 axis	18.4 kg	0.1 mm to 0.0039

(continues)

STÄUBLI: TX2-60L	5 kg	920 mm	6 axis	52.5 kg	+/- 0.03 mm
PRODUCTIVE ROBOTICS: OB7	5 kg	1000 mm	7 axis	24 kg	+/- 0.1 mm
TECHMAN: TM5	6 kg	700 mm	6 axis	21 kg	+/- 0.1 mm
KUKA: LBR IIWA 7	7 kg	800 mm	7 axis	22.3 kg	+/- .01 mm
STÄUBLI: TX2-60	9 kg	670 mm	6 axis	51.4 kg	+/- 0.02 mm
UNIVERSAL ROBOTS: UR10	10 kg	1300 mm	6 axis	28.9 kg / 63.7 lbs	0.1 mm to 0.0039
MABI: SPEEDY 10	10 kg	1384.5 mm	6 axis	28 kg	n/a
KUKA: LBR IIWA 14	14 kg	820 mm	7 axis	29.9 kg	+/- 0.01 mm
FANUC: CR-35IA	35 kg	1813 mm	6 axis	990 kg	+/- 0.08 mm

From Direct Industry – Choosing the right Cobot. n.d.

Cobot	Characteristics	Applications
YuMi (ABB)	• Two articulated and padded arms for smooth interaction • Flexible hands • Sensors that allow the cobot to discern its environment • A camera to map its environment and detect human operators	• Assembling small parts in the electronics sector
CR series (FANUC)	• Depending on the series, these cobots can lift between 4 kg and 35 kg • Integrated anti-pinch protection • Soft rubber skin	• The smaller cobots (4 kg) are useful for lighter manual work in confined spaces and can also be mounted on the wall or ceiling • The larger ones (35 kg) can be used for tasks involving heavy loads and for machine maintenance and palletizing applications.
LBR (KUKA)	• Load from 3 kg to 14 kg • Torque sensors integrated on each axis • It can be used by simply guiding it by hand and/or using a tablet with a graphic interface • All you have to do is touch the cobot with your hand and it stops	• It is specially designed for assembly tasks in the electronics sector • Palletizing • Order picking
Panda (Franka Emika)	• Highly sensitive and versatile cobots • Torque sensors integrated on the seven axes • The cheapest cobots on the market (less than €10,000)	• Quality control tasks (chips, touch screens) • Packaging tasks (box filling and closing)
UR series (Universal Robots)	• 3 types of 6-axis articulated cobots, load from 3 kg to 10 kg • Are small and light enough to be installed on a desk • Many options are available: torque sensors, "sensitive" skin, etc.	• Assembly • Injection mold operations • Quality inspection • Pick and place • Gluing, welding • Tests • Packaging
SIA series (Yaskawa Motoman)	• 7-axis articulated arm • Torque sensors on all axes allow the robot to adapt to its environment	• Mounting • Inspection • Machine logistics • Handling

Appendix 3. UR10e – Technical details (Meet the e-Series Family 2020)

UR10e technical details

Specifications

Payload	10 kg (22 lbs)
Reach	1300 mm (51.2 in)
Degrees of freedom	6 rotating joints
Programming	12 inch touchscreen with polyscope graphical user interface

Performance

Power, Consumption, Maximum Average	615 W	
Power, Consumption, Typical with moderate operating settings (approximate)	350 W	
Safety	17 configurable safety functions	
Certifications	EN ISO 13849-1, PLd Category 3, and EN ISO 10218-1	
Force Sensing, Tool Flange	Force, x-y-z	Torque, x-y-z
Range	100.0 N	10.0 Nm
Precision	5.0 N	0.2 Nm
Accuracy	5.5 N	0.5 Nm

Movement

Pose Repeatability per ISO 9283	± 0.05 mm	
Axis movement	Working range	Maximum speed
Base	± 360°	± 120°/s
Shoulder	± 360°	± 120°/s
Elbow	± 360°	± 180°/s
Wrist 1	± 360°	± 180°/s
Wrist 2	± 360°	± 180°/s
Wrist 3	± 360°	± 180°/s
Typical TCP speed	1 m/s (39.4 in/s)	

Features

IP classification	IP54
ISO 14644-1 Class Cleanroom	5
Noise	Less than 65 dB(A)
Robot mounting	Any Orientation
I/O ports	
Digital in	2
Digital out	2
Analog in	2
Tool I/O Power Supply Voltage	12/24 V
Tool I/O Power Supply	2 A (Dual pin) 1 A (Single pin)

Physical

Footprint	Ø 190 mm
Materials	Aluminium, Plastic, Steel
Tool (end-effector) connector type	M8 | M8 8-pin
Cable length robot arm	6 m (236 in)
Weight including cable	33.5 kg (73.9 lbs)
Operating Temperature Range	0-50°C
Humidity	90%RH (non-condensing)

Control box

Features

IP classification	IP44
ISO 14644-1 Class Cleanroom	6
Operating Temperature Range	0-50°C
I/O ports	
Digital in	16
Digital out	16
Analog in	2
Analog out	2
Quadrature Digital Inputs	4
I/O power supply	24V 2A
Communication	500 Hz Control frequency Modbus TCP PROFINET Ethernet/IP USB 2.0, USB 3.0
Power source	100-240VAC, 47-440Hz
Humidity	90%RH (non-condensing)

Physical

Control box size (WxHxD)	475 mm x 423 mm x 268 mm (18,7 in x 16,7 in x 10,6 in)
Weight	12 kg (26.5 lbs)
Materials	Powder Coated Steel

Teach pendant

Features

IP classification	IP54
Humidity	90%RH (non-condensing)
Display resolution	1280 x 800 pixeles

Physical

Materials	Plastic, PP
Weight including 1m of TP cable	1,6 kg (3,5 lbs)
Cable length	4,5 m (177,17 in)

UNIVERSAL ROBOTS

universal-robots.com

Appendix 4. Robotiq 2F-85 specifications (Adaptive robot gripper… 2016, 105)

Specifications :

Specification	2-FINGER 85	
	Metric units	Imperial Units
Gripper Opening (see Figure 6.1.1)	85 mm	3.35 in
Minimum diameter for encompassing	43 mm	1.69 in
Maximum height	162.8 mm	6.4 in
Maximum width	148.6 mm	5.85 in
Weight	850 g	1.9 lbs
Grip force	Maximum force calculation below	
Finger speed	20 to 150 mm/s	0.8 to 5.9 in/s
Position repeatability [1]	0.05 mm	0.002 in
Force repeatability	+/- 10%	
Position resolution [2]	0.4 mm	0.016 in
Grip force resolution	Maximum force calculation below	