SAVONIA

THESIS - BACHELOR'S DEGREE PROGRAMME
TECHNOLOGY, COMMUNICATION AND TRANSPORT

COMMISSIONING PROJECT OF SOLIDWORKS 3D MODELING SOFTWARE

Author/s: Eetu Pulliainen

SAVONIA-AMMATTIKORKEAKOULU

OPINNÄYTETYÖ
Tiivistelmä

Koulutusala Tekniikan ja liikenteen ala	
Tutkinto-ohjelma Energiatekniikan tutkinto-ohjelma	
Työn tekijä(t) Eetu Pulliainen	
Työn nimi SolidWorks 3D-mallinnusohjelman käyttöönottoprojekti	
Päiväys 12.05.2020	Sivumäärä/Liitteet 27/1
Toimeksiantaja/Yhteistyökumppani(t) Sumitomo SHI FW Energia Oy	

Tiivistelmä

Sumitomo SHI FW Energia Oy aloitti SolidWorks 3D-mallinnusohjelman käytön yksityiskohtien mallinnusta varten vuonna 2017.

Tämän opinnäytetyön tavoitteena oli jatkaa ohjelmiston käyttöönottoa, sillä ohjelman käyttöönotto oli vielä monilta osin kesken. Puutteellisiin osa-alueisiin kuului mm. osa-, kokoonpano- ja sekä piirrustusten pohjatiedostojen asetusten määrittäminen. Materiaalikirjasto oli määritetty puutteellisesti, sillä materiaalien lujuudet tuli määritellä materiaalikohtaisilla lämpötilaredusoiduilla arvoilla.

Opinnäytetyöhön sisältyi myös yleisen mallinnusohjeen luominen, jotta yrityksen sisäiset mallinnukseen liittyvät tavat ja käytännöt saataisiin yhtenäistettyä. Mallinnusohjeessa opastetaan mallin nimeämiskäytännöt, oikean tiedostorakenteen käyttö, malliominaisuuksien määrittely, yleiset hyvät mallinnusperiaatteet, mallien yksinkertaistaminen sekä mallin asettelu ja koordinaattijärjestelmä PDMS-vientiä varten.

Työn tuloksena yritykselle saatiin käyttöön uudet SolidWorks pohjatiedostot, johon oli määritetty tarvittavat ominaisuudet valmistusta ja osaluettelon täyttöä varten. SolidWorksin materiaalikirjastolla tehtyjen testien avulla saatiin myös selville tarvittavat jatkotoimenpiteet kirjaston kehittämiselle.

Opinnäytetyön tuloksena luotu mallinnusopas valmistui katselmointia varten, jonka jälkeen opas tulee siirtymään yrityksen sisäiseen jakeluun.

Avainsanat
SolidWorks, malli, mallinnusopas, SolidWorks asetukset

SAVONIA UNIVERSITY OF APPLIED SCIENCES

THESIS
Abstract

Field of Study Technology, Communication and Transport			
Degree Programme Degree Programme in Energy Engineering			
Author(s) Eetu Pulliainen			
Title of Thesis Commissioning Project of SolidWorks 3D Modeling Software			
Date	12 May 2020	Pages/Appendices	27/1
Supervisor(s) Seppo Ryynänen, Teija Honkanen			
Client Organization /Partners Sumitomo SHI FW Energia Oy			

Abstract

Sumitomo SHI FW Energia Oy began using SolidWorks 3D modeling software for detail modeling in 2017.

The aim of this thesis was to continue the commissioning of the software, as there were multiple tasks related to the commissioning that had yet to be completed. These tasks included defining the contents of template files used by SolidWorks for parts, assemblies and drawings. Additionally, the material library materials had to be modified in order to add material specific strength reduction factors for higher temperatures.

A general guide for modeling also had to be created in order to unify modeling practices across the company. The guide covers model naming, folder structure, attribute specification, general good modeling practices, model simplification, model positioning and coordinate system for PDMS export.

As a result of the work done in this thesis, a set of new SolidWorks template files with the desired attributes for manufacturing and filling the bill of materials were created for the company. The tests done with the SolidWorks material library were useful for determining the next steps for improvement of the library itself.

The modeling guide created as a part of this thesis was completed for review, after which the guide will be published for distribution within the company.

Keywords
SolidWorks, model, modeling guide, SolidWorks configuration

CONTENTS

1 INTRODUCTION 5
2 COMPANY PRESENTATION 6
2.1 BOILER DESIGN DEPARTMENT 7
3 BOILER DESIGN MODELING SOFTWARE 8
3.1 AVEVA PDMS 8
3.2 Dassault Systèmes SolidWorks 10
3.3 SolidWorks versions and Product Data Management 11
3.4 SolidWorks Simulation tools 12
4 SOLIDWORKS CONFIGURATION 12
4.1 General overview 12
4.2 Templates and custom properties 14
4.2.1 Drawing template 16
5 MATERIAL LIBRARY 17
6 MODELING GUIDE 20
6.1 Coordinate system and positioning for PDMS 22
6.2 Model definition practices 23
7 CONCLUSIONS 24
REFERENCES AND SELF-PRODUCED MATERIALS 25
APPENDIX 1: 26

GLOSSARY

3D	Three dimensional
CAD	Computer Aided Design
CAE	Computer Aided Engineering
FEA	Finite Element Analysis
Mate	SolidWorks assembly feature for adding relations between parts
PDMS	Plant Design Management System, CAD software used for plant layout from AVEVA
PDM	Product data management, Dassault Systèmes software for managing SolidWorks files
BOM	Bill of materials
Sketch	Sketches can be used for multiple tasks within SolidWorks but are mainly used to define extrusions
UI	User Interface

1 INTRODUCTION

The company had already begun using SolidWorks a few years before work on this thesis began. However, while the software was already in use, a huge amount of small details regarding the use of the software, and its settings had yet to be defined. Because of this, it was decided during the first few briefing meetings to narrow down the tasks that would be done to fit within the timeframe allotted for this thesis.

The work done was divided into two main components, which form most of the topics covered in this thesis.

One of these main components was general SolidWorks settings, the focus of which was the bill of materials within the drawings. Populating the bill of materials in a unified manner required the creation of various attributes within the part and assembly templates. These attributes could then be used to create a bill of materials template, which has the desired attributes appear automatically according to the values inputted within the part itself. The material library remains incomplete or incorrect regarding many of the materials and the material properties do not scale according to temperature.

The second of the main components was the creation of a general modeling guide, which defines the manner that parts are to be named and the way attributes are to be expressed. Additionally, the guide provides general principles for creating models that can be feasibly exported into other 3D modeling software, such as PDMS, or 3D presentation software such as Navisworks.

Exporting models made in SolidWorks can reduce unnecessary work considerably, as the detail models made in SolidWorks can be potentially used for updating layout models. This kind of use, however, requires that the model is built in a way that has separate features which may be simplified away. Models imported into PDMS cannot contain too much geometry, as bringing too much unnecessary geometry into plant layout models can render them practically unusable.

This kind of simplification also creates special considerations on how to use mates within assemblies which may be simplified for export.

2 COMPANY PRESENTATION

Sumitomo SHI FW Energia Oy has its roots in the A. Ahlström Oy workshops that had a long history of making various types of boilers. Originally the company had its main focus on ship boilers. Eventually Ahlström expanded into the energy sector in the 1950s by building boilers for industrial use by utilizing know-how gained from building boilers for ships. (Jääskeläinen and Lovio, 23.)

In the early 1960s, the workshop began making BFB boilers which used industrial waste and sludge for fuel. Interest in this technology increased due to stricter environmental legislation and because of this an R&D laboratory was set up, which eventually in the 1970s developed the more economical and environmentally friendly CFB technology, originally branded as Pyroflow. (Jääskeläinen and Lovio, 23.)

Ahlström's own company factories working in various industrial sectors were the first customers to utilize this new boiler technology. On the same year as the first orders were made, other parties such as municipalities began to show interest in the technology which ordered them for district heating use. (Jääskeläinen and Lovio, 23-24.)

International interest in the technology was also increasing, which led to the joint-venture company Pyropower Inc. in the United States, founded by Ahlström, Gulf and Shell companies in the 1980s. Pyropower Inc delivered the first boiler in 1983 to a Gulf Oil plant in California. (Jääskeläinen and Lovio, 24.)

Due to the advantages of CFB technology, namely lower nitrogen oxide and sulfur dioxide emissions as well as the ability to combust challenging fuels more easily, Ahlström received numerous environmental rewards during the 1980s in the United States. During this time Ahlström itself also expanded their energy sector business from boiler production to complete power plant delivery. (Jääskeläinen and Lovio, 24.)

In the year 1990, the 90th Pyroflow boiler was ordered and the Ahlström boiler production division had a 40% share of the market. (Jääskeläinen and Lovio, 24.)

In 1995, the company sold Pyropower to Foster Wheeler due to the risks the company management saw in the energy sector, namely in the case of Ahlström their relative obscurity in the sector. The company management was also concerned of the technological risks of new boiler technology development i.e. budget overruns when developing new technologies or technologies that in the long run turn out to be not commercially viable. The high capital, project-based nature of the energy sector was also seen negatively, as it made predicting the company's business difficult and profitability varied greatly. After the acquisition by Foster Wheeler, Pyropower was renamed Foster Wheeler Energia Oy. (Jääskeläinen and Lovio, 40.)

In 2014 AMEC and Foster Wheeler merged into AMEC Foster Wheeler. Consequently, Foster Wheeler Energia Oy became AMEC Foster Wheeler Energia Oy.

The year 2017 brings us to the current ownership of the company. Sumitomo Heavy Industries Ltd. acquired AMEC Foster Wheeler Energia Oy in June of 2017 and the name of the company was changed into Sumitomo SHI FW Energia Oy.

Sumitomo Heavy Industries Ltd. operates in various manufacturing fields, including heavy machinery, shipbuilding, mass-production machinery, environmental equipment and construction machinery. Sumitomo Heavy Industries also produces equipment for semiconductor and laser technologies. (Sumitomo Heavy Industries, Ltd.)

The current Sumitomo SHI FW Energia Oy operates globally in the energy sector, offering everything from full plant delivery to modernization and maintenance services. The company has a world market share of approximately 50% of CFB boilers and employs 440 people in Finland.

Compared to many of its competitors, the company has a wider product portfolio and capability to deliver larger, more powerful boilers, such as the four 550 MWe supercritical boilers delivered to South Korea in Samcheok. (Sumitomo SHI FW.)

Recently, the company has also expanded its business into the energy storage business by partnering with Highview power, a British company specializing in liquified air energy storage, also known as LAES.

2.1 BOILER DESIGN DEPARTMENT

Boiler Design is a part of the Engineering – Finland department of Sumitomo SHI FW Energia Oy.

The Boiler Design department employs 25 people and consists of the materials and manufacturing team, the pressure part design team, the piping design team and the ducting and non-pressure part design team.

The layout team's primary task is the creation of the PDMS layout model, including all the tasks related to it such as fixing the power and/or boiler plant general layout, documenting the applied technical layout solutions, ensuring boiler plant feasibility from a technical and layout perspective, identifying interfaces.

The pressure parts, piping and non-pressure parts teams continue with the basic and detail design in their own respective areas once the layout team has finished with layout design.

The materials and manufacturing team's primary task is consulting designers in matters of forming, welding, workability and processability. The department has a metallurgical research lab at their disposal under the materials and manufacturing team.

The main tools used by Boiler Design are AutoCAD, Tekla, PDMS and more recently SolidWorks.

3 BOILER DESIGN MODELING SOFTWARE

3.1 AVEVA PDMS

Plant Design Management System is a venerable 3D CAD software released by AVEVA in 1974.

Compared to SolidWorks, PDMS is much older and functions in a fundamentally different manner using databases as illustrated in Figure 1 below. These databases can contain vast amounts of information and enables easy cooperation between a team of engineers, as individual engineers can work on their own respective areas, save their work and update the larger plant model being worked on.

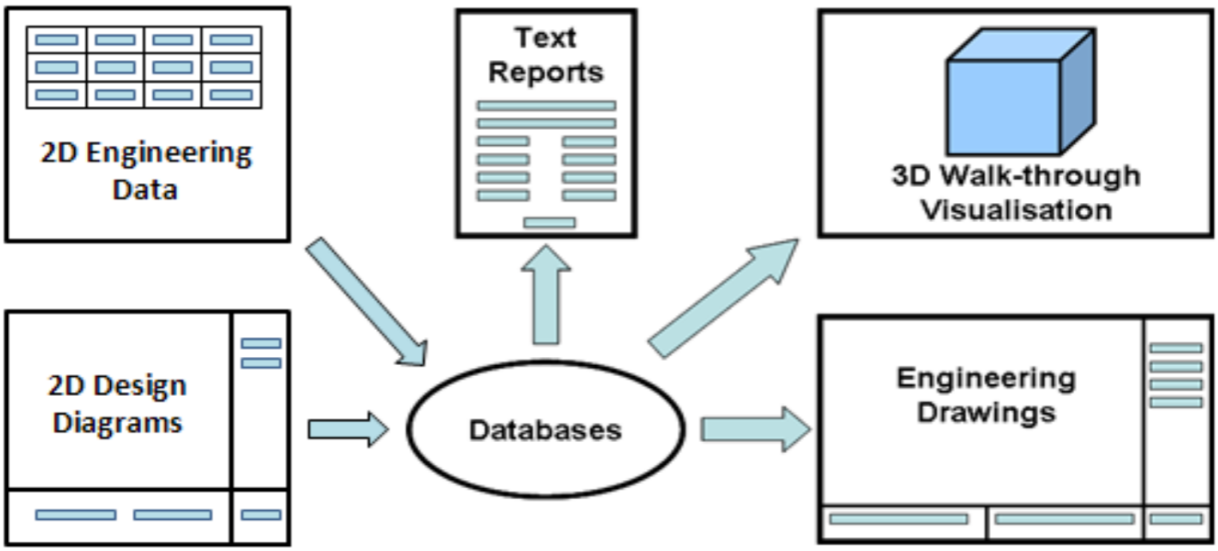

Figure 1. PDMS database system. (Ryynänen, Seppo. 2019).

The larger 3D plant model created with PDMS serves as the foundation of all projects and is an important source of information for engineering teams involved in a project.

The UI of PDMS is built around modules, of which most important regarding this thesis is the Design module. The Design module is used for creating plant equipment, laying pipes, structures and various other needed 3D shapes.

Unlike the sketch and feature based SolidWorks, plant components in PDMS are based on primitives, such as a box or a cylinder, which can be combined to create more complex shapes, such as vessels or pumps. Because of this fundamental difference, many aspects of detail modeling are difficult, if not impossible within PDMS compared to SolidWorks.

Another characteristic trait of PDMS is the hierarchical system shown below in figure 2, which facilitates multi-discipline teamwork.

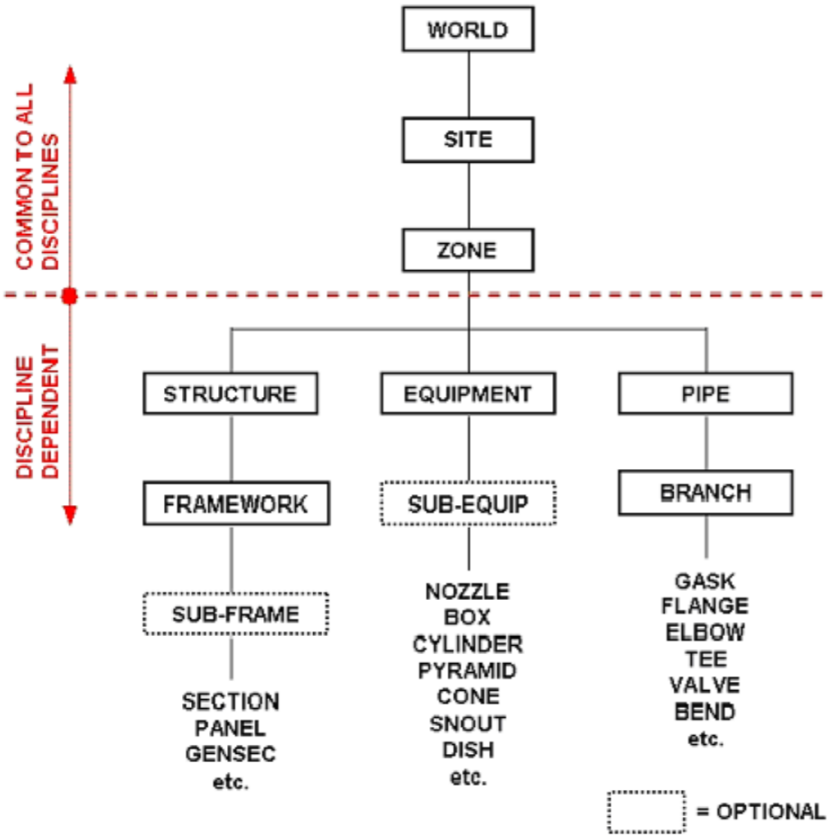

Figure 2. PDMS Design module hierarchy system. (Ryynänen, Seppo. 2019).

In this hierarchical system every database element, apart from WORLD, is a part of another element, such as an individual flange being a part of a branch, which in turn is a part of a pipe. (Ryynänen, Seppo 2019.)

Various more modern 3D modeling software, such as SolidWorks, offer the possibility of exporting detail models to PDMS.

3.2 Dassault Systèmes SolidWorks

SolidWorks is a feature-based 3D modeling CAD program developed for mechanical design. The program has tools for modeling parts and assemblies as well as modeling surfaces and creating shell elements out of 3D models. SolidWorks also automatically produces drawings, bill of materials, part numberings, volume and mass calculations. (Dassault Systèmes.)

When using SolidWorks, the user creates sketches in order to define the geometry of features such as extrusions as shown in figure 3 below.

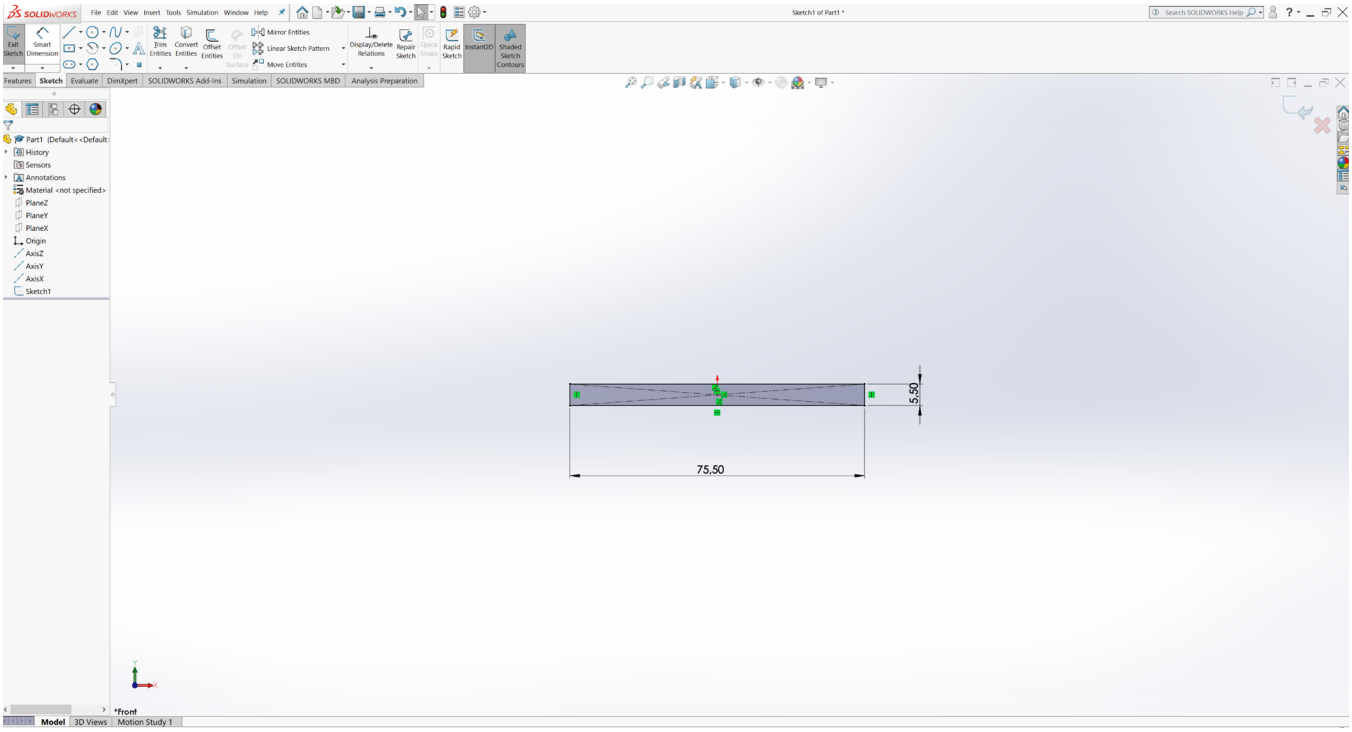

Figure 3. SolidWorks user interface. A sketch with defining dimensions.

These sketches provide a simple and easy to understand way for adjusting the size and geometry of a part within SolidWorks. They can also be used for creating various details within the first extrusion; however, this may not always be desirable as in some cases having a separate feature can be advantageous.

Not all features within SolidWorks are created with sketches. Many features can be defined using a previously created feature, such as chamfers or patterns, as illustrated in figure 4 below. Once again, however, this may result in errors within the model in some cases if more significant changes are made.

Modeling techniques and different example cases are covered in chapter 6 and the modeling guide related to this thesis is covered in more detail there as well. (Sumitomo SHI FW Energia Oy)

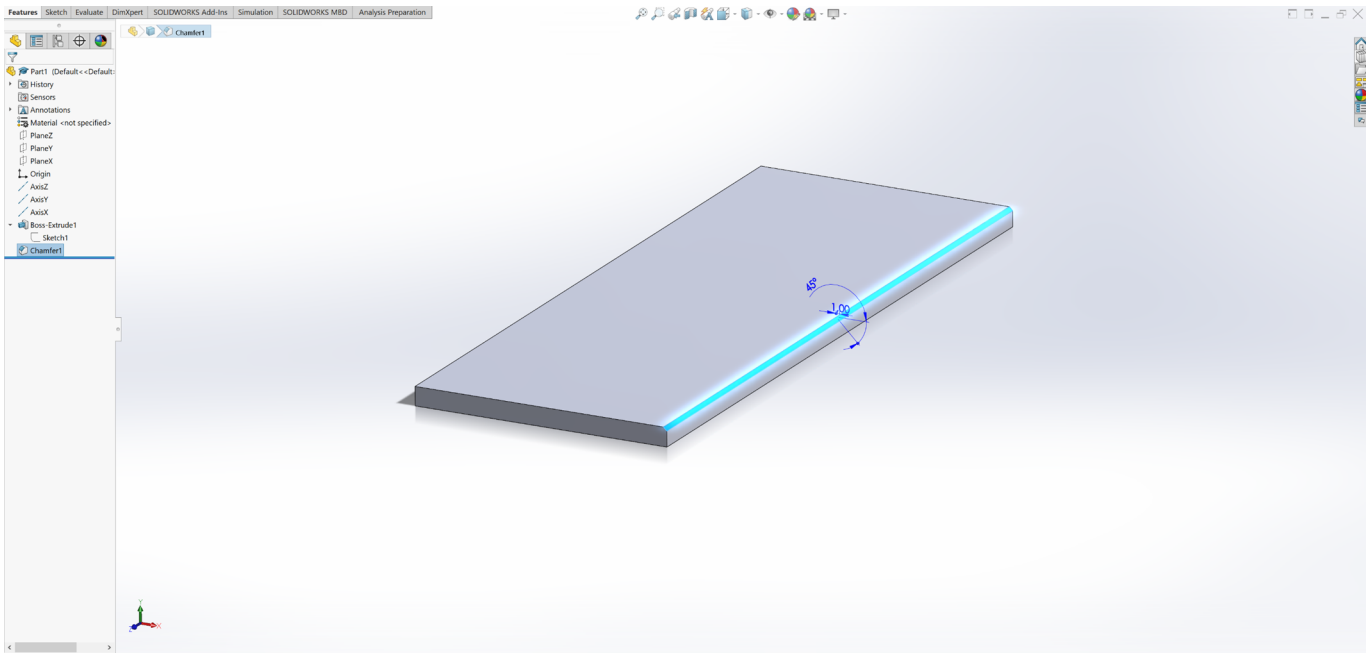

Figure 4. A plate created by an extrusion using the sketch in Fig. 3 with a chamfer in the corner defined by the corner of the extrusion.

3.3 SolidWorks versions and Product Data Management

SolidWorks is available in multiple different versions: SolidWorks Standard, SolidWorks Professional and SolidWorks Premium.

SolidWorks Standard is the most basic version of SolidWorks. The version offers a first-pass analysis tool for basic stress analysis on parts, which can be used to determine the effects of force and pressure on the part. (Dassault Systèmes.)

The Professional edition offers various additional tools. The most significant additional tool is Product Data Management, also known as PDM, which enables individual users and workgroups to manage project data, control design revisions and control access to files. PDM is integrated into Windows Explorer for ease of use. (Dassault Systèmes.)

SolidWorks Premium has additional tools for CAE, such as a simple version SolidWorks Simulation add-in, which uses FEA methods to discretize design components into solid, shell or beam elements and uses linear stress analysis to determine the response of parts and assemblies. (Dassault Systèmes.)

More advanced features are available in various versions of SolidWorks simulation tools, which will be discussed in the next chapter.

3.4 SolidWorks Simulation tools

SolidWorks also has multiple simulation tools, which are tiered into multiple versions.

Simulation Standard adds fatigue analysis for products that experience repetitive stress cycles and for which a regular static stress analysis may not be representative of real-world behavior. (CADWORKS.)

Simulation Professional adds vibration and buckling calculation, which are critical for designing slender or thin structures. The license also includes pressure vessel calculation on a linearized tension curve from multiple different studies. (CADWORKS.)

Simulation Premium is the most advanced version of the add-in, which includes non-linear structural analysis tools, which enables studying materials which behave in a non-linear fashion or studying the behavior of steel structures after the yield strength has been exceeded and the material starts to experience non-plastic deformation. (CADWORKS.)

Another notable add-in of SolidWorks is Flow Simulation, which can be used to simulate the flow of liquids and gasses in 3D models, taking in account the effects of temperature and changes of pressure. This enables designers to detect possible flaws and problem areas in products in the design phase before producing prototypes. The results of flow analysis studies can be exported into the SolidWorks Simulation add-in as starting values for structural analysis. (CADWORKS.)

4 SOLIDWORKS CONFIGURATION

4.1 General overview

Before work began on configuring SolidWorks to suit the company's needs, the various tasks to be completed were listed in a kick-off meeting. During the meeting it quickly became apparent that in order to fit within the time allotted within this thesis, many of the tasks had to be postponed for later and attention should be focused on the most urgent tasks.

Among the more urgent tasks were simple things such as unit precision, a precision of 1 decimal was deemed adequate for the use of the company. Another simple task was renaming the default planes within the part and assembly templates to PlaneZ, PlaneY and PlaneX, according to the practice already adhered to by the parent company, Sumitomo Heavy Industries Ltd.

The parent company's templates also used three axes, named AxisZ, AxisY and AxisX, which are perpendicular to their respective planes as shown in Figure 5. These axes are useful for specifying an axis to revolve around for features that require a defining axis, such as revolves or circular patterns. An axis can also be used for defining a direction for features such as extrusions or linear patterns.

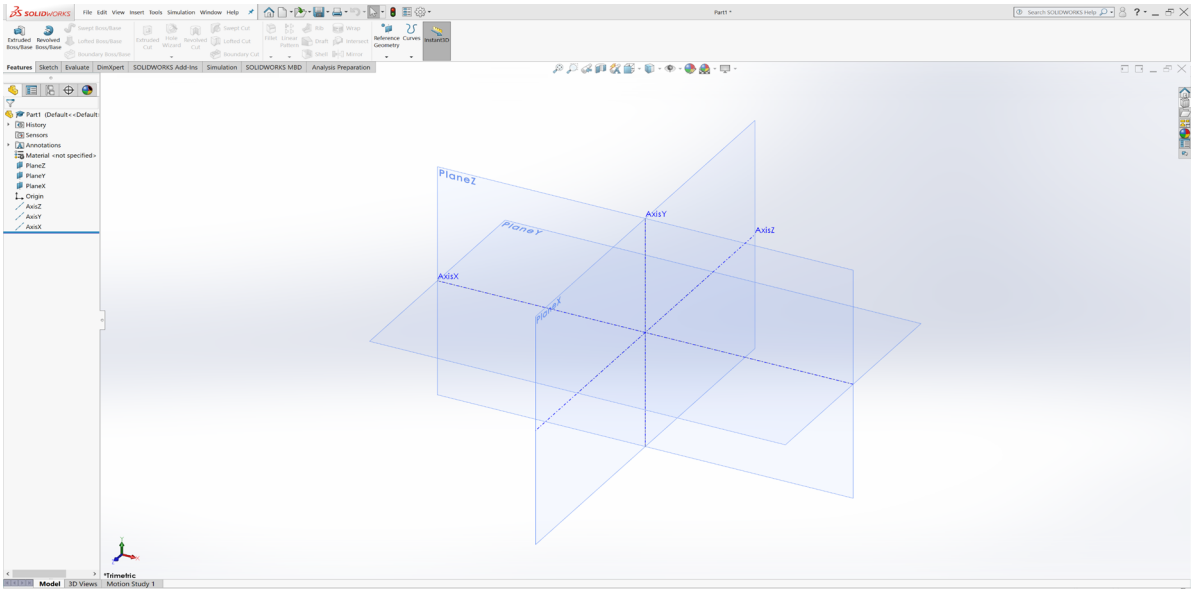

Figure 5. Company part template, axes and planes visible.

Using planes and axes in general for feature definition is a part of good modeling practices, as using parts of features, such as the edges of an extrusion may cause problems if the geometry of the extrusion changes or the extrusion itself is deleted.

A more complex task related to the templates themselves was defining attributes within the custom properties. These properties are used to automatically fill the custom bill of materials in drawings.

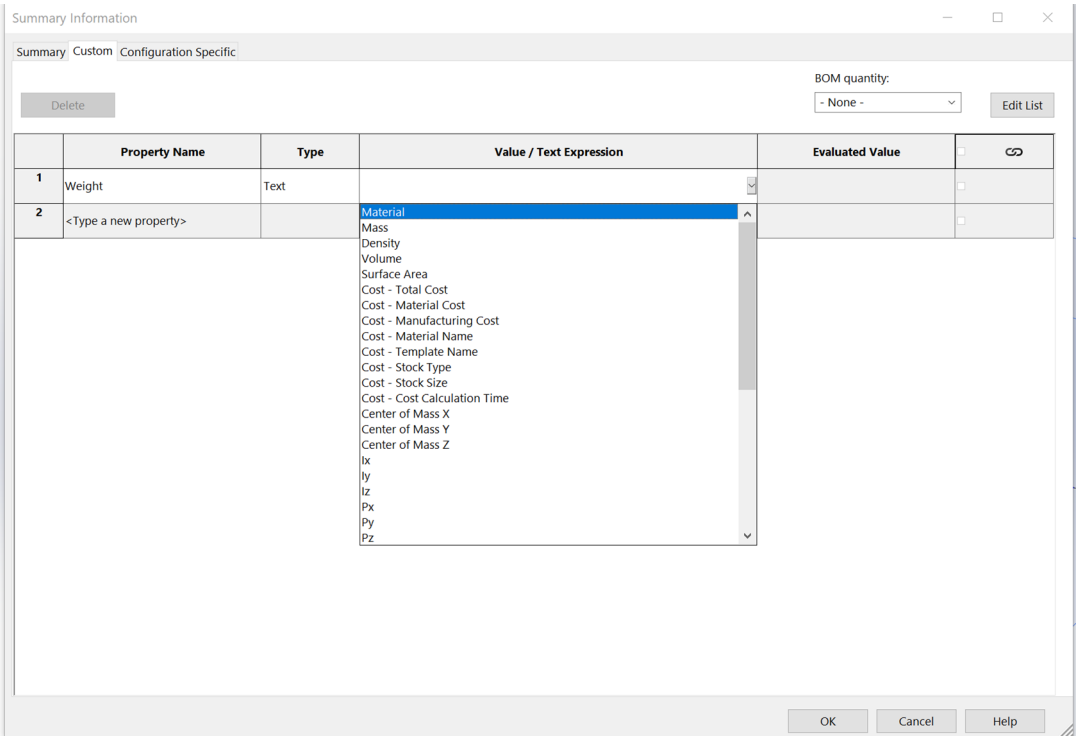

Figure 6. Custom properties window.

As shown in figure 6 above, SolidWorks offers various key properties to be defined directly from a drop-down menu, such as material or mass, material being automatically propagated from the selected material of the part and mass being calculated automatically by volume and density.

The automatic length detection using the axis property was tested for the purposes of this thesis. However, it was deemed too simplistic and prone to error, as it had issues calculating the correct length for even the simplest of forms, such as a long box or tube.

A new bill of materials template had to be created in order to use the new custom properties in drawings, as the default SolidWorks BOM template only has automatic functions for part numbering, part quantity and weight calculation. An automatic BOM in conjunction with linked properties in part and assembly templates will reduce the amount of repetitive, clerical work considerably. Using this method, only the part and assembly attributes must be filled, which will automatically propagate to the BOM within drawings.

A new project was also beginning during the work done in this thesis, which required new drawing templates with custom, semi-automatic title blocks.

The main goal of these tasks is to reduce the amount of repetitive definition of models using a template when creating new parts, assemblies or drawings.

4.2 Templates and custom properties

During the kick-off meeting, the needed custom properties were debated and it was also discussed how to use them. The new bill of materials template shown in figure 7 was also defined during this meeting, as not all the custom properties needed to be displayed on the drawing.

The properties selected to be displayed on the drawings were ones that are mostly used by manufacturing and handling, i.e. transportation and lifting. SolidWorks automatically fills in the part number, quantity and weight columns. The values may also be overridden, as may be necessary with the quantity column when managing parts that sometimes occur in larger numbers than is practical to fully model, such as nuts, bolts, refractory studs, etc.

NO	Description	Dimensions	Material	Qty	Weight / Pcs	Remarks
1	Tube	OD44,5 x 1050 x 5,5t	13CrMo4-5	1	12.8	

Figure 7. The new bill of materials, information propagated from model properties into drawing.

Figure 8 shows the custom properties window, which contains all the properties that were used for populating the bill of materials. The description column is intended to give a general description of the form of the model, i.e. tube, plate, round bar, casting, etc. The column is not intended to be a detailed description of the part, as that function is served by the file name itself.

The dimensions column must have all dimensions manually designated from the part sketch. The order in which the dimensions are given, and any prefixes or suffixes depend on the type of part being defined. The modeling guide instructs the correct way to express dimensions for each type of part. (Sumitomo SHI FW Energia Oy)

The material information comes from the model automatically according to the selected material.

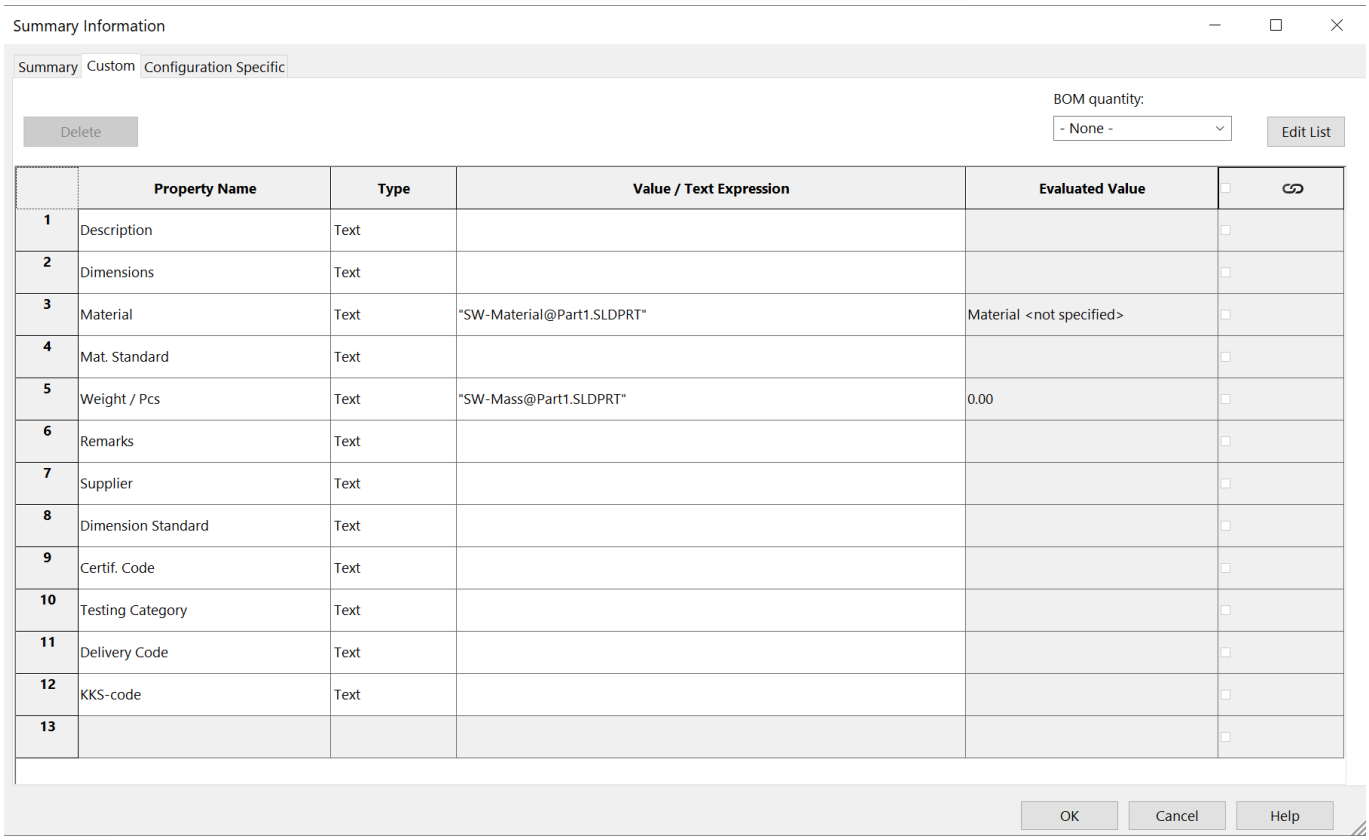

	Property Name	Type	Value / Text Expression	Evaluated Value
1	Description	Text		
2	Dimensions	Text		
3	Material	Text	"SW-Material@Part1.SLDPRT"	Material <not specified>
4	Mat. Standard	Text		
5	Weight / Pcs	Text	"SW-Mass@Part1.SLDPRT"	0.00
6	Remarks	Text		
7	Supplier	Text		
8	Dimension Standard	Text		
9	Certif. Code	Text		
10	Testing Category	Text		
11	Delivery Code	Text		
12	KKS-code	Text		
13				

Figure 8. Custom properties window with the new properties.

The other custom properties are used for additional information for manufacturing, procurement or cost estimation.

In the testing phase of the custom properties, it was discovered that SolidWorks lacks the tools to export directly from the custom properties window within the model itself without coding a macro. Therefore, a second, larger bill of materials template was created in order to circumvent this limitation. The larger bill of materials is impractical to use directly on drawings due to its size; however, it can be saved as an excel file once placed on a drawing.

During testing of the custom properties, it also became apparent that the material standard could not be automatically propagated by selecting a material, as that would require coding a macro. It was first thought that there would be some way to specify the material standard automatically according to the selected material's folder, either by simply some sort of command or at least pointing out manually the folder of the material being used. Due to the limitations of SolidWorks, the material standard remained a manually inputted property.

A series of drop-down menus were considered and created for the description, certification code and testing category attributes for ease of use. However, the drop-down menus would require either coding a macro or the use of an additional template file created by the SolidWorks property tab builder, which can be used for creating more advanced attributes with drop-down menus or radio buttons. Distributing a separate template file was deemed unnecessary for such a minor feature.

4.2.1 Drawing template

The Vuosaari bioheat project was commissioned to the company during the work done in this thesis and because of this, a new drawing template was needed. The easiest way to create a company-wide distributed drawing template was to use custom properties within the drawing template to fill the various cells within the title block.

SolidWorks has two distinct files within drawings, the sheet format file, which typically contains the title block, drawing borders and any possible additional revision blocks. The other layer is the sheet level, which contains the model and all related annotations.

The title block shown in figure 9 was created using the regular sketch tools on the sheet format level. Next, text boxes were created and positioned within the cells of the title block and the correct drawing custom properties were linked to the boxes. Creating the block in this manner allows the designer to simply fill in the information in the custom properties window of the drawing, which contains all the properties. Once filled, the text within the properties will appear in the correct position and font within the title block.

The "weight/paino" cell in figure 9 is the only one that derives its value from the model on the drawing, the rest of the cells are derived from the drawing's own custom properties.

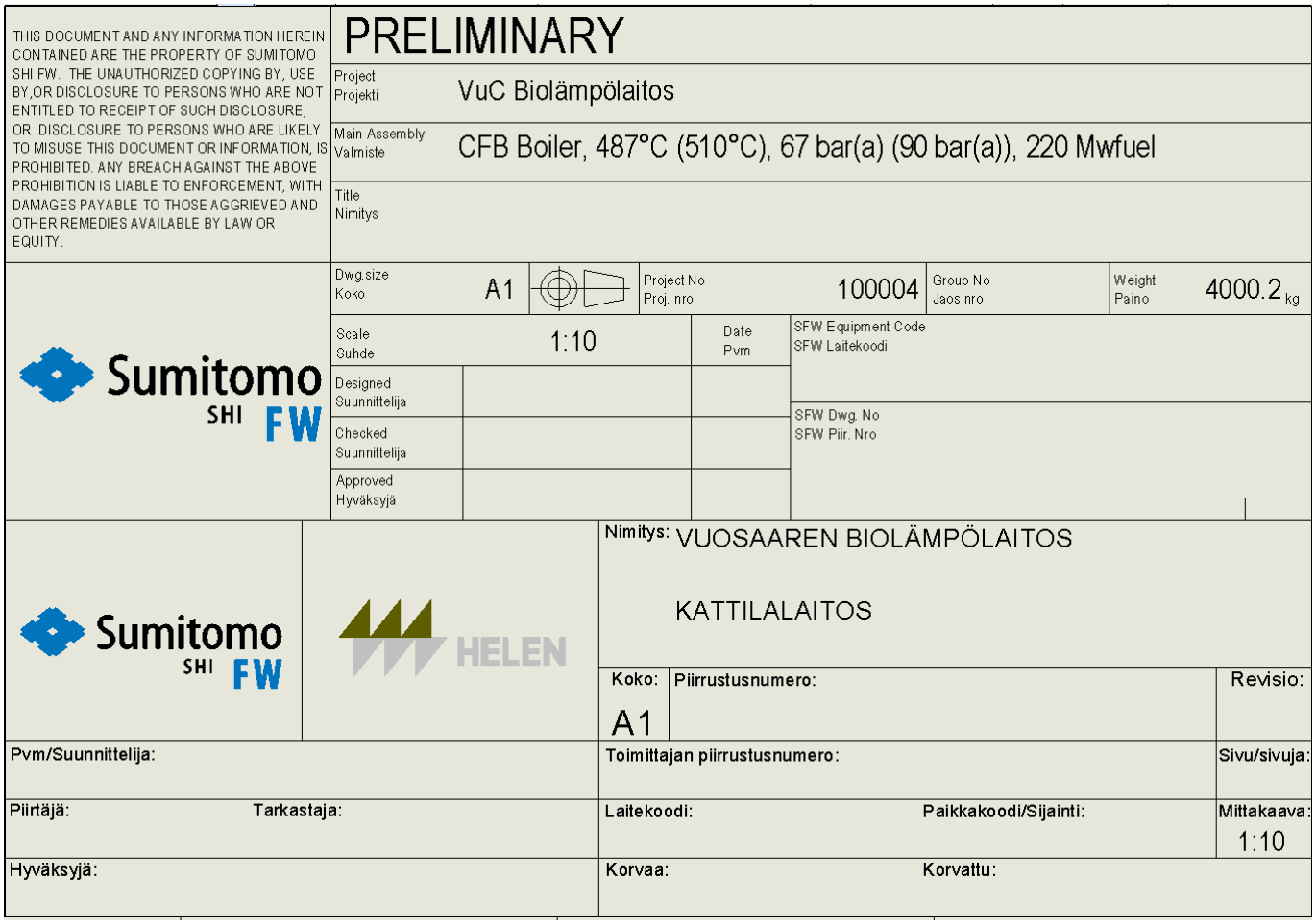

Figure 9. Vuosaari drawing template title block.

5 MATERIAL LIBRARY

The company's SolidWorks material library was incomplete, and although the extent of the work done within this thesis regarding the material library was rather limited, some experimentation was done which will prove helpful for further work with the library.

In its current state shown in figure 10, the library has all the necessary materials by name. However, all the information within the materials themselves is the same, in other words, they are copies of one another besides the name. Manually inputting static values was determined to be insufficient for the needs of the company, as there was an investigation running concurrently with this thesis about the possibility of replacing some, if not all, structural analysis done with Ansys with the tools offered by the more advanced editions of SolidWorks simulation.

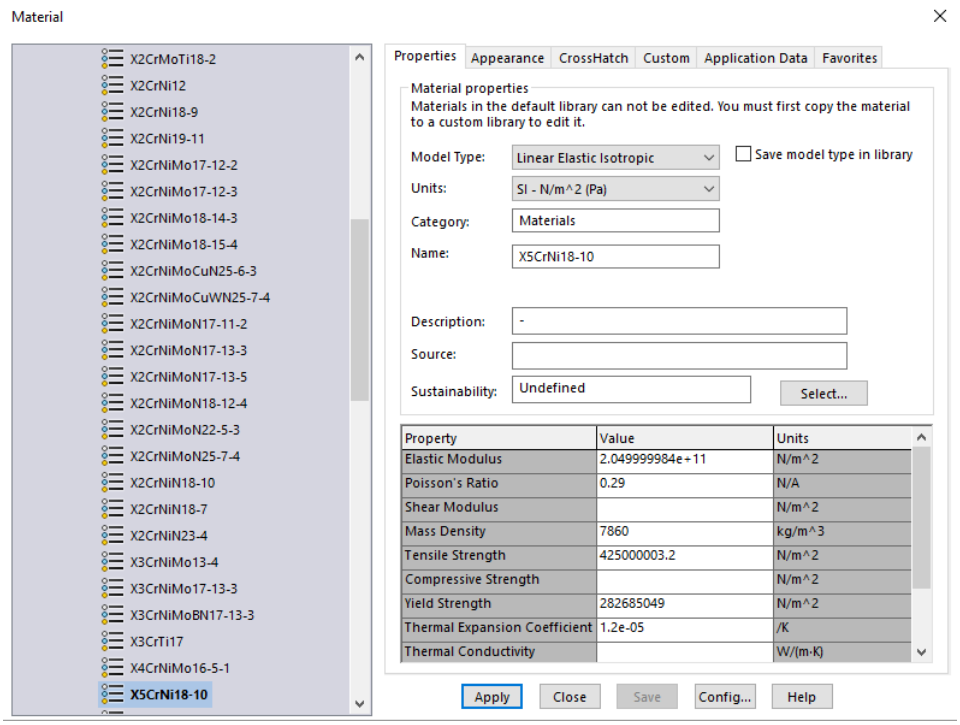

Figure 10. Company material library within SolidWorks.

In order to make the material library useful for future structural simulation analysis, the material properties must be configured to be temperature dependent. SolidWorks simulation offers tools which allow the creation of property vs temperature curves, for example temperature vs yield strength according to data points.

The company uses a program called Spec.NET for assisting structural engineering. Using an add-in, Microsoft Excel can be used to export Spec.NET data from its library. Figure 11 shows the format in which data is exported from the program.

	A	B	C
1	10	ruling thickness	
2	P355GH	material	
3	EN 10028-2:2009	material standard	
4			
5	temperature	Rp02t	
6	20	355	
7	50	343	
8	100	323	
9	150	299	
10	200	275	
11	250	252	
12	300	232	
13			
14			
15			
16			

Figure 11. Example of an excel sheet that derives data from spec.net library through an add-on.

An unfortunate limitation that was discovered within SolidWorks when testing the importation of a file that contained data from Spec.NET. SolidWorks will only accept files that contain two rows of data, whereas excel files which derive their data from the Spec.NET library cannot be only two rows of numerical data due to the requirement of cells which specify the ruling thickness, material and standard.

Due to this limitation, a substantial amount of clerical work will be required to complete the material library, as data points must be manually inputted in order to create temperature vs property curves within the library. However, as typical of SolidWorks, coding a macro for this task is also possible.

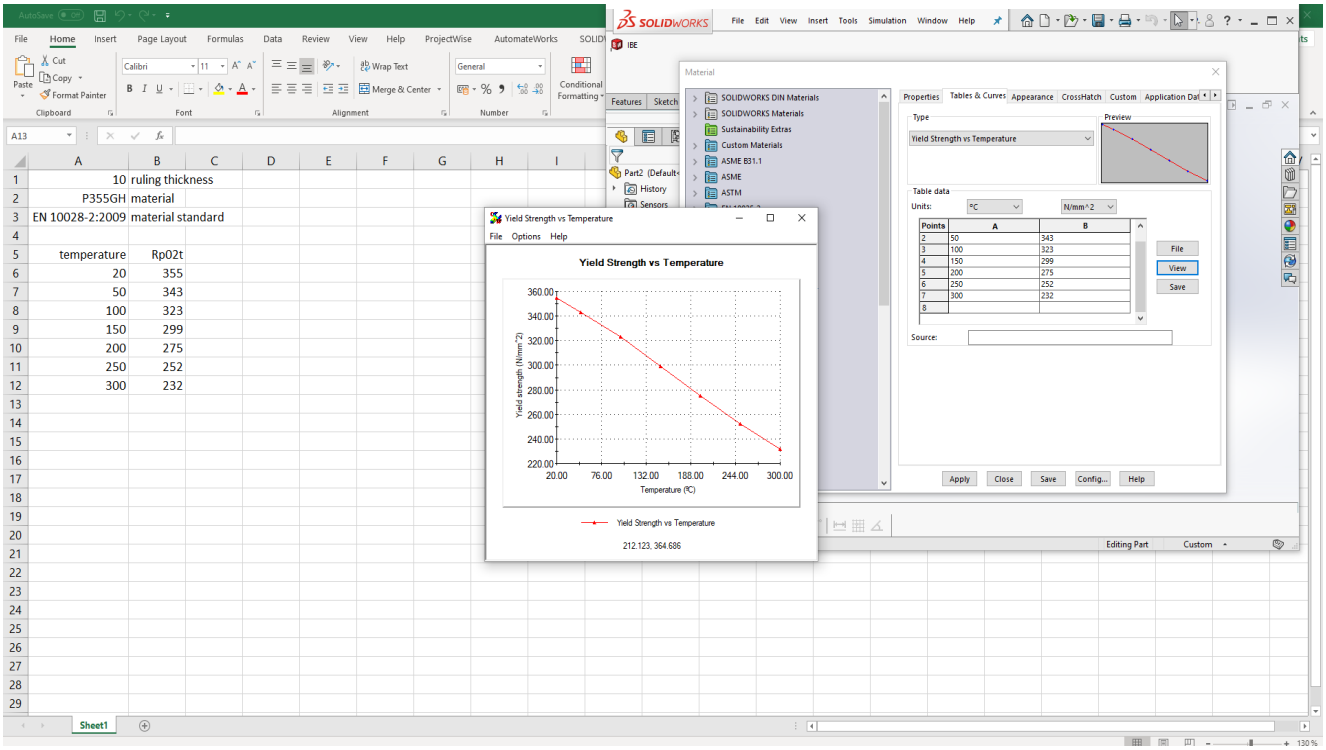

Figure 12. A simple Yield Strength vs Temperature curve created by manual input with values from Spec.NET.

Figure 12 above shows a basic 7 point manually inputted curve. Further research and inquiries are required to determine how many points are sufficiently accurate and which of the other properties require temperature dependent curves.

6 MODELING GUIDE

Good modeling practices are important for creating models that are easy to modify or export into other software. What constitutes as good modeling practices may vary from company to company and according to use case but there are certain practices that apply regardless of what is desired from the model being created.

The SolidWorks modeling guide created as a part of this thesis provides very general tips on how to create models that can be easily simplified and exported. The guide also contains company principles which must be adhered to when creating models.

A simple example of good modeling practice is modeling a tube as a solid rod with the first extrusion, then create a second extruded cut to create a tube from the rod. The reason why modeling a tube should be done in this manner is because the second extruded cut is a separate feature, which may be suppressed away. Suppressing away extraneous features, such as the inside of a tube that contains a large amount of geometry can be extremely useful in cases where there are thousands of tubes in a model, such as a tubular air preheater. Figure 13 illustrates the usual way of modeling a simple tube, which may be satisfactory for some cases, but removes the option of reducing geometry easily by suppressing a feature.

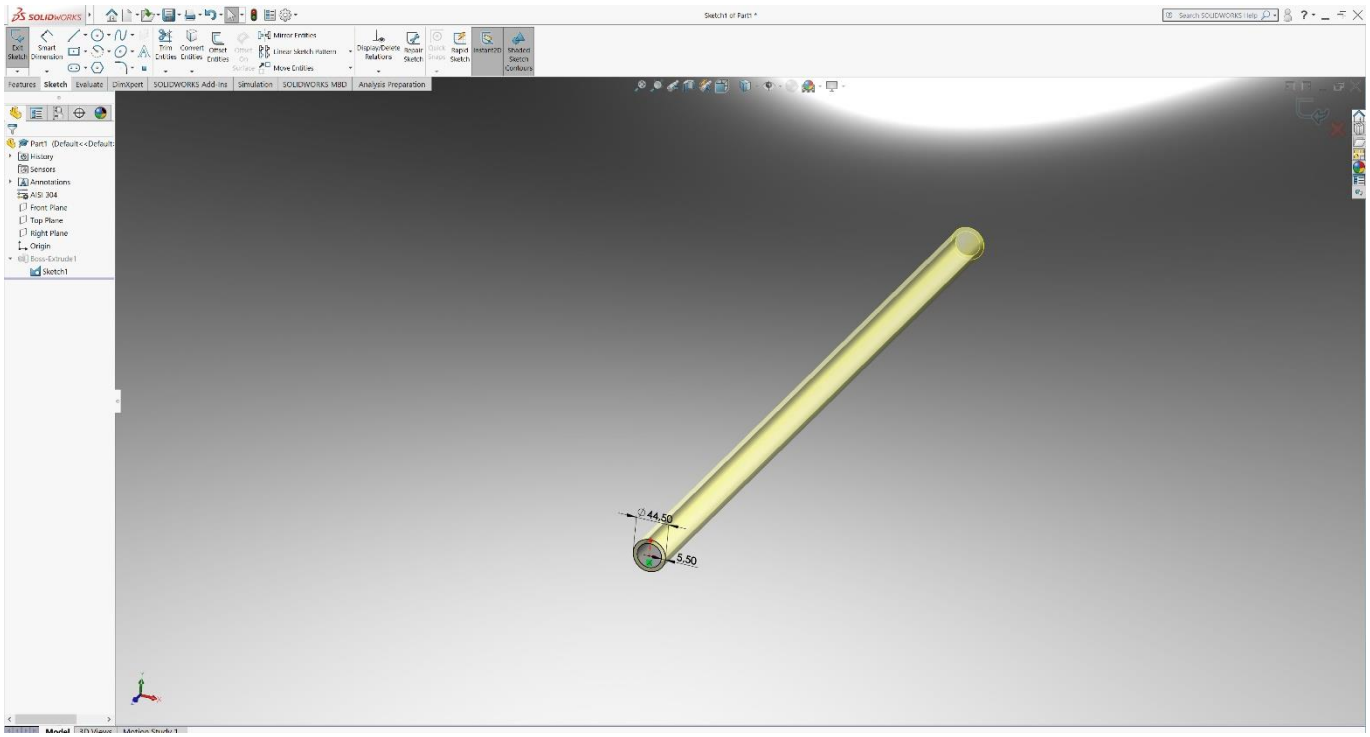

Figure 13. The profile of the tube is extruded in the first extrusion, removing the possibility of reducing the geometry without suppressing the entire extrusion.

The suppression of features i.e. model simplification can be used to make large assemblies much lighter to run without resorting to using lightweight models in SolidWorks. Using lightweight models in SolidWorks loads only a subset of the model data, leaving the remaining model data to be loaded on an as-needed basis (Dassault Systèmes.). On a particularly complex model it is possible to combine using lightweight models and model simplification, further improving performance.
A more important application regarding this thesis for simplification is the exportability of models to PDMS.

SolidWorks is a far superior software for creating detail models for manufacturing. However, many models are impractical to export to PDMS in their fully detailed form, resulting in very poor performance and/or the PDMS software crashing. Tubular objects are notorious for causing performance issues due to the amount of geometry they bring into the PDMS model as well as their usually large number in the models themselves.

The ability to export usable models from SolidWorks to PDMS is crucial for plant layout, as the detail models can be used for updating the plant layout model if they are properly modeled and simplified.

When creating models which are planned to have some features suppressed, either for export or simply for making the model lighter, special consideration should be given to the way mates are created. Mates to features are to be avoided if possible, because the model will have errors if the features used for the mates are suppressed. A way around this is to create reference geometry, using positioning planes or construction sketches for positioning.

When using positioning planes or construction sketches, it is important to consider using global variables or linked values in order to make the mated part follow the feature. For example, in the case of a perforated plate and a series of tubes, if the position of the perforation in the plate is changed, the positioning planes should use linked values or a global variable to make the perforation and positioning plane follow each other.

A global variable is essentially a custom property that can be assigned as a dimension, so long as it is a numerical value or equation. Using global variables, it is possible to control multiple dimensions of features at the same time if they are defined equal to the global variable. Linked values operate in the same way, the main difference between them being how to implement them and the ability for linked values to be changed within the graphical view.

An example case of using linked values for positioning a tube within a very basic tubular air preheater model is demonstrated on pages 15-17 in the modeling guide.

6.1 Coordinate system and positioning for PDMS

The coordinate system PDMS uses is different from SolidWorks and as such, requires the creation of a coordinate system within the model as show in figure 14, with the axes defined as they are in PDMS.

Using the coordinate system within the SolidWorks assembly model, it is possible to position the component correctly before exporting it to PDMS. This is useful because positioning a component within PDMS can be very tedious compared to positioning it in SolidWorks.

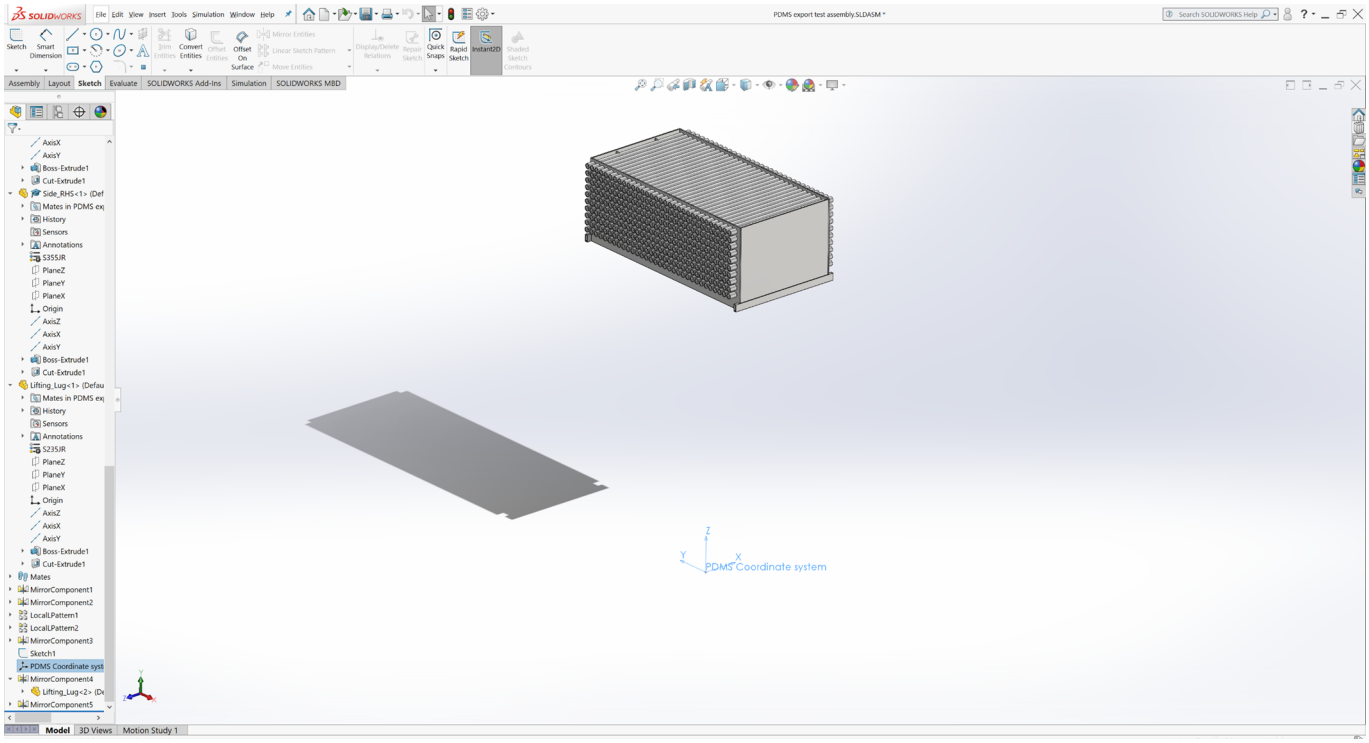

Figure 14. A coordinate system created within SolidWorks for exporting the model to PDMS.

Compared to SolidWorks' coordinate system, Y being up / down, Z forward / back and X being left / right, PDMS has the Z direction as up / down, Y north / south and X as east / west.

Ideally all components could be positioned and oriented within SolidWorks, using the same origin as a reference point before export to PDMS.

6.2 Model definition practices

The guide covers the internal practices of the company which are to be adhered to. These include naming practices, which are particularly important due to PDM as duplicate names are not allowed within PDM.

For example, a component with the name "Hanger lug" cannot exist within the PDM system in two places, even if they are under two different project folders. Hence, model file naming practices need to be set in order to create unique file names for each component, even though in some cases the model itself may be identical. A simple way of achieving this is to add a prefix or a series of prefixes which indicate the project, subcomponent, etc.

Another PDM practice that was defined was the use of a specific file structure, namely the use of a main folder which contains all the files related to a model, including drawings. This is to avoid any possible problems that subfolders may introduce either due to SolidWorks having issues finding files if the name of the file is changed or issues within PDM itself. Due to the selected type of folder structuring, the main assembly should have main_assembly or something similar as a suffix to make it easier to spot within a folder with many files that a complex assembly may have.

A critically important company practice covered in the guide are the new custom properties covered earlier in this thesis, which must be defined in a unified manner because they are used for populating the bill of materials in drawings. If the attributes are not used in the same manner across the company, errors could occur for example due to confusion over the way dimensions or other properties are expressed within the bill of materials.

The guide also outlines the method to export the custom properties of models into excel without resorting to using a macro.

7 CONCLUSIONS

The most crucial tasks for the successful commissioning of SolidWorks within the company were completed within the time allotted for this thesis. However, during the writing phase of this thesis, user feedback of the template files has revealed some issues that require solving and minor revisioning.

Additionally, much work remains to be done with the material library and later the component library. Both tasks involve large amounts of clerical work, which will need to be done once to get both libraries ready to use by the company.

Further work is also needed to properly configure the remaining user specific settings in SolidWorks and propagating all designers and partners.

The modeling guide is currently being review and likely will require more work later. The readability of the manual could be improved slightly and there may be some minor additions to model definitions within the guide. It is also quite likely that as the general experience of using SolidWorks within the company grows, new, more major revisions will have to be made to solve problems which may present themselves with the increased usage.

Feedback regarding the manual has been positive and the manual is considered critical for harmonizing designer workflow among the company and partners.

A constant issue during this thesis was the somewhat unfinished nature of SolidWorks, which became apparent with some seemingly basic functionality that would require coding a macro. Even before work began on this thesis, many cursory searches for solutions with modeling led to the SolidWorks help forums, where often, the solution for the problem was coding a macro using Microsoft Visual Basic for Applications.

While certainly helpful and probably quite convenient if one is experienced with coding using Microsoft VBA, this provides no assistance for designers lacking coding skills. However, SolidWorks is being actively developed and has already included many in-built features in the latest version which were available previously only through macros. This kind of development is likely to continue and will likely result in new built-in features, which will further reduce the reliance of macros and make the software more user-friendly.

This thesis has been a deep dive into the functionality of SolidWorks, providing a very good general idea of what SolidWorks can and can’t do with its built-in features in terms of configuration as well as modeling.

REFERENCES AND SELF-PRODUCED MATERIALS

CADWORKS 2019. [Accessed 2020.4.20] http://www.cadworks.fi/fi/tuotteet/solidworks-simulation

CADWORKS 2019. [Accessed 2020.4.20] http://www.cadworks.fi/fi/tuotteet/solidworks-premium-3d-cad

DASSAULT SYSTÈMES 2019. [Accessed 2020.04.17] https://www.solidworks.com/product/solidworks-3d-cad

DASSAULT SYSTÈMES 2019. [Accessed 2020.4.17]
https://help.solidworks.com/2017/english/SolidWorks/sldworks/c_Lightweight_Components_SWassy.htm

JÄÄSKELÄINEN J., LOVIO R. Globalisaatio saapui Varkauteen. Elinkeinoelämän tutkimuslaitos 2003.
https://www.etla.fi/wp-content/uploads/2012/09/B201.pdf

RYYNÄNEN, SEPPO 2019. EUE4661 3D-Laitossuunnittelu PDMS introduction material. [Accessed 2020.04.20]
https://moodle.savonia.fi/pluginfile.php/680607/mod_resource/content/1/PDMS%20perusteet.pdf

SUMITOMO HEAVY INDUSTRIES, LTD. [Accessed 21.4.2020]
https://www.shi.co.jp/english/company/history/index.html

SUMITOMO SHI FW ENERGIA OY. [Accessed 23.4.2020] https://www.shi-fw.com/projects/

SUMITOMO SHI FW ENERGIA OY 2020, Internal modeling guide

APPENDIX 1:

Sumitomo SHI FW Energia Oy modeling guide

Date:	Document type:	Document status:
17.4.2020	INSTRUCTION	FOR REVIEW

Department:	Document Code:
Boiler Design	

Subject:

SOLIDWORKS MODELING GUIDE

Author:	Checked by:	Approved by:
Eetu Pulliainen	Whole name	Whole name

Revision remarks						
Revision:	Revision date:	Revised Information:	Pages:	Revised by:	Checked by	Approved by:

This document is confidential. SUMITOMO SHI FW reserves and maintains all intellectual property rights relating to it and to the information included therein. Copying, reproducing, altering, distributing the document to third parties or using it for other than intended purposes without prior written consent of SUMITOMO SHI FW is not allowed.

SUMITOMO SHI FW

Relanderinkatu 2, P.O. BOX 201
FI-78201 Varkaus, Finland
T +358 (0)10 393 11

Metsänneidonkuja 10, P.O. BOX 7
FI-02131 Espoo, Finland
T +358 (0)10 393 11

www.shi-fw.com

TABLE OF CONTENTS:

1 INTRODUCTION 3
2 PDM (PRODUCT DATA MANAGEMENT) SYSTEM FILE NAMING AND FOLDER HIERARCY 4
2.1 PDM file hierarchy 4
2.2 PDM file naming 4
3 SOLIDWORKS MODEL SETTINGS 4
3.1 Model planes 4
3.2 Model axes 4
3.3 Model attributes 5
3.4 Specifying dimensions attribute 6
3.5 Tubular parts 6
3.6 Plate parts 7
3.7 Round bar parts 7
4 BILL OF MATERIALS 8
4.1 Exporting to excel 8
5 MODELING GUIDELINES 10
5.1 General 10
5.2 Simplification 10
5.3 Mates 13
5.3.1 How to use mates 13
5.3.2 A general example 13
5.4 Model orientation and coordinate system 16

1 INTRODUCTION

The purpose of this guide is to provide general guidelines for creating models in SolidWorks. These guidelines are intended to make naming models, specifying attributes, assembly placement, orientation and simplification unified across the company.

This guide also provides very broad guidelines on how to model various parts in such a manner that they may be easily simplified within SolidWorks for export to other software such as PDMS.

2 PDM (PRODUCT DATA MANAGEMENT) SYSTEM FILE NAMING AND FOLDER HIERARCY

As the company will start using SolidWorks PDM, certain naming and placement of file practices are to be adhered to.

2.1 PDM file hierarchy

SolidWorks files (main assembly, subassembly, individual part and drawing files) must be saved in the same folder to avoid the need to define a strict subfolder structure, which would cause problems with SolidWorks PDM. For example, 322 – Tubular air preheater folder **should contain all the files related to that component without any subfolders**.

2.2 PDM file naming

Naming files should be done in such a manner that there are no duplicates, because PDM will not accept the same file name twice. The naming structure of models is **Project number** – **System KKS** – **Component Name** – **Free description of part**, for example 123456 – HAC01 – ECO1 – MAIN_ASSEMBLY *or* 123456 – HAH41 – SH1 – TUBE_SHIELD-1. The drawing name is to be the same as the part file name. The main assembly of a component should be indicated as such in the file name with main_assembly in the free description part.

3 SOLIDWORKS MODEL SETTINGS

3.1 Model planes

The part and assembly template planes have now been renamed to PlaneZ, PlaneY and PlaneX.

3.2 Model axes

AxisZ, AxisX and AxisY have been added, which are perpendicular to their respective plane. The new axes can be useful for defining feature or pattern directions.

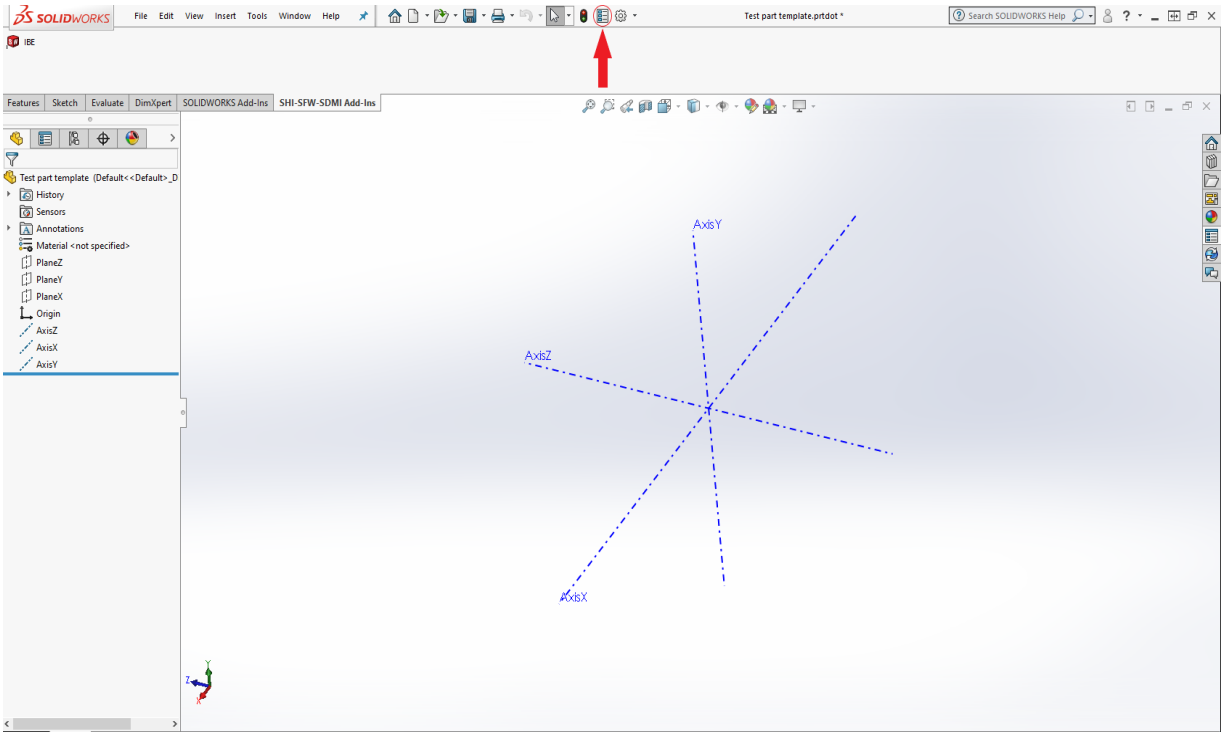

The new attributes can be found in the file property manager indicated with the arrow

3.3 Model attributes

Many attributes have been added, some of which are important for populating the bill of materials. The bill of materials is covered in more detail in chapter 4.

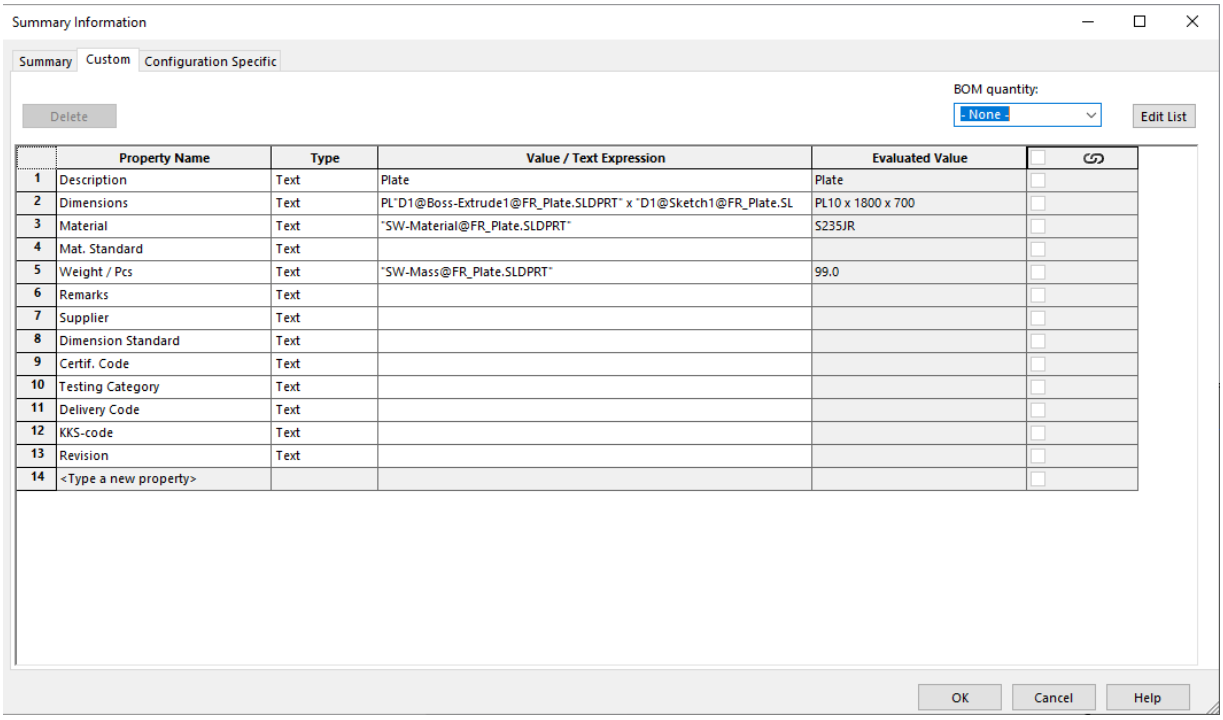

	Property Name	Type	Value / Text Expression	Evaluated Value
1	Description	Text	Plate	Plate
2	Dimensions	Text	PL"D1@Boss-Extrude1@FR_Plate.SLDPRT" x "D1@Sketch1@FR_Plate.SL	PL10 x 1800 x 700
3	Material	Text	"SW-Material@FR_Plate.SLDPRT"	S235JR
4	Mat. Standard	Text		
5	Weight / Pcs	Text	"SW-Mass@FR_Plate.SLDPRT"	99.0
6	Remarks	Text		
7	Supplier	Text		
8	Dimension Standard	Text		
9	Certif. Code	Text		
10	Testing Category	Text		
11	Delivery Code	Text		
12	KKS-code	Text		
13	Revision	Text		
14	<Type a new property>			

Description – The general description of the part

Dimensions – The dimensions of the part, which are to be expressed in a certain order, depending on the model

Material – The material of the part, will populate the BOM automatically if the material is set in the model

Mat. Standard – Must be manually inputted according to the selected material

Weight / pcs – Weight of the part, calculated automatically by SolidWorks according to material and volume

Remarks – Any remarks regarding the part will be added here.

Supplier – Part supplier or fabricator, normally not filled

Dimension Standard – Used for catalog parts, nuts, bolts, etc.

Certif. Code – Material certification code as required in the project (2.2, 3.1, 3.2, MTR…)

Testing Category – Material testing category as required in project

Delivery Code – Part delivery code, normally not filled

KKS-code – Used for the KKS code

Revision – The revision of the model

3.4 Specifying dimensions

Dimensions are to be specified in a specific order, depending on the type of part. Adding model dimensions to attributes is done by selecting the dimensions cell in the file property manager and then clicking on the desired dimension while having the cell active.

3.5 Tubular parts

When specifying dimensions for tubular parts, **OD** should be manually added as a prefix for outer diameter and as the letter **t** suffix for thickness.

Tubular parts should always have outer diameter as the first dimension added then length and thickness as the last dimension.

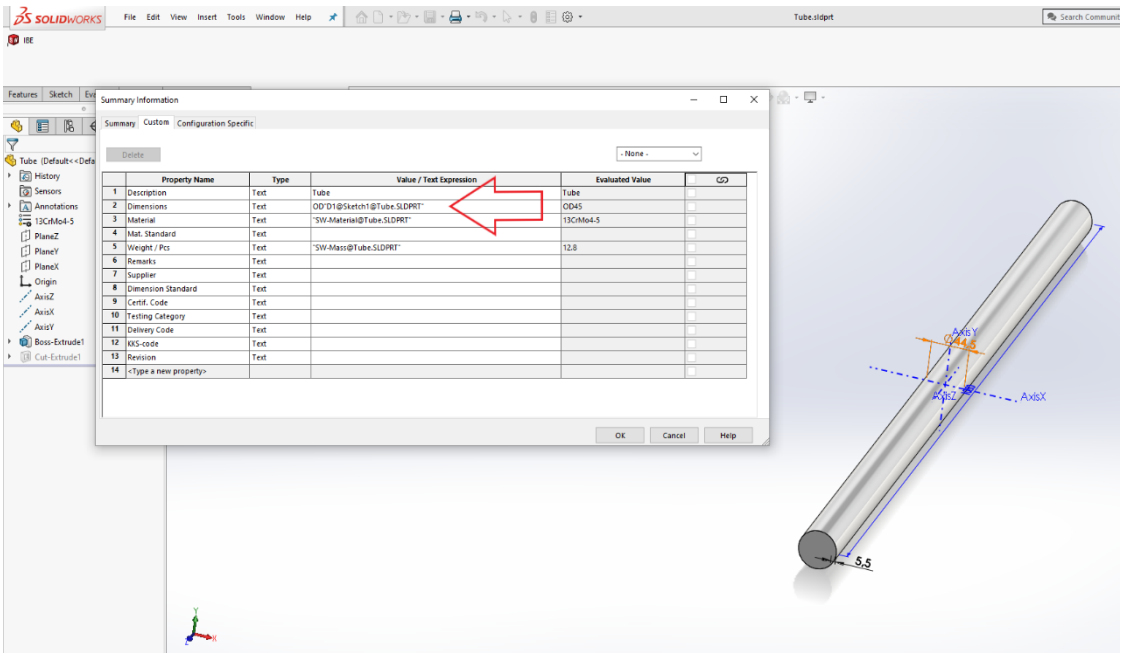

This is how the dimension cell will look once clicking on outer diameter in this case. Note the manually inputted letters OD before the actual model dimension

Add spaces between the dimension and Xs to improve readability, as demonstrated in the end result:

NO	Description	Dimensions	Material	Qty	Weight / Pcs	Remarks
1	Tube	OD44,5 x 1050 x 5,5t	13CrMo4-5	1	12.8	

When dealing with more complex swept tubes, the easiest method to get the correct length is to use **path length** under **Smart Dimension** and create a driven dimension on the sketch, which can then be used to specify the length of the tube for the bill of materials.

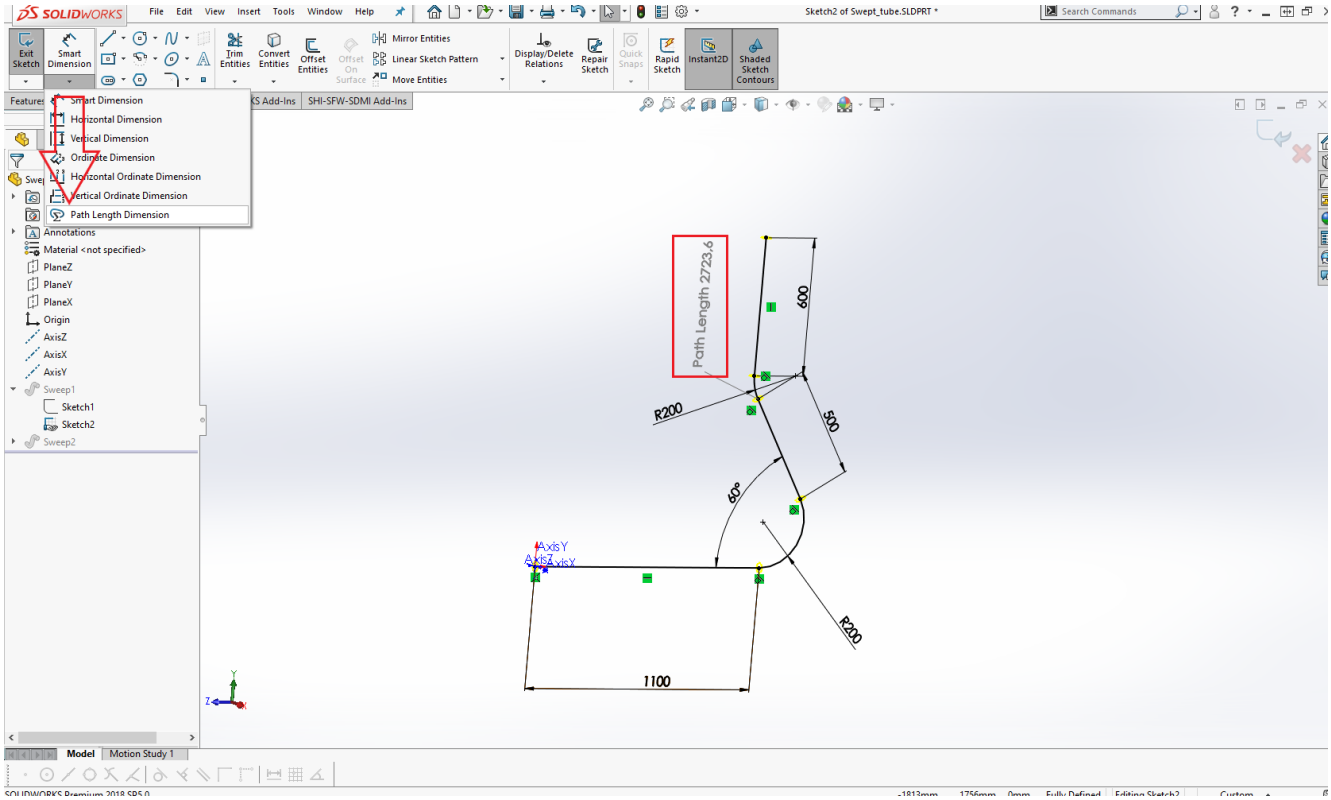

3.6 Plate parts

Plate dimensions should have their dimensions specified as PL(thickness) x (width) x (length).

3.7 Round bar parts

Round bar dimensions should be specified as OD(thickness) x (length).

4 BILL OF MATERIALS

4.1 Exporting to excel

Exporting the bill of materials to excel may be necessary in cases where there are too many parts in the assembly, making using a bill of materials in the drawing impractical.

For this purpose, detailed bill of materials template was created that contains columns for all the attributes within parts or assemblies.

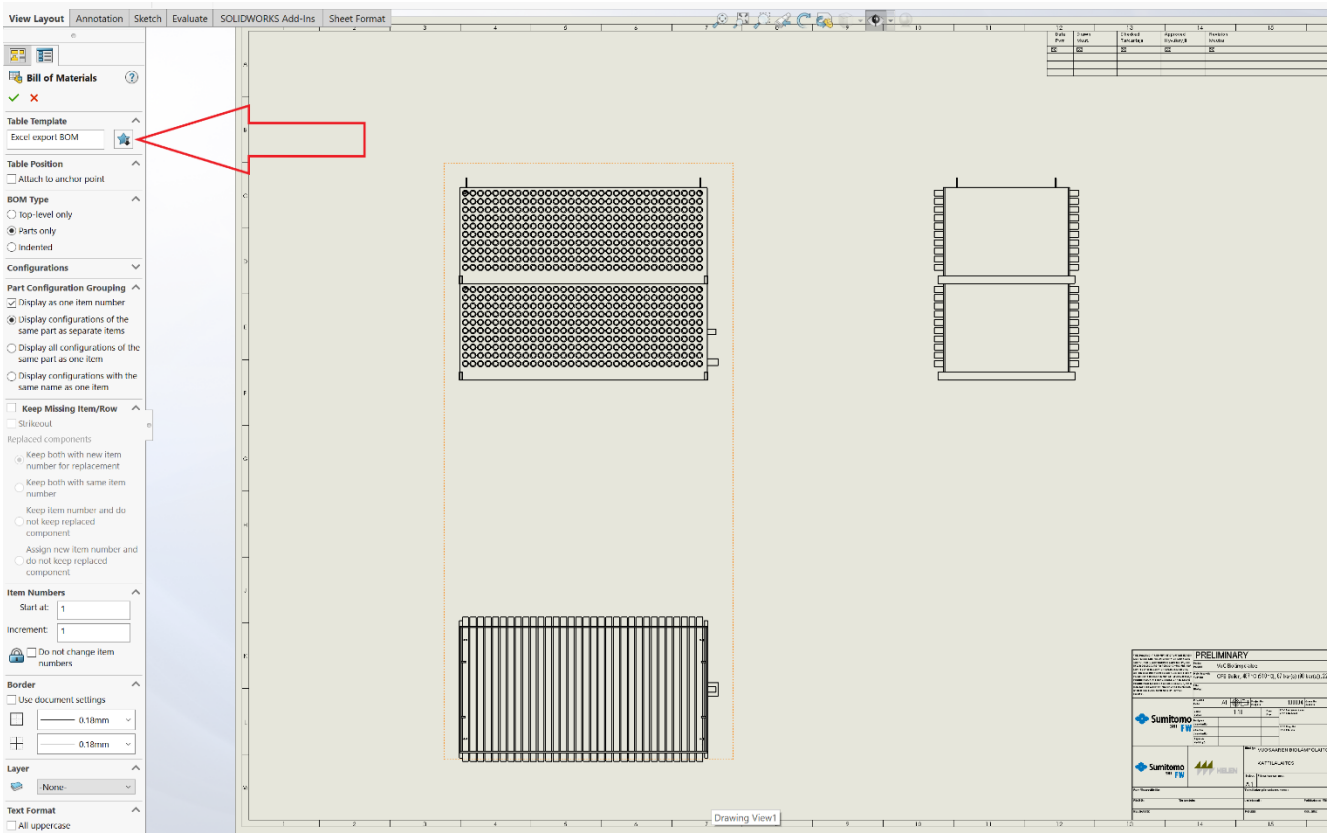

To export the BOM to excel, begin by selecting the “Excel export BOM” when inserting a bill of materials in a drawing

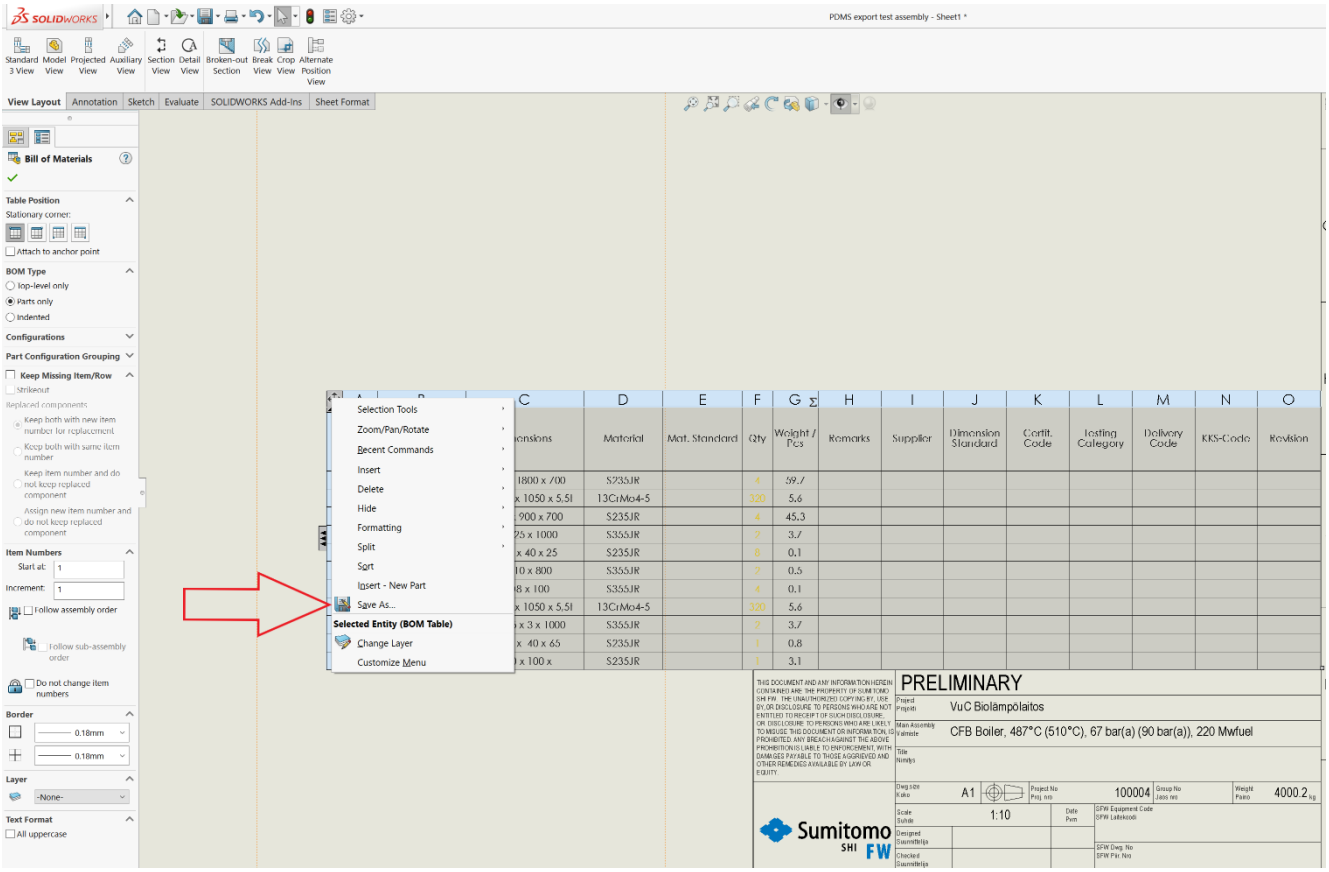

Once you have inserted the export BOM somewhere in the drawing, right click on the corner of the BOM to select the entire table and select “Save As…”

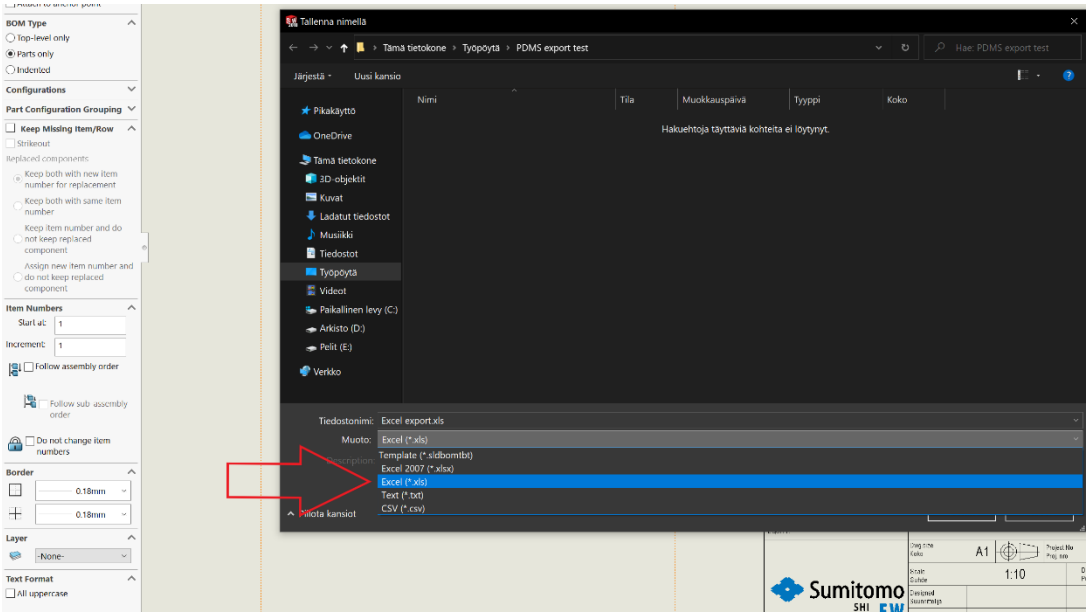

On the “Save As…” window select Excel as the form

5 MODELING GUIDELINES

5.1 General

In order to make exporting SolidWorks models for use in other software feasible, special consideration should be given to how models and features are constructed. The important point is generally to model in such a way that model details are not in the first extrusion's sketch but rather created afterwards.

Parts and assemblies must be simplified because SolidWorks models with all features enabled and exported to PDMS often contain far too much geometry for the export to be useful. Easy simplification in the produced models also enables making models lighter in SolidWorks itself without resorting to making parts lightweight.

Additionally, when mating components, mates to features which may be simplified away should be avoided because the mates will obviously break if the feature will be simplified away.

The examples shown here are not all-encompassing but merely demonstrate the general principles that should be adhered to.

5.2 Simplification

Step 1

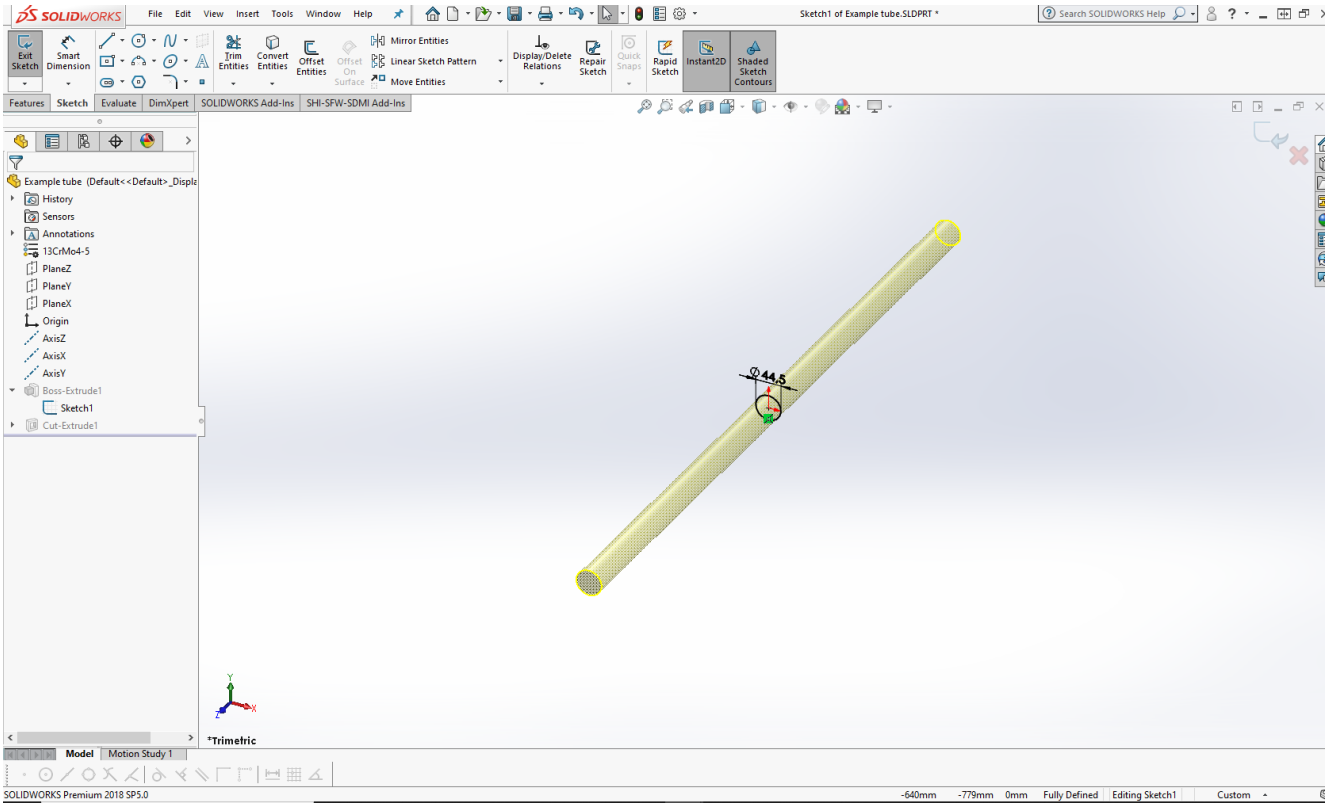

A simple straight tube is created by using the outer dimensions to create a rod

Step 2

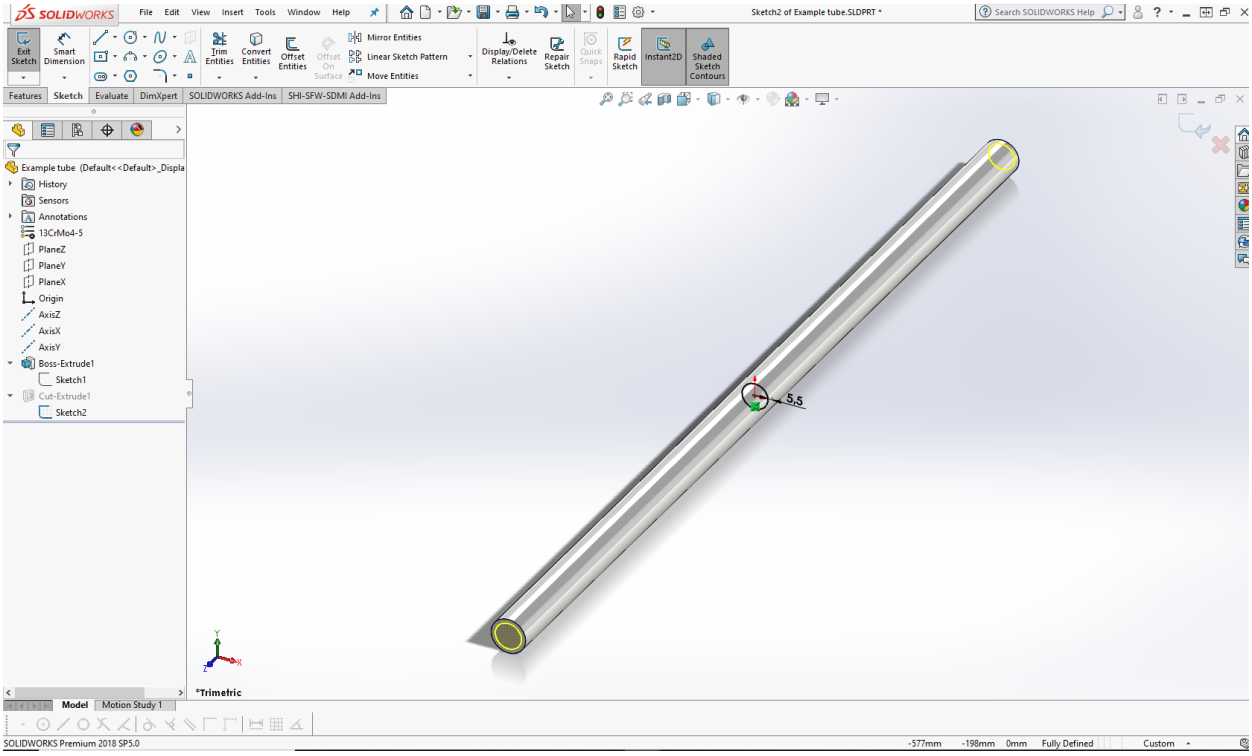

Then another circular sketch is used to create the hole itself, using the desired wall thickness to define the sketch for the extruded cut

Step 3

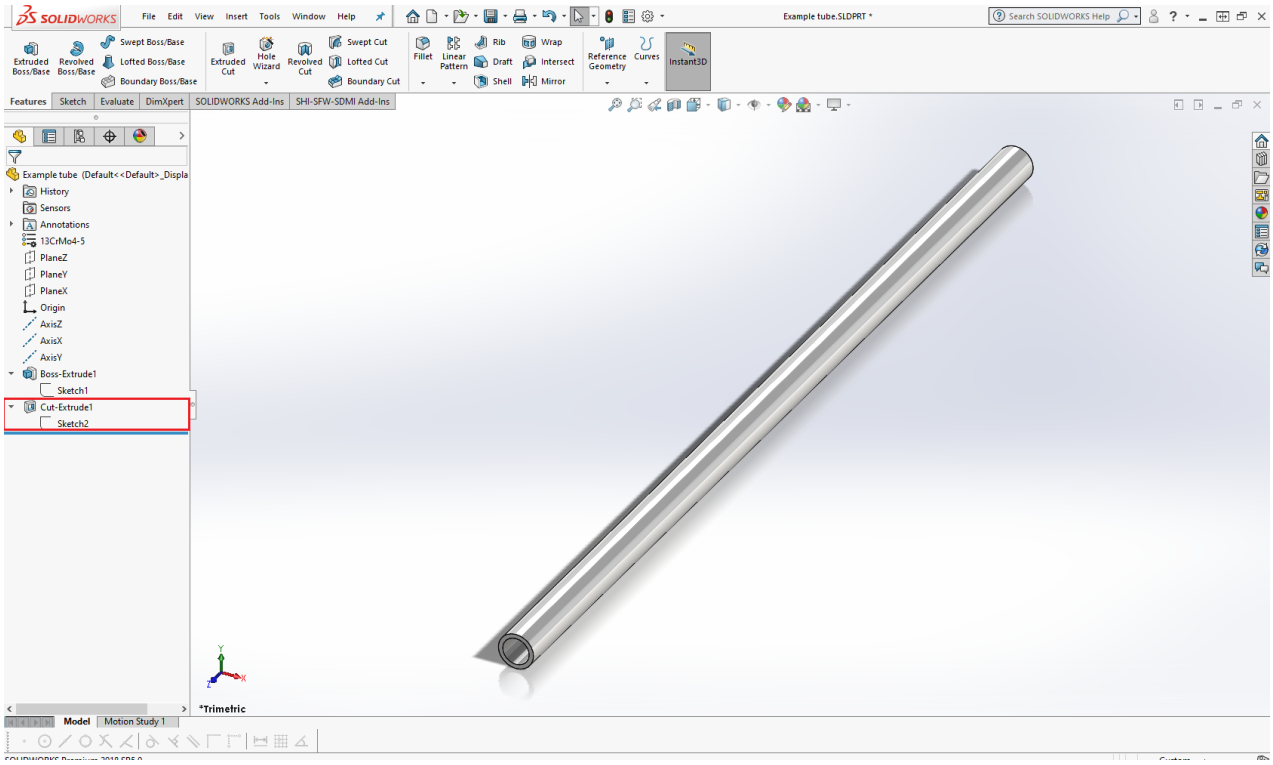

End result is a tube, which has a separate feature for the hole that may be easily suppressed for simplification

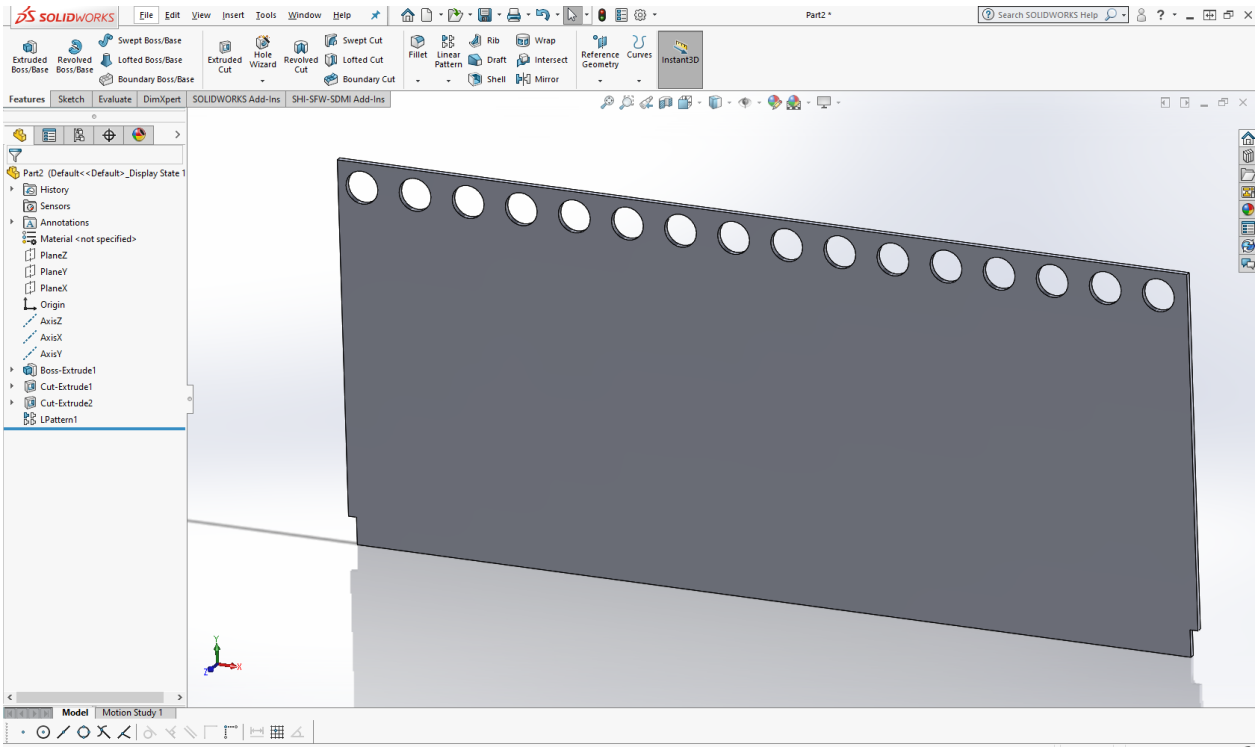

Same idea with a plate but with two rectangular corner cuts and a patterned hole cut all of which can be suppressed separately

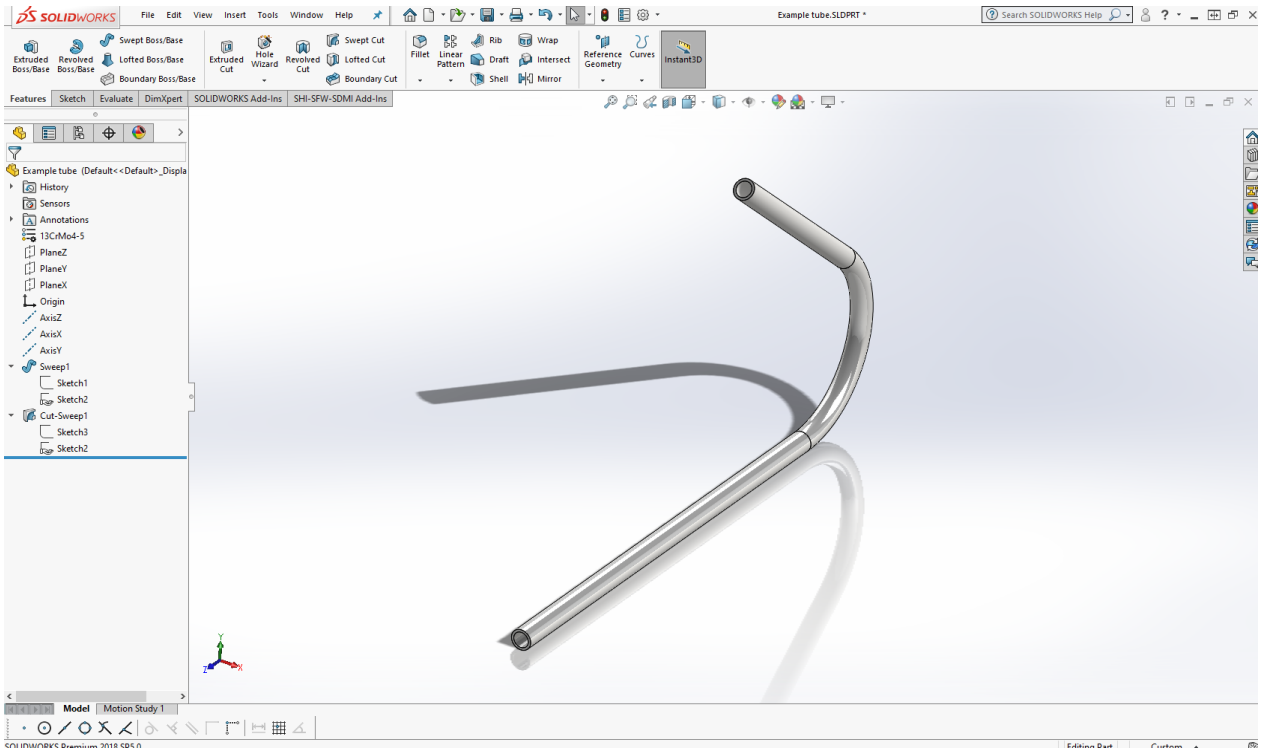

The same principle can obviously used in more complex tube shapes just the same, in this case with a swept cut that follows the original extrusion path

5.3 Mates

Mates create geometric relationships between assembly components in SolidWorks. As mates are added, the allowable directions of linear or rotational motion are defined.

In order to create assemblies which, work even after simplification, the way mates are used must be considered.

5.3.1 How to use mates

The main thing to keep in mind when creating mates that none of the mates should be done with features that may be suppressed away.

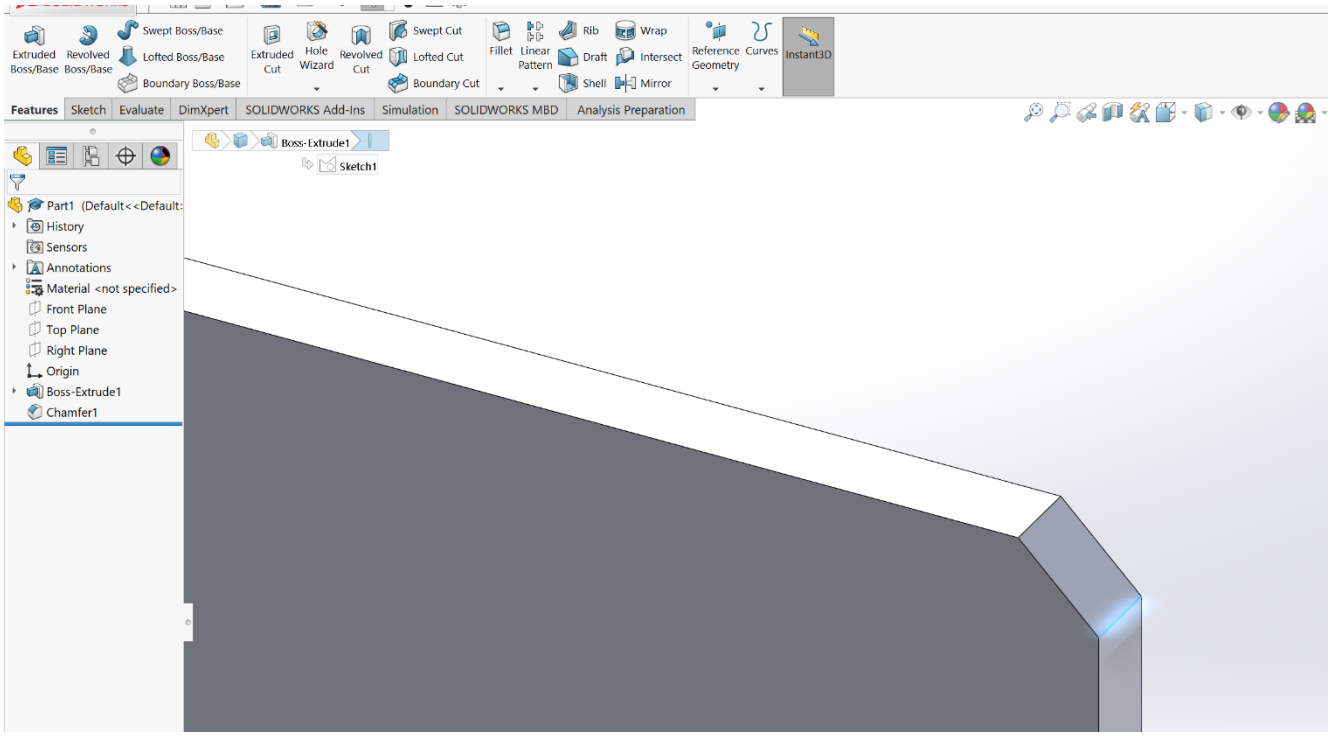

For instance, in this picture there is a plate that has a chamfer in the corner. Mating anything to the highlighted edge, the chamfer face or any of the corners will break the mate if the chamfer is simplified away

Mating tubes to holes in a plate is also problematic because the holes may be suppressed away.

5.3.2 A general example

Below is an example assembly of a tubular air preheater module, which will be used to demonstrate the basic idea on how to use mates in assemblies which have features that will be simplified away for exported models.

Because the holes in the front and rear wall are suppressed away during simplification, the tube should not be mated to the hole. A way around this is the creation of positioning planes with linked values to the hole pattern distance from edge in the front plate.

To avoid any unnecessary links between parts, the positioning planes must be created in the same part as the feature that may be suppressed away.

Step 1

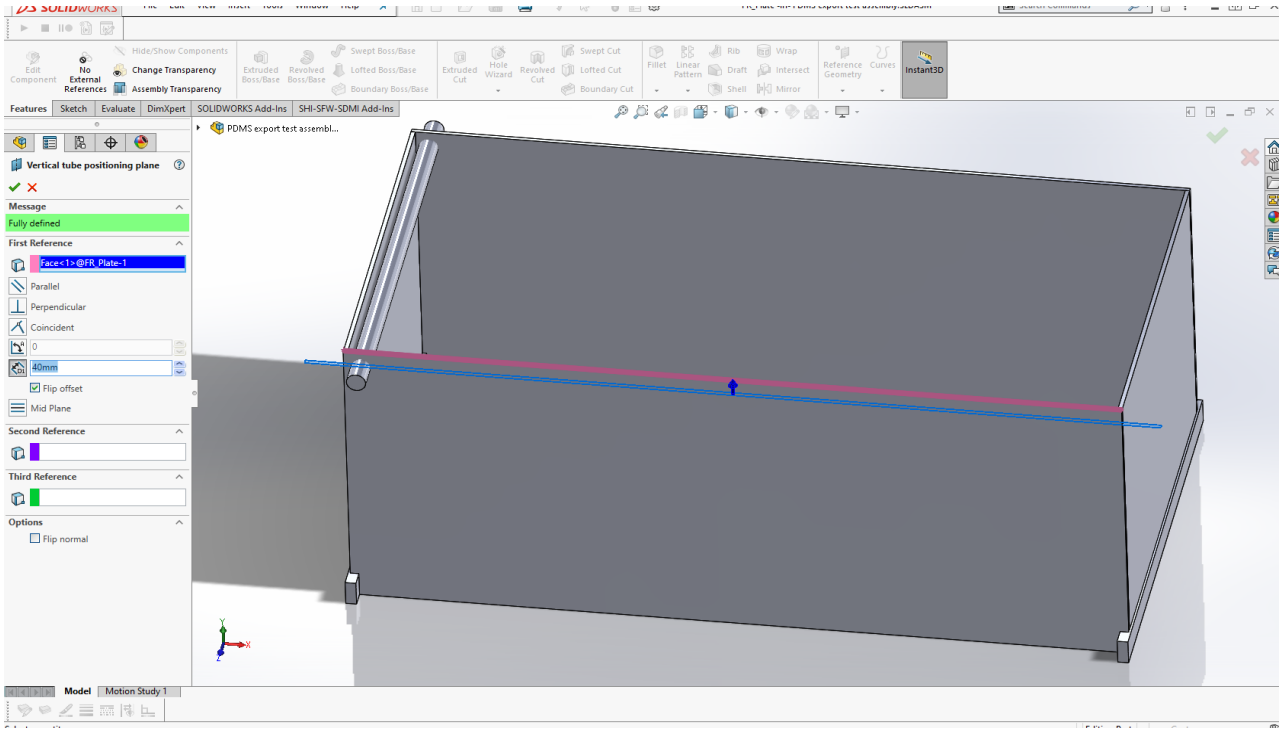

We will first create the vertical positioning plane by simply selecting the top face of the front wall plate and giving it a distance offset. Note that the planes **must be within the part**, not the assembly.

Step 2

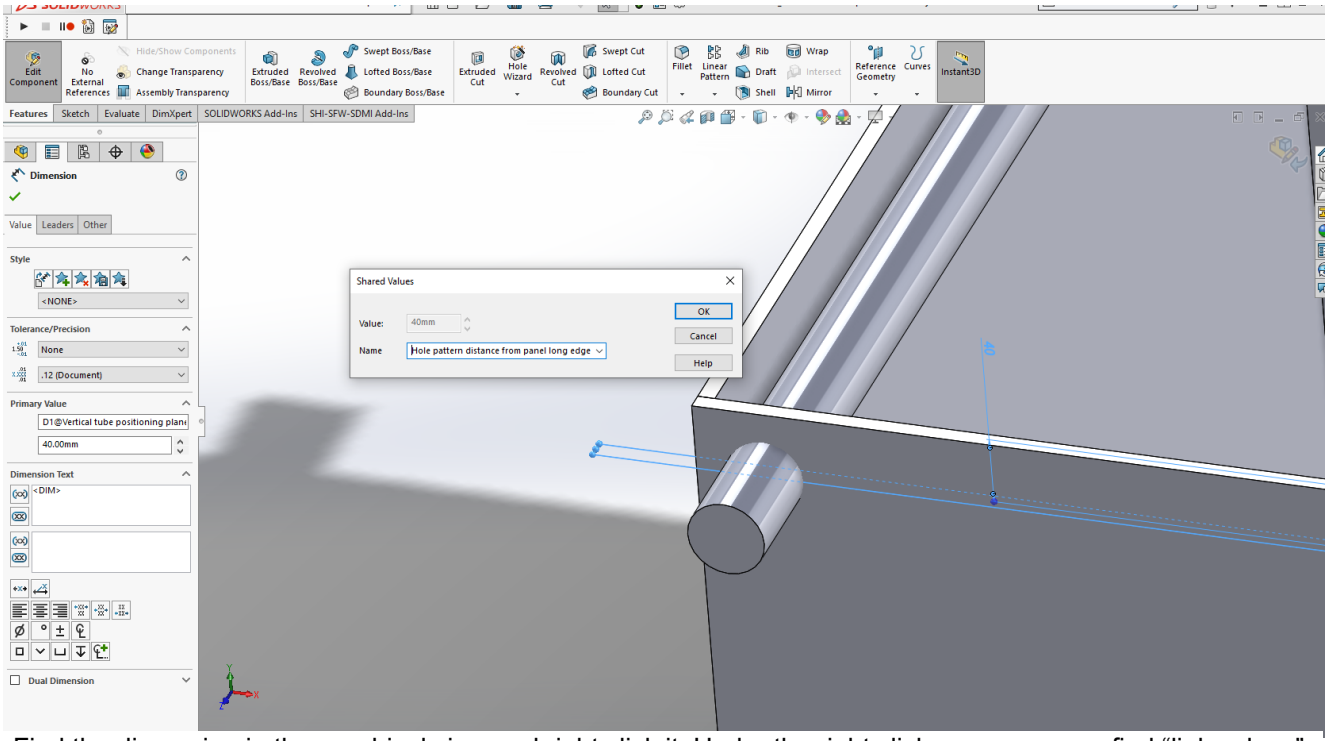

Find the dimension in the graphical view and right click it. Under the right click menu you can find “link values”, which will bring up the window shown in the picture above. Give a descriptive name to the values being linked, like above.

Step 3

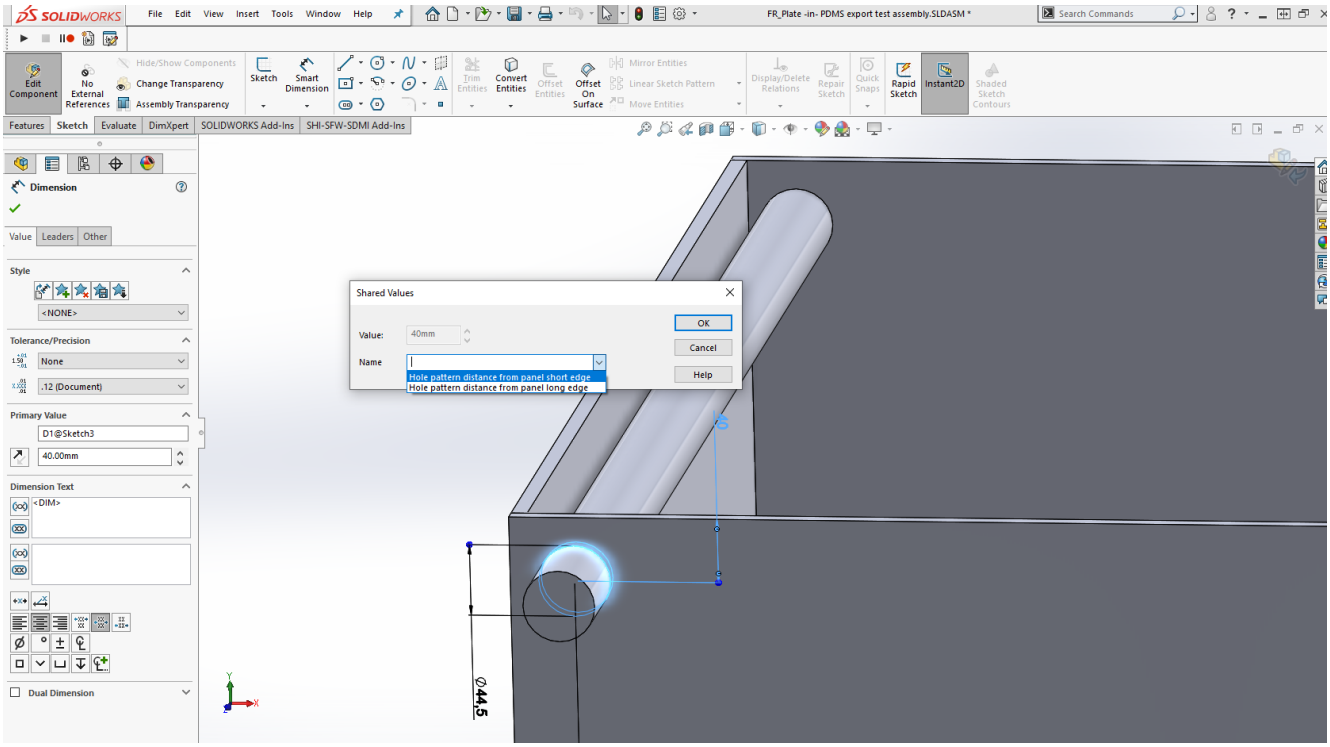

Once you have created the linked value when linking the first dimension, you can find it in the drop-down menu. In this case we have already created both shared values we wish to use. For this plane we will select “hole pattern distance from panel long edge”.

Step 4

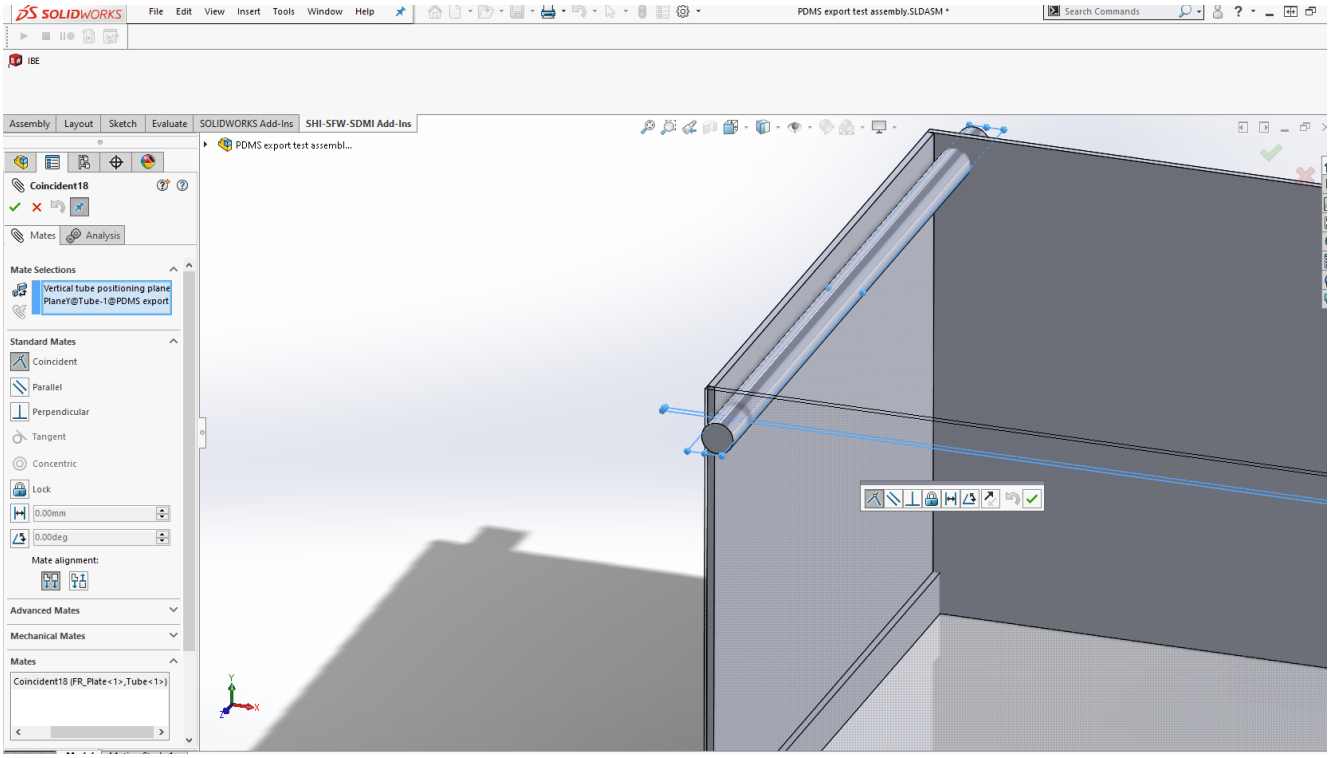

After the plane has been created and the hole pattern and plane offset values have been linked, simply create a mate between the plane Y of the tube and the vertical positioning plane we created. The same process will be repeated for the horizontal plane.

5.4 Model orientation and coordinate system

In addition to simplification, correct model orientation and coordinates is critically important to make the exported models usable in other software. All models **must be modeled in their correct orientation** and **coordinates** respective to their relation to other plant components.

For example, a separator is to be modeled in the normal, upright orientation. The correct coordinates of the separator must be checked from PDMS and the coordinate system for export placed in the right position.

Step 1

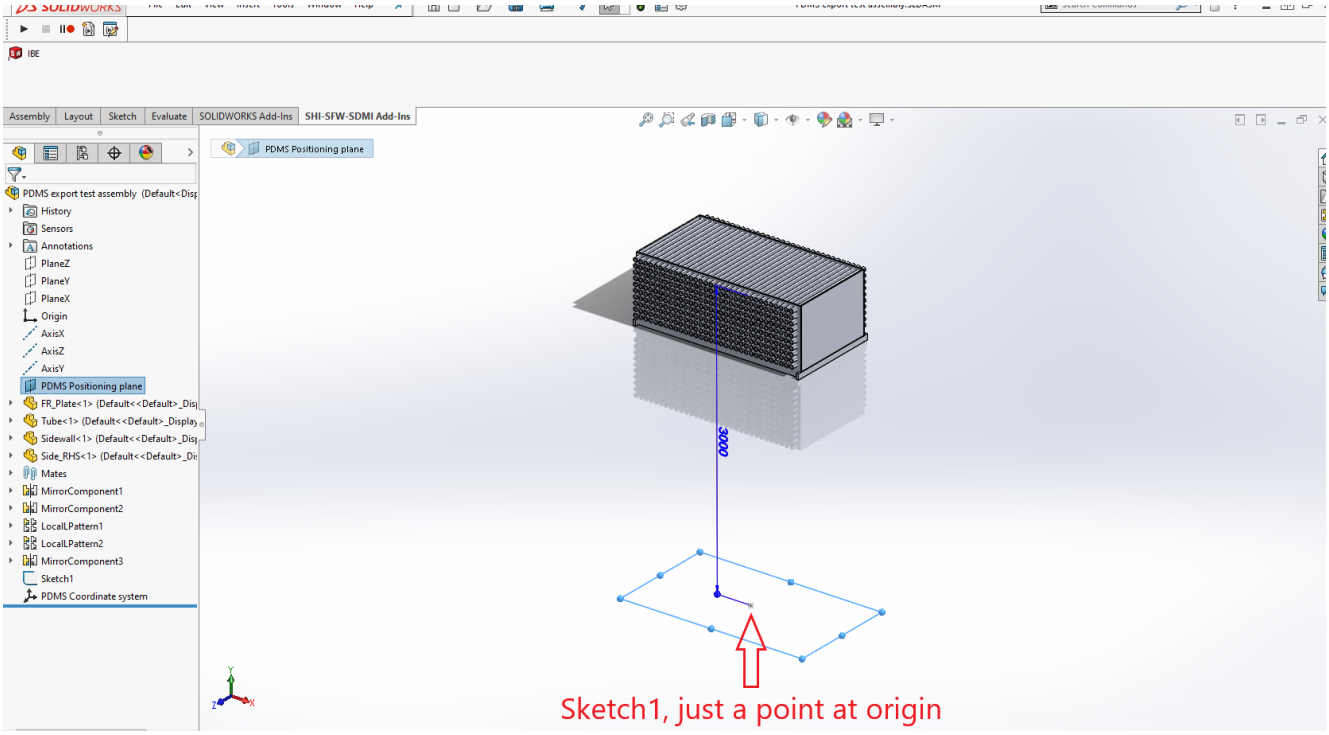

First, check the elevation of any particular component in PDMS. Then create a plane with an offset distance from the center plane of the assembly according to the elevation of the component. After this create a sketch on the plane which contains a point at the origin of the plane.

Step 2

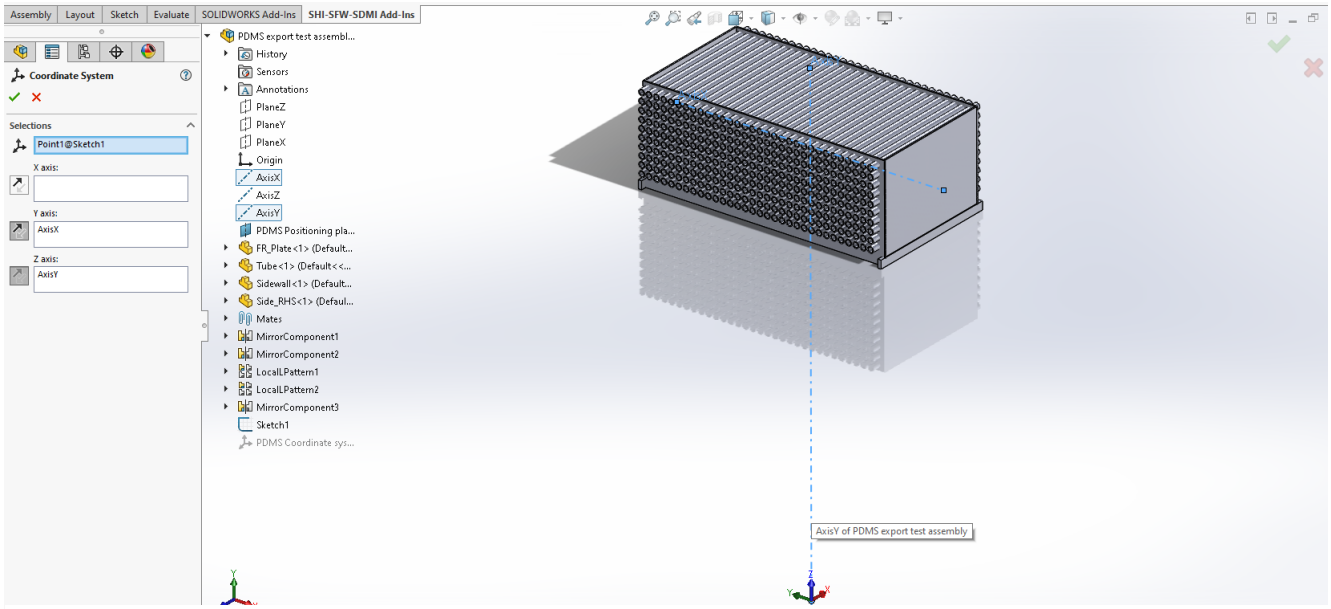

After this, create a coordinate system using the created sketch point as the origin, AxisY for the Z axis and AxisX for the for the Y axis to make the coordinate system according to the one used for PDMS. Ensure that directions are correct and flip if necessary.

Position the component in the correct coordinates in the remaining X and Z directions with offset mates using the planes of the assembly and the respective axes.