VAASAN AMMATTIKORKEAKOULU
UNIVERSITY OF APPLIED SCIENCES

Ziqiu Sun

SMS WATER LEAK ALARM WITH MICROCONTROLLER

embedded SW& HW design

Information and Communications Technology
2021

VAASAN AMMATTIKORKEAKOULU
UNIVERSITY OF APPLIED SCIENCES
Information Technology

ABSTRACT

Author	Ziqiu Sun
Title	SMS Water Leak Alarm with Microcontroller
Year	2021
Language	English
Pages	30 + 3 Appendices
Name of Supervisor	Jani Ahvonen

In any appliance that uses water, such as a dishwasher or washing machine, it is possible to cause water damage if the leak is not noticed in time. The leak can be difficult to locate. The purpose of this thesis was to make a system that sends a traditional text message SMS when a sensor detects a leak in a household appliance.

The implementation was made with a microcontroller and water sensor which contains HW and SW design. The article uses a microcontroller STC89C52RC and a GSM modem SIM900A to build a system for the water leak alarm. The system consists of a leakage detection circuit, a microcontroller minimal system and a SIM900A SMS modem. The water leakage detection circuit uses a water droplet detection module consisting of a water droplet sensor and a signal conditioning circuit. If there is a small amount of leaking water, the water droplet sensor can detect it and send it to the microcontroller control system after processing by the signal conditioning circuit, and the microcontroller sends command to the SIM900A SMS modem to start the module sending alarm alert SMS to the specific receiver. The designed system of the thesis works and realizes the function successfully.

Keywords STC89C52, Microcontroller, Water Leak Detection, SMS Alarm, SIM900A

CONTENTS

ABSTRACT

1 INTRODUCTION 6

2 DESCRIPTION OF THE SYSTEM DEVELOPMENT PROCESS 7

2.1 Design Plan 7

2.2 Hardware Design Master Microcontroller 8

2.2.1 STC89C52RC the Master Microcontroller 9

2.2.2 Water Sensor 12

2.2.3 SIM900A GSM Modem 16

2.3 Electric Circuit Connection 18

2.4 Software Design 19

2.4.1 Introduction of the Software 19

2.4.2 Programming 20

3 DESCRIPTION OF THE SYSTEM OPERATION 23

4 CONCLUSION 24

5 ASSESSMENT 25

REFERENCES 26

APPENDICES

LIST OF FIGURES AND TABLES

Figure 1. General design diagram p. 8

Figure 2. Compositions of hardware of the system p. 9

Figure 3. Pin configuration p. 12

Figure 4. Image of STC89C52 p. 12

Figure 5. Resistive water droplet sensor p. 15

Figure 6. Image of water droplet sensor p. 15

Figure 7. Pin configuration p. 15

Figure 8. Image of SIM900A p. 17

Figure 9. Detailed picture p. 17

Figure 10. Whole circuit p. 18

Figure 11. STC89C52RC power circuit p. 19

Figure 12. Composition of software of the system p. 20

Figure 13. System Flowchart p. 21

Figure 14. Screenshot of Keli p. 21

Figure 15. Screenshot 1 of code p. 22

Figure 16. Screenshot 2 of code p. 22

Figure 17. Screenshot 3 of code p. 22

Table 1. Examples of 51 series. p.10

Table 2. Differences between STC89C52 and STC89C51 p. 11

Table 3. Pin function p. 16

Table 4. D5 and D6 p. 23

LIST OF APPENDICES

APPENDIX 1. General design schematic

APPENDIX 2: Code

APPENDIX 3. Thesis assessment criteria

APPENDIX 4. Datasheet of SIM900A

APPENDIX 5. User Manual of SIM900A

APPENDIX 6. Raindrop sensor module circuit diagram

APPENDIX 7. Photographs of the system

1 INTRODUCTION

In any implement that needs water, such as a washing machine or water cooler, there is a risk of damage or danger, such as short circuit and fires, if a water leakage is not discovered in time. Furthermore, with the increase of the population and the development of the economy, the demand for water resources is constantly increasing. Coupled with the existence of unreasonable exploitation and utilization of water resources, many countries and regions have varying degrees of water shortage. (Bi Xianyun, 2013)

Sometimes in our daily life it is possible to waste a lot of water caused by the water leak. Moreover, the leak also can cause different damage, for instance, building leak, in different buildings the leak can induce various degrees of property or security damage. (Chen Licheng, Liu Jiaming, Zhu Jinchun & Zheng Linfei, 2016, 14)

However, the leak can be difficult to detect. In order to avoid or reduce these damages which are caused by prolonged water leakage. This thesis aimed to produce a system that send a SMS[1] when a sensor detects a water leak in a domestic appliance or other place that needs to be kept dry. The system was implemented through a microcontroller and water sensor containing hardware and software design.

[1] SMS is abbreviations of Short Message Service.

2 DESCRIPTION OF THE SYSTEM DEVELOPMENT PROCESS

2.1 Design Plan

In this thesis, a water leak alarm system is designed with the STC89C52RC microcontroller as the brain of the whole system, to use a water droplet sensor to detect whether there is water, and keep sending the leak alarm messages to mobile by SIM900A GSM modem[2] , until the sensor detects there is no water.

This system uses STC89C52RC microcontroller as the main control microchip and programed the microcontroller. The program executes the control operation of the related process. SIM900A registers network and the I/O port is fully assigned to the sensor. The sensor is monitored in real time, if there is water detected by the sensor, the main control microcontroller will send a command to the SIM900A GSM through the serial ports. The command requires sending an alarm message from SIM900A. Then the mobile will receive the alarm message from the GSM modem. The general block diagram of the design is shown in Figure 2.

[2] GSM modem: "Global System for Mobile Communication. A GSM modem is a generic communication device just like its wired ancestors, but since the service is subscription-based, it must have a SIM card installed. This card connects the modem to the proper provider and identifies the user of the device to the carrier network." (What is a GSM Modem? | NowSMS, 2021)

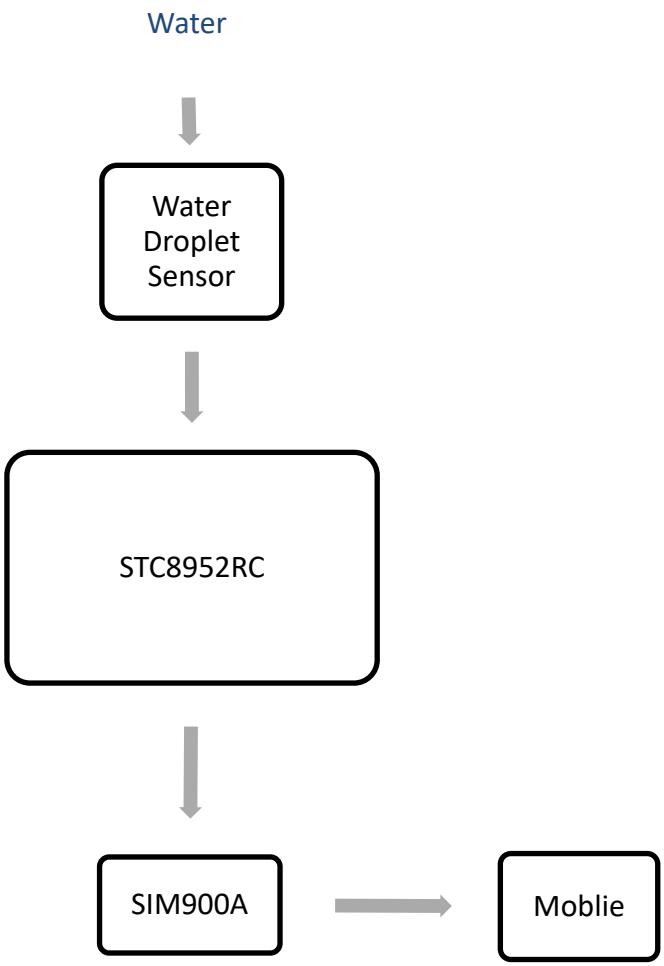

Figure 1. General design diagram

2.2 Hardware Design Master Microcontroller

Firstly, it was necessary to consider what kind of sensor to use for water leakage detection and a lower-cost water droplet sensor was chosen. (Anon, (2021)) Secondly, in terms of main control, a 51 series single-chip microcontroller that is stable and has simple signal processing and serial port transmission functions was required. (Huang Xiaozheng & Wu Huiming, 2001,06) Then, realizing that the owner can still find the danger of water leakage in household appliances or other place where the leakage cannot be detected in time, the choice was made to use

the telecommunications network to send an SMS message for remote alarm notification. Therefore, the SIM900A GSM modem, which can be controlled by serial AT[3] commands, was chosen. (Lin Haixiang, 2021,4)

The hardware compositions of the water leak system are shown in Figure 2.

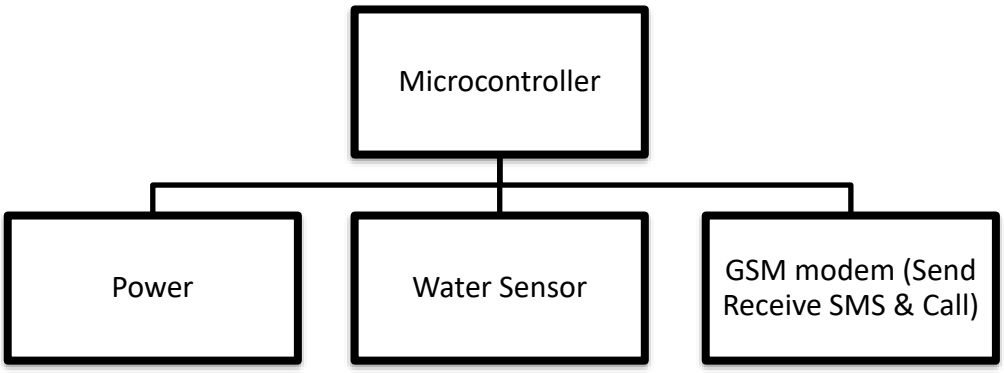

Figure 2. Compositions of hardware of the system

2.2.1 STC89C52RC the Master Microcontroller

1. 51 Series Microcontroller

The 51 series microcontroller is a general term for all microcontrollers that are compatible with the Intel 8051[4]. The originator of this series is Intel 4004[5] microcontroller, which is the early microcontroller of Intel. There are some

[3] AT commands: "The command line used in every modem starts with 'AT' otherwise 'at', so these commands are named as AT commands." (What are AT Commands: Different Types, and Their List, 2021)

[4] The Intel MCS-51 (commonly termed 8051) is "Intel's 8051 Microcontroller (Intel MSC-51 Architecture) was a successor to 8048 Microcontroller (Intel MSC-48 Architecture)". (8051 Microcontroller Introduction, Basics and Features, 2021).

[5] "The Intel 4004 microprocessor is unique in that it is one of the smallest microprocessor designs that ever went into commercial production. Initial transistor count." (The Story of the Intel® 4004, 2021)

example products of 51 series microcontrollers from different companies shown in Table 1.

Table 1. Examples of 51 series

Intel	80C31	80C51	871C51
ATMEL	89C51	89C52	89C2051
STC	89C51	89C52	89C516

Advantages of 51 series:

1. It has a complete bit-by-bit[10] operation system from the internal hardware to the software, called a bit processor, which handles not bytes but bits. It is not only capable of processing a bit in some special function registers in the microcontrollers, such as transmission, setting, clearing, and testing, but also of carrying out logical operations on the bit, which makes the microcontrollers very functional and easy to use.
2. At the same time, a dual-function address interval is created specially in the RAM[11] area of the microchips, which is extremely flexible to use. This function undoubtedly provides users great convenience.
3. It has multiplication and division instructions, which also bring convenience to programming. Many eight-bit microcontrollers do not have the multiplication function. When doing multiplication, more programing is needed, which is very inconvenient. (Zhou Liang, 2019)

---

[10] "Using this comparator on this numbers will do the operation bit by bit, for example: int a = 47; // 0000000000101111 int b = 75; // 0000000001001011 int c = a & b; // 0000000000001011 -> In decimal 11. If you investigate the last line, the number is the result of comparing every bit, bit by bit. of the two above lines with the AND operator." (Carrasco, 2021)

[11] RAM: Random-access memory is a form of computer memory that can be read and edited in any order and is usually used to store working data and machine code. (Random-access memory - Wikipedia, 2021)

2. STC89C52RC features

STC8952RC is a low-power, high-performance CMOS[12] 8-bit microcontroller produced by STC, with an 8K byte system programmable Flash memory[13]. STC89C52RC is enhanced edition of STC89C51. STC89C52 uses the classic MCS-51 core but has a lot of improvements to make the chip have more functions than traditional 51 series single-chip microcontroller. For the chip it has a smart 8-bit CPU[14] and for the system it can program Flash.

There are some differences between STC89C52RC and STC89C51 shown in Table 2.

Because the microcontroller of STC89Cxx series is similar, the datasheet of these series is generic. The English and Chinese datasheets of the microcontroller are attached at the end of the thesis report and the datasheets also can be found on the websites.

(Lin Haixiang, 2021,04)

The image of the STC89C52RC component is Figure 4.

Table 2. Differences between STC89C52

	Voltage(V)	Internal program memory[15]	Flash Memory	Number of Timer
STC89C52RC	5.5-3.3	FLASH	8K	3
STC89C51	5.5-3.3	EPROM	4K	2

[12] CMOS: (abbreviation for Complementary Metal Oxide Semiconductor) is a CMOS term and is often used to describe a small amount of memory on a computer's motherboard where BIOS settings are stored. (CMOS and CMOS Batteries: Everything You Need to Know, 2021)

[13] Flash memory, also can be called flash storage, is a type of nonvolatile memory that allows data to be erased in a single block. (What is Flash Memory and How Does it Work? 2021)

[14] CPU is abbreviations of central processing unit.

[15] The program memory is filled with the program code executed by the microcontroller. (Program Memory - an overview | ScienceDirect Topics, 2021)

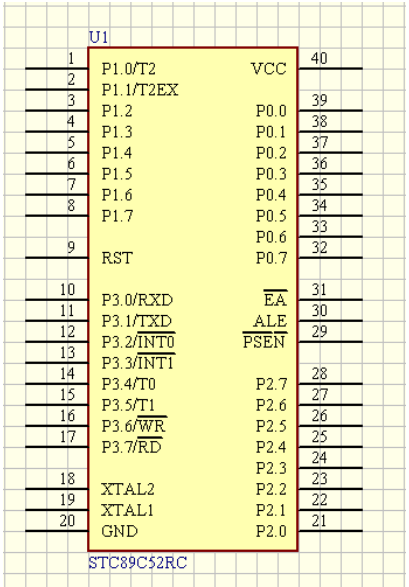

Figure 3. Pin configuration (STCMCU, 2011)

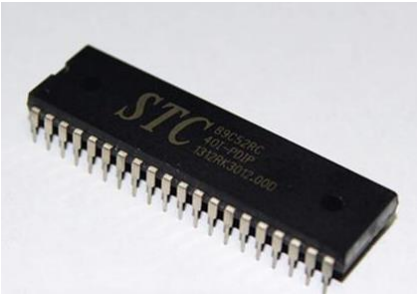

Figure 4. Image of STC89C52 (STCMCU, 2011)

2.2.2 Water Sensor

The water droplet sensor is used to detect whether it is raining or the number of raindrops when it is raining. It consists of two modules: a rain shield for detecting rainwater and a control module that compares analog values and converts them to digital values. The water droplet sensors can be used to automatically control wipers in the automotive field, to detect rain in agricultural areas, and in home

automation system. At present, it has four types of water droplet sensors, including capacitive and resistive, infrared light detection and camera raindrop sensors all of which can detect the size of rain indirectly or directly.

The water droplet sensor was chosen for this system because it is sensitive and fast enough to detect the water leak in a domestic appliance. It is also easy to buy and is not expensive. (Rain drop Sensor Module Pinout, Datasheet & How to Use it in a Circuit, 2021)

Resistive water droplet sensor is a kind of resistive sensors. The basic principle is to convert a change in the physical quantity to be measured into a change in the resistance value, which is then displayed or recorded by the corresponding measurement circuit.

The resistive water droplet sensor consists of two disconnected "conductive poles" made from "engraved copper sheets". The principle is to use the conductivity of rainwater to connect the two plates partially or fully, forming an equivalent resistance inversely proportional to the size of the rainwater. The working principle of the rain sensor is very simple. A series of inductive pads with exposed copper wires act together as a variable resistor (like a potentiometer) whose resistance varies according to the amount of water on its surface. This resistance is inversely proportional to the amount of water. More water on the surface means better conductivity and leads to a lower resistance. Less water on the surface means poorer conductivity and will result in a higher resistance. The sensor produces an output voltage based on the resistance and by measuring this you can determine if it is raining or not. In physics, resistance indicates the amount of resistance a conductor has to the current. The higher the resistance of a conductor, the greater the resistance of the conductor to the current. Resistance generally varies from conductor to conductor and is a property of the conductor itself. The resistance can be calculated by the equation:

$$R = \frac{\rho L}{S}$$

In this formula, ρ denotes the resistivity of the resistance, which is determined by its own properties, *L* denotes the length of the resistance and *S* denotes the cross-sectional area of the resistance)

And the relationship between resistance, current and voltage shown in this equation:

$$R = \frac{U}{I}$$

In this formula, *R* is the resistance, *I* is the current and *U* is the voltage.

The detection principle of the resistive water droplet sensor is that the change of the rainfall will cause the resistance value between the two points to be detected to change, and the magnitude of the rainfall can be obtained indirectly. Some conductive lines etched on the PCB when there is no waterdrop, the lines between the A and B point are insulated, and the resistance between A and B is very large; when there is a waterdrop, the conductive lines which are insulated from each other are connected by water, and the resistance between A and B is significantly reduced. Therefore, the size of the rain can be indirectly detected through detecting the size of the resistance. The detection principle is shown in Figure 5. (Tao Baoqi. 1993)

The image of the water droplet sensor shown in Figure 6 and the pins configuration is shown in Figure 7. The pin function is shown in Table 3. (Zhao Qiaoni, 2016, 35)

The datasheet and more information of the water droplet sensor can be found on the website. (Components 101 website)

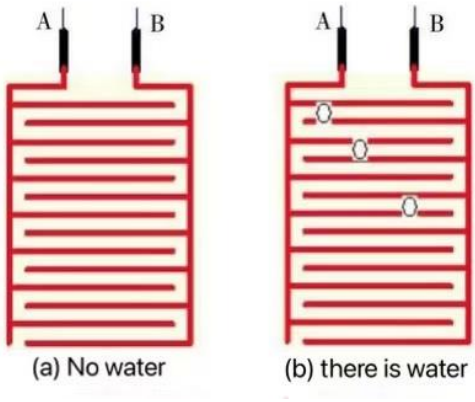

Figure 5. Resistive water droplet sensor (Zhao Qiaoni, 2016, 35 (16))

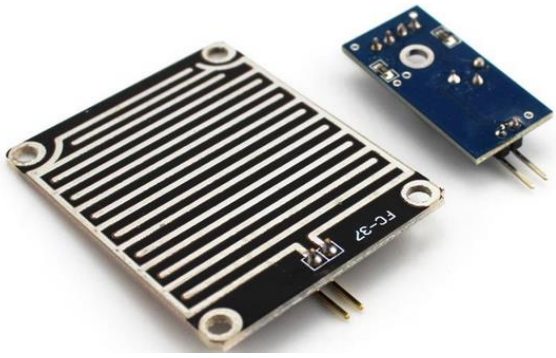

Figure 6. Image of water droplet sensor

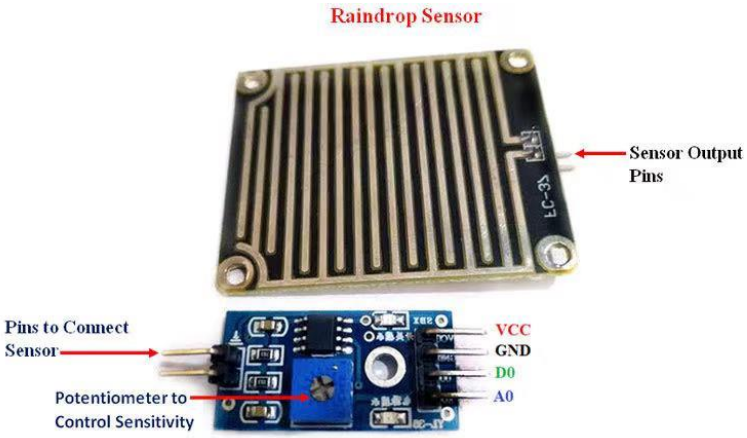

Figure 7. Pin configuration

Table 3. Pin functions

No.	Name	Function
1	VCC	Connects supply voltage- 5V
2	GND	Connected to ground
3	D0	Digital pin to get digital output
4	A0	Analog pin to get analog output

2.2.3 SIM900A GSM Modem

The SIM900A[16] is a compact and highly reliable wireless module. It adopts a dual-band GSM/GPRS [17] module in SMT [18] packaged and a powerful processor ARM926EJ-S[19] core, which can meet the development requirements of low-cost and compact size. It has powerful performance and customer applications can be built in. GSM/GPRS uses industry standard interface, which enables SIM900A with GSM/GPRS 900/1800MHz function to realize high-speed transmission of voice, SMS message, data and fax information with small size and low power consumption. SIM900A meets almost all the requirements of the water leak alarm system,

[16] "SIM900A GSM Module is the smallest and cheapest module for GPRS/GSM communication." (SIM900A GSM Module Pinout, Examples, Applications, Features, 2021)

[17] General Packet Radio Service (GPRS) is a "best-effort packet-switching protocol for wireless and cellular network communication services. It is considered best effort because all packets are given the same priority and the delivery of packets isn't guaranteed." (What is GPRS (General Packet Radio Services)? 2021)

[18] Surface Mount Technology (SMT) is a method of mounting electrical components directly onto the surface of a printed circuit board (PCB). (Surface-mount technology - Wikipedia, 2021)

[19] The ARM926EJ-S processor is "a member of ARM9 family of general-purpose microprocessors. This processor is targeted at multi-tasking applications where full memory management, high performance, low die size, and low power are all important." (ARM926EJ-S, 2021)

especially in its small, compact size. (Lin Haixiang, 2021(4)), (Zhang Qingli, Liu Jiangwei & Zhang Xin, 2016, 08)

The image of SIM900A shown in Figure 8 and Figure 9.

The datasheets and more information about SIM900A are attached at the end of the report and can be found on websites. The user manual of SIM900A GSM modem will attached at the Appendices. (SIMCom Wireless Solutions. 2010)

Figure 8. Image of SIM900A

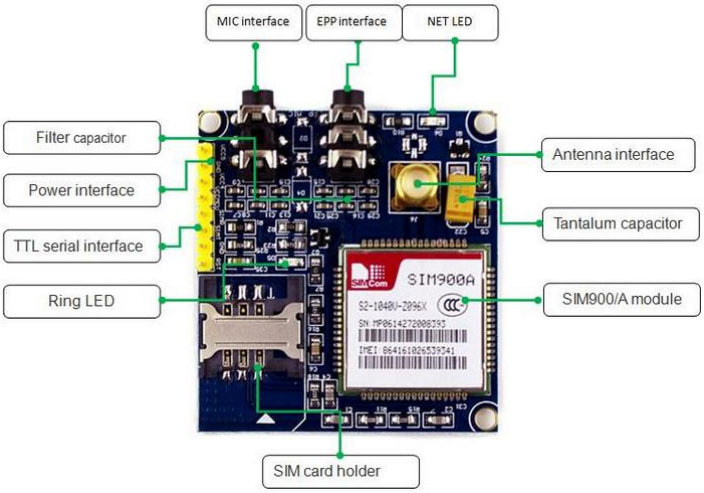

Figure 9. Detailed picture

2.3 Electric Circuit Connection

The water leak alarm system uses EasyEDA[20] to draw the circuit diagram. This tool has two main advantages, free and online. No need to install any software, the PCB design can be done by a browser. The whole circuit diagram drawn by Easy-EDA shown in Figure 10.

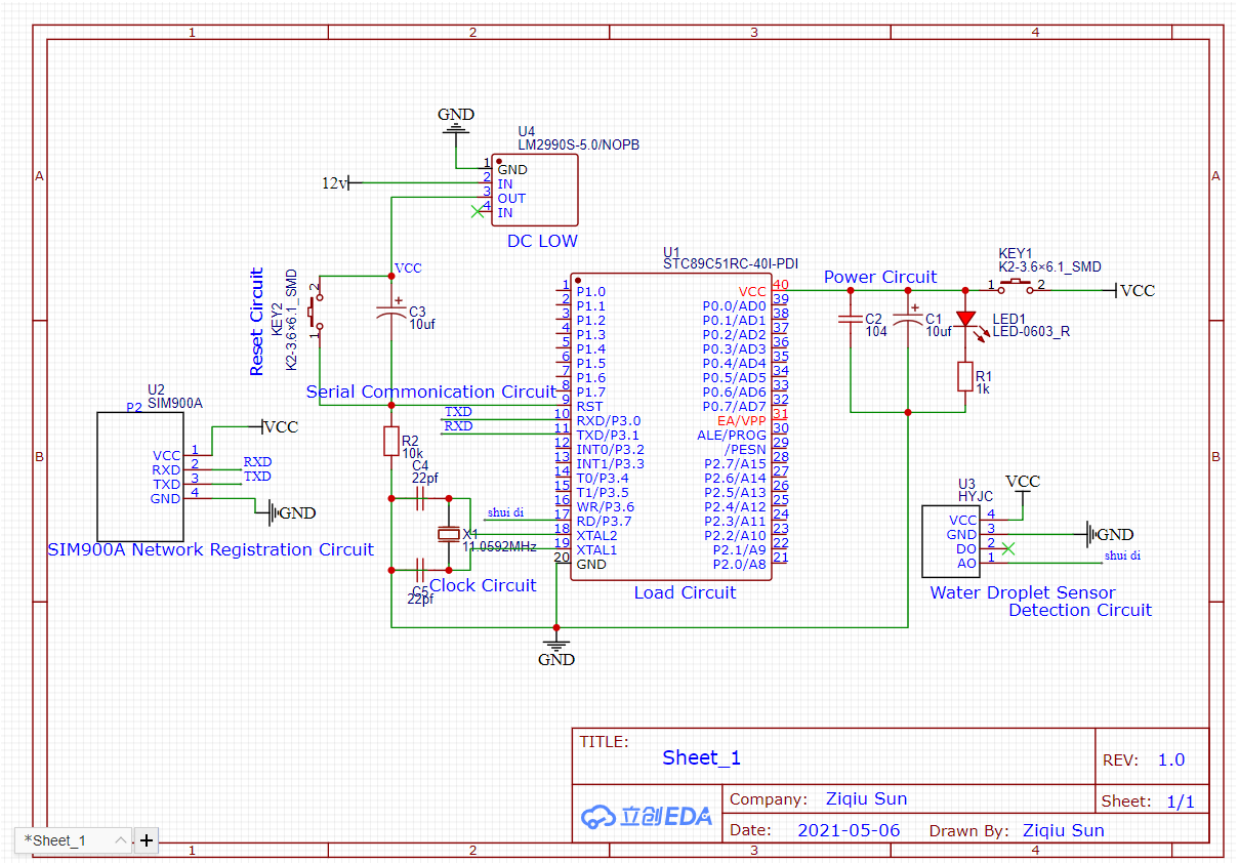

Figure 10. Whole circuit.

The hardware circuit of this system is divided into eight parts: STC89C52RC micro-controller clock circuit, reset circuit, load circuit, power circuit, water droplet sensor detection circuit, serial communication circuit, SIM900A network registration circuit, reducing voltage circuit.

---

[20] EasyEDA is a free and easy to use circuit design, circuit simulator and PCB design that runs in your web browser. (EasyEDA - Online PCB design & circuit simulator, 2021)

The circuit of STC89C52RC is obtained from the attached datasheet, shown in Figure 10. The whole circuit diagram is shown in Figure 11. Then the solder wire and the soldering iron are used to solder all microcontrollers and components as the following datasheets. And the whole circuits are connect via DuPont[21] wire cables. (Tan Shumei, 2018, 38)

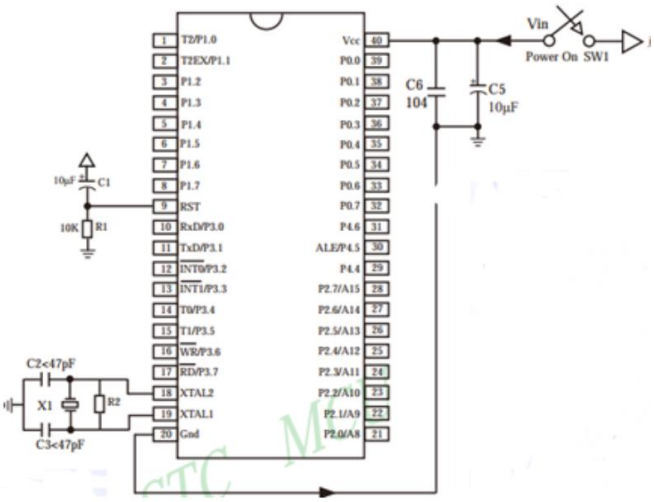

Figure 11. STC89C52RC power circuit

2.4 Software Design

2.4.1 Introduction of the Software

Keil C51, produced by Keil Software, has obvious advantages over assembly, mainly in terms of functionality, structure and readability, and maintainability, so it is easy to learn and easy to use. Keil has several complete development solutions, including a C compiler and linker, macro assembly, library management, emulation, and debugger, which are combined through an integrated development environment. What is more, Keil C51 is a large library of rich functions provided by this

[21] Dupont (Jumper Wire cables) are inexpensive and can be used to connect hardware such as sensors, Arduino boards and breadboards. Two types of connectors are available, male, and female, with a pitch of 2.54mm (100mm). (What is a DuPont wire? 2021)

software and is a highly functional debugging tool for integrated development. (Yu Bo & Ouyang Hongji. 2016, 19(11))

2.4.2 Programming

In order to control the whole circuit, after the water leak alarm system has been powered on the microcontroller, the program is first initialized, the SIM900A registers the network and the sensor begin to detect. Performed programming and determining the data sent from the serial port, process the signal received from the water droplet sensor and use the STC89C52RC for simple control of sending a text message. The program also contains the code to set the mobile phone number and the content of SMS message.

The compositions of software of the water leakage alarm system shown in Figure 12 and the process of the system shown in Figure 13. The code programmed by Keli, is shown in Figure 14, Figure 15, Figure 12.

All the code will be attached at the end of the thesis report.

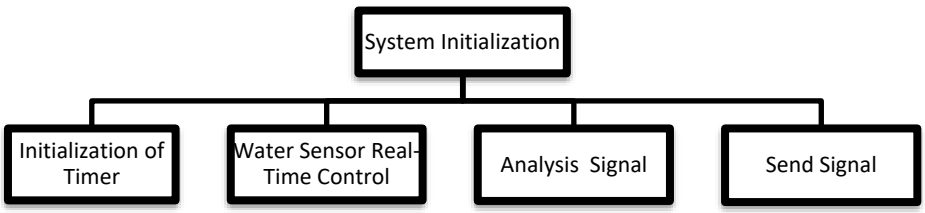

Figure 12. Composition of software of the system

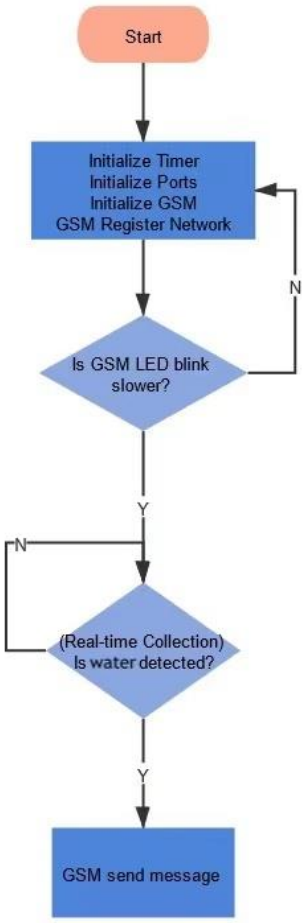

Figure 3. System Flowchart

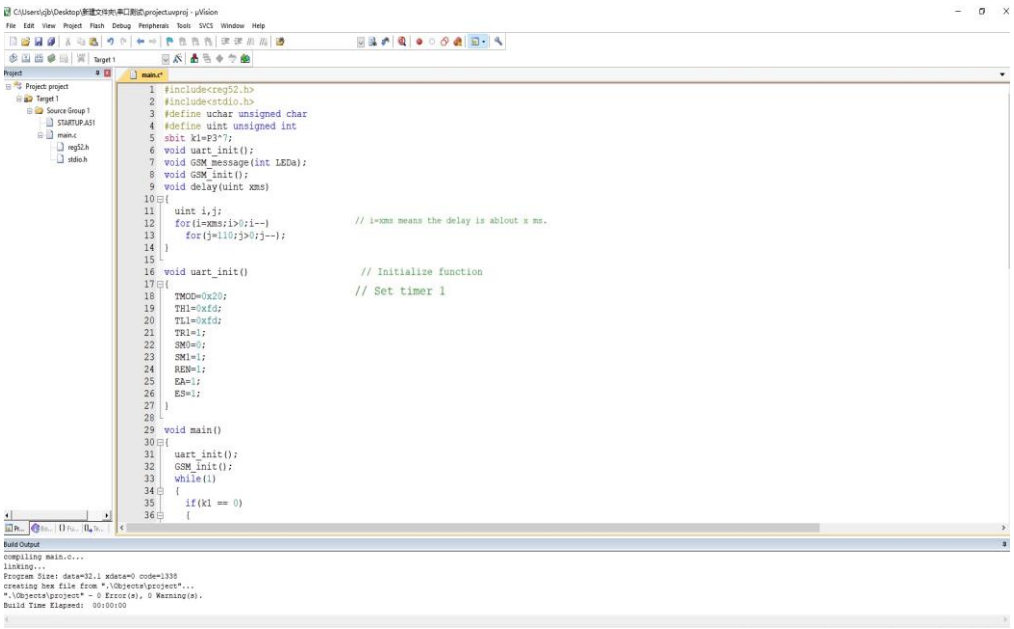

```
#include<reg52.h>
#include<stdio.h>
#define uchar unsigned char
#define uint unsigned int
sbit k1=P3^7;
void uart_init();
void GSM_message(int LEDa);
void GSM_init();
void delay(uint xms)
{
  uint i,j;
  for(i=xms;i>0;i--)                // i=xms means the delay is ablout x ms.
    for(j=110;j>0;j--);
}

void uart_init()                     // Initialize function
{                                   // Set timer 1
  TMOD=0x20;
  TH1=0xfd;
  TL1=0xfd;
  TR1=1;
  SM0=0;
  SM1=1;
  REN=1;
  EA=1;
  ES=1;
}

void main()
{
  uart_init();
  GSM_init();
  while(1)
  {
    if(k1 == 0)
    {
```

Figure 14. Screenshot of Keli

```c
#include<reg52.h>
#include<stdio.h>
#define uchar unsigned char
#define uint unsigned int
sbit k1=P3^7;
sbit led=P2^0;
void uart_init();
void GSM_message(int LEDa);
void GSM_init();
void delay(uint xms)
{
  uint i,j;
  for(i=xms;i>0;i--)        // i=xms means the delay is ablout x ms.
    for(j=110;j>0;j--);
}

void uart_init()          // Initialize function
{
  TMOD=0x20;              // Set timer 1
  TH1=0xfd;
  TL1=0xfd;
  TR1=1;
  SM0=0;
  SM1=1;
  REN=1;
  EA=1;
  ES=1;
}

void main()
{
```

Figure 4. Screenshot 1 of code

```c
}

void main()
{
  uart_init();
  GSM_init();
  while(1)
  {
    if(k1 == 0)
    {
  GSM_message(0);
  delay(500);

  GSM_message(1);
  delay(500);
    }
  }
}

void GSM_init()
{
  TI = 1;
  printf("AT\n");
  delay(1000);
  printf("AT\n");
  delay(1000);
  printf("AT+CSCS=\"GSM\"\n");
  delay(1000);
  TI = 0;

}
```

Figure 5. Screenshot 2 of code

```c
  delay(1000);
  printf("AT\n");
  delay(1000);
  printf("AT+CSCS=\"GSM\"\n");
  delay(1000);
  TI = 0;

}
void GSM_message(int LEDa)
{
  TI = 1;
  printf("AT+CMGS=\"15907133407\"\n");          // Set the phone number of the receiver
  delay(2000);                                  // Delay to ensures sending AT command successfully
  if(LEDa == 0)
    printf("WARNING!!!!!! The water leakage\n");   // Setting the content of the alarm SMS message
  else if(LEDa == 1)
  {
    led=0;
    printf("WARNING!!!!!! The water leakage\n");   // Setting if detect water, sending the SMS twice
  delay(500);
  }
    TI = 0;
  RI = 0;
  SBUF = 0x1a;
  while(!TI);
  TI = 0;

  while(!RI);
  RI = 0;
}
```

Figure 17. Screenshot 3 of code

3 DESCRIPTION OF THE SYSTEM OPERATION

The RF current required by the SIM900A antenna is relatively large, three 18650 batteries are used for power supply, but because the voltage generated by the three 18650 batteries(12V) is much higher than the standard operating voltage of STC89C52RC(5V). Therefore, a module adjusts the voltage to supply power to the STC89C52RC. In addition, to ensure that the SIM900A is successfully registered to the network first, the circuit is designed so that the SIM900A will give priority to the voltage.

The process of operate this water leak alarm system:

1. Insert the SIM phone card into the card slot of SIM900A.
2. Install three 18650 batteries to supply the power.
3. Observe the status of the lights D5 and D6 of SIM900A, Table 5.

Table 4. D5 and D6

D5	D6	Status of SIM900A GSM modem
Keep lighting	Flash fast	Keep searching network
Keep lighting	Flash slow	Already register network

After the flash of D6 light slow down.

4. Put the sensor into water.
5. After a few minutes later, the mobile will receive the water leak alarm SMS message. “WARNING!!!!!! The water leakage”.

   If the sensor stays in the water, the system will keep sending SMS message, until the sensor detects no water.
6. Power off by taking the batteries out.

4 CONCLUSION

Electricity is used everywhere in our lives, as a source of energy. It is closely related to people's lives and the operation of equipment. However, there are always two sides to a coin. Electricity can be beneficial and at the same time there are many hidden dangers. Improper use of electricity can lead to disaster. When electrical equipment breaks down, it can sometimes damage itself and often cause a fire. Water leakage is a huge hidden danger that causes domestic appliances to malfunction.

The thesis focuses on a water leak alarm system based on a microcontroller, which realizes the sending water leakage SMS message through the control of the whole circuit by the STC89C52RC microcontroller.

The system can be used in any electrical equipment where water leakage may occur internally or other areas where the leaks can cause damage.

5 ASSESSMENT

People are using more and more electronic devices and household appliances are a necessity in our daily lives. Electrical safety is particularly important. If the leak is not found in time, it is possible to cause electric shock or short-circuit failure. Furthermore, there is a high risk of these accidents causing a fire resulting in danger to life and damage to property. The main significance of this system is to guarantee the safety of electricity consumption. (Wang Rui, 2016)

Because of the practicality of the water leak alarm system, the popularity of this system is very high. And there are many water leak alarm systems being sold on the market. For the thesis system, all the components, circuits, wires, and batteries cost about 21 euros. After packing for the system, the costs might be 25 euros or 30 euros, which is lower than most of the leak alarm systems being sold. But if mass production of the system is required, the utilization of PCB is a better option, which is also known as printed circuit board. The so-called printed circuit board refers to the insulated substrate, selectively processed mounting holes, connecting wires and pads for assembly and welding of electronic components, in order to achieve the electrical connection between components of the assembly board. One of the advantages of printed circuit board PCB is that it can realize the electrical connection between various components in the circuit, instead of complex wiring, reducing the wiring workload in the traditional way, simplifying the assembly, welding, and debugging of electronic products. And PCB also can reduce the size of the whole machine, reduce the cost of the product, improve the quality and reliability of electronic equipment. The packaging is also very important and creative packaging can, in a way, increase the commercial value of the product.

REFERENCES

Amazon.com. 2021. Accessed 14 May 2021. https://www.amazon.com/WIN GO NEER -Sensor-Droplet-Detection-Arduino/dp /B06XHDZ3Q4 .

Bi Xianyun. 2013. Analysis on the Current Situation of Water Shortage in my country [J]. Heilongjiang Science and Technology Information.

Carrasco, D., 2021. Bit by Bit operations (Bitwise) - ElectroSoftCloud (AND, OR, XOR...). Accessed 14 May 2021. https://www.electrosoftcloud.com/en/bit-by-bit-operations-bitwise/ .

Chen Licheng, Liu Jiaming, Zhu Jinchun, Zheng Linfei. 2016(14),94+97. Discussion on the hazards of building water leakage and preventive measures [J]. Jiangxi Building Materials.

Components101. 2021. Rain drop Sensor Module Pinout, Datasheet & How to Use it in a Circuit. Accessed 14 May 2021. https://components101.com/sensors/rain-drop-sensor-module.

Easyeda.com. 2021. EasyEDA PCB design & circuit simulator. Accessed 14 May 2021. https://easyeda.com/.

Electronics Hub. 2021. 8051 Microcontroller Introduction, Basics and Features. Accessed 14 May 2021. https://www.electronicshub.org/8051-microcontroller-introduction/ .

Electronicsjmbh.blogspot.com. 2021. ARM926EJ-S. Accessed 14 May 2021. https:/-/electronicsjmbh.blogspot.com/2011/08/arm926ej-s.html.

ElProCus - Electronic Projects for Engineering Students. 2021. What are AT Commands: Different Types, and Their List. Accessed 14 May 2021. https://www.elprocus.com/at-commands-tutorial/.

En.wikipedia.org. 2021. Surface-mount technology - Wikipedia. Accessed 14 May 2021. https://en.wikipedia.org/wiki/Surface-mount_technology.

En.wikipedia.org. 2021. Random-access memory - Wikipedia. Accessed 14 May 2021. https://en.wikipedia.org/wiki/Random-access_memory.

Findanyanswer.com. 2021. What is a DuPont wire? Accessed 14 May 2021. https://findanyanswer.com/what-is-a-dupont-wire.

Huang Xiaozheng & Wu Huiming. 2001. The everlasting 51 series of single-chip microcomputers [J]. Measurement Technology, 2001(06): 34-37.

Intel. 2021. The Story of the Intel® 4004. Accessed 14 May 2021. https://www.intel.com/content/www/us/en/history/museum-story-of-intel-4004.html.

Lifewire. 2021. CMOS and CMOS Batteries: Everything You Need to Know. Accessed 14 May 2021. https://www.lifewire.com/what-is-cmos-2625826.

Lin Haixiang. The design of a gas leak alarm based on SIM900A [J]. 2021. Electronic Testing, 2021(04): 9-11.

Microcontrollers Lab. 2021. SIM900A GSM Module Pinout, Examples, Applications, Features. Accessed 14 May 2021. https://microcontrollerslab.com/sim900a-gsm-module-pinout-examples-applications-datasheet/.

Nowsms.com. 2021. What is a GSM Modem? Accessed 14 May 2021. https://nowsms.com/faq/what-is-a-gsm-modem.

Sciencedirect.com. 2021. Program Memory - an overview, ScienceDirect Topics. Accessed 14 May 2021. https://www.sciencedirect.com/topics/computer-science/program-memory.

SearchMobileComputing. 2021. What is GPRS (General Packet Radio Services)? Accessed 14 May 2021. https://searchmobilecomputing.techtarget.com/definition/GPRS.

SearchStorage. 2021. What is Flash Memory and How Does it Work? Accessed 14 May 2021. https://searchstorage.techtarget.com/definition/flash-memory .

SIMCom Wireless Solutions. 2010. SIM900A_HD_CN_V1.01 Hardware Device Manual. Accessed 14 May 2021. https://wenku.baidu.com/view/5778f9cdb94ae45c3b3567ec102de2bd9705de43.html.

STCMCU. 2011. STC89C51RC/RD+ Series MCU Device Manual. Accessed 14 May 2021.https://wenku.baidu.com/view/5778f9cdb94ae45c3b3567ec102de2bd9705de43.htm.

Tan Shumei. 2018. Design and Implementation of Smoke Alarm System Based on Single-chip Microcomputer [J]. Journal of Daqing Normal University, 2018,38(06): 40-41.

Tang Jiali, Yang Houchuan.2016. Easy introduction to 51 single chip microcomputer C language: with video tutorial [M]. Publishing House of Electronics Industry.

Tao Baoqi. 1993. Wang Ni. Resistance-strain transducers [M]. National Defense Industry Press.

Wang Rui.2016. An AOI design on PCB copper board surface defect detection[D]. Beijing University of Technology.

Yu Bo, Ouyang Hongji. 2016. Software design of smoke alarm based on STC89C52 microcontroller [J]. Software Engineering, 2016, 19(11): 14-16.

Zhang Qingli, Liu Jiangwei & Zhang Xin. 2016. Design of SMS Sending and Receiving System Based on SIM900A Module [J]. Electronic World,2016(08):152-153.

Zhao Qiaoni. 2016. A comparative study on the detection principle of raindrop sensors [J]. Value Engineering, 2016, 35 (16): 253-254.

Zhou Liang. Introduction to the advantages and disadvantages of 51 single-chip microcomputers and application areas. Accessed 14 May 2021. http://www.elecfans.com/emb/danpianji/20180910772848.html.

APPENDIX 1

General design schematic

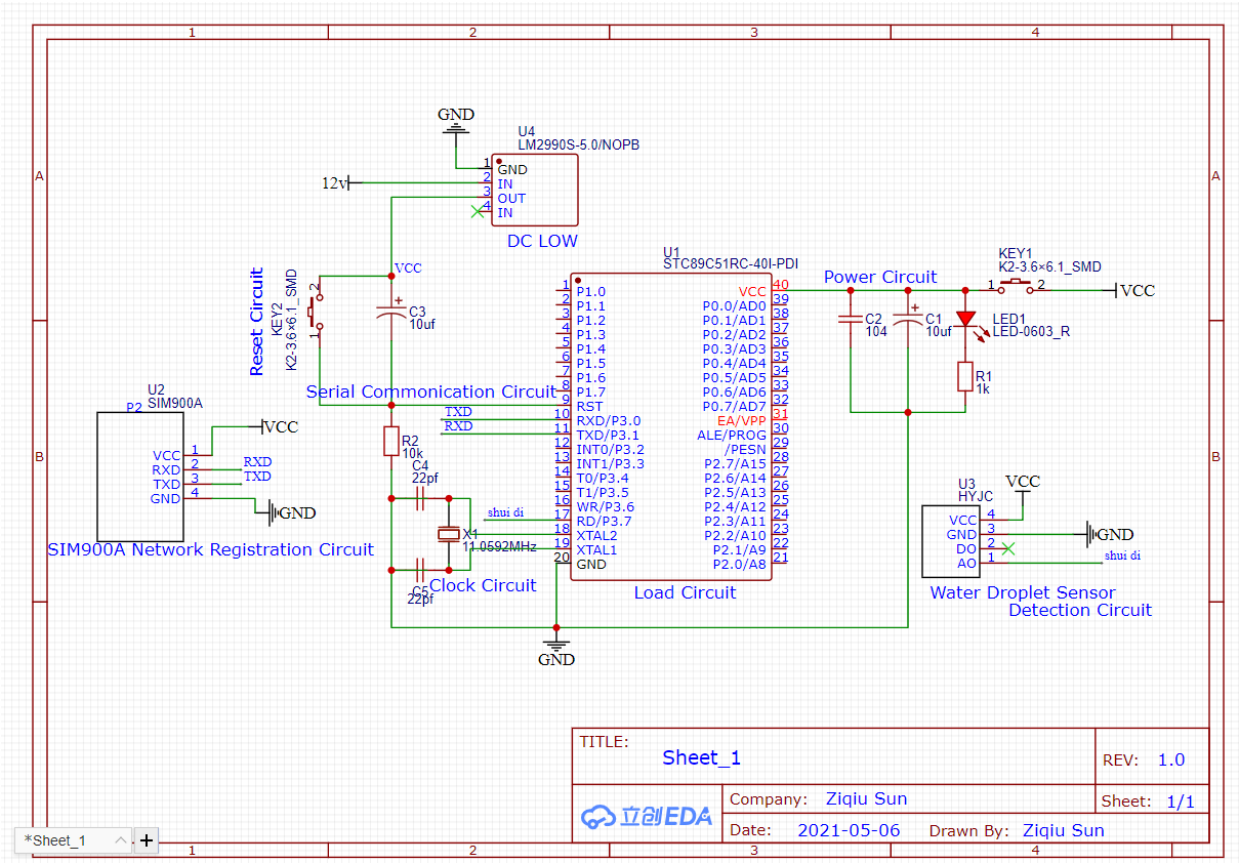

APPENDIX 2

Code

```
#include<reg52.h>

#include<stdio.h>

#define uchar unsigned char

#define uint unsigned int

sbit k1=P3^7;

sbit led=P2^0;

void uart_init ();

void GSM_message( int LEDa);

void GSM_init();

void delay( uint xms)

{

 uint i, j;

 for( i= xms; I > 0; i--)        // i= xms means the delay is ablout x ms.

  For (j= 110; j> 0; j--);

}
```

```
void uart_init()        // Initialize function
{
 TMOD= 0x20;      // Set timer 1
 TH1= 0xfd;
 TL1= 0xfd;
 TR1= 1;
 SM0= 0;
 SM1= 1;
 REN= 1;
 EA= 1;
 ES= 1;
}

void main()
{
  uart_init();
 GSM_init();
 while(1)
```

```
 {
  if( k1 == 0)
  {
 GSM_message(0);
 delay(500);


 GSM_message(1);
 delay(500);
  }
 }
}


void GSM_init()
{
 TI = 1;
 printf( "AT\n");
 delay( 1000);
 printf( "AT\n");
```

```
delay( 1000);

printf( "AT+CSCS=\"GSM\"\n");

delay( 1000);

TI = 0;



}

void GSM_message( int LEDa)

{

TI = 1;

printf( "AT+CMGS=\"15907133407\"\n");      // Set the phone number of the receiver

delay(2000);                               // Delay to ensures sending AT command successfully

if(LEDa == 0)

 printf( "WARNING!!!!!! The water leakage\n"); // Setting the content of the alarm SMS message

else if( LEDa == 1)

{

  led= 0;
```

```
 printf( "WARNING!!!!!! The water leakage\n"); // Setting if detect water, sending the SMS twice

delay(500);

}

 TI = 0;

RI = 0;

SBUF = 0x1a;

while(!TI);

TI = 0;



while(!RI);

RI = 0;

}
```

```c
#include<reg52.h>
#include<stdio.h>
#define uchar unsigned char
#define uint unsigned int
sbit k1=P3^7;
sbit led=P2^0;
void uart_init();
void GSM_message(int LEDa);
void GSM_init();
void delay(uint xms)
{
 uint i,j;
 for(i=xms;i>0;i--)          // i=xms means the delay is ablout x ms.
  for(j=110;j>0;j--);
}

void uart_init()          // Initialize function
{
 TMOD=0x20;       // Set timer 1
 TH1=0xfd;
 TL1=0xfd;
 TR1=1;
 SM0=0;
 SM1=1;
 REN=1;
 EA=1;
 ES=1;
}

void main()
{
  uart_init();
 GSM_init();
 while(1)
 {
  if(k1 == 0)
  {
```

```c
 {
  if(k1 == 0)
  {
 GSM_message(0);
 delay(500);

 GSM_message(1);
 delay(500);
  }
 }
}

void GSM_init()
{
 TI = 1;
 printf("AT\n");
 delay(1000);
 printf("AT\n");
 delay(1000);
 printf("AT+CSCS=\"GSM\"\n");
 delay(1000);
 TI = 0;

}
void GSM_message(int LEDa)
{
 TI = 1;
 printf("AT+CMGS=\"15907133407\"\n");      // Set the phone number of the receiver
 delay(2000);                              // Delay to ensures sending AT command successfully
 if(LEDa == 0)
  printf("WARNING!!!!!! The water leakage\n"); // Setting the content of the alarm SMS message
 else if(LEDa == 1)
 {
   led=0;
  printf("WARNING!!!!!! The water leakage\n"); // Setting if detect water, sending the SMS twice
 delay(500);
 }
```

```
 printf("WARNING!!!!!! The water leakage\n"); // Setting if detect water, sending the SMS twice
delay(500);
}
 TI = 0;
RI = 0;
SBUF = 0x1a;
while(!TI);
TI = 0;

while(!RI);
RI = 0;
}
```

e file length : 1.392 lines : 80 Ln : 69 Col : 2

APPENDIX 3

Datasheet of STC89C52RC

https://datasheetspdf.com/mobile/620042/ETC/STC89C52RC/1.

APPENDIX 4

Datasheet of SIM900A

https://components101.com/asset/sites/default/files/component_datasheet/SIM900A%20Datasheet.pdf

APPENDIX 5

User Manual of SIM900A

https://www.manualslib.com/manual/1230083/Research-Sim-900a.html

APPENDIX 6

Raindrop sensor module circuit diagram

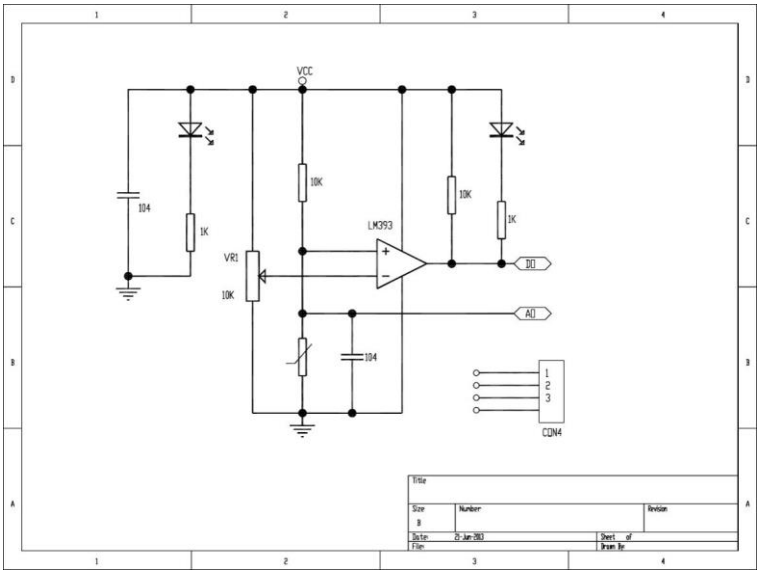

APPENDIX 7
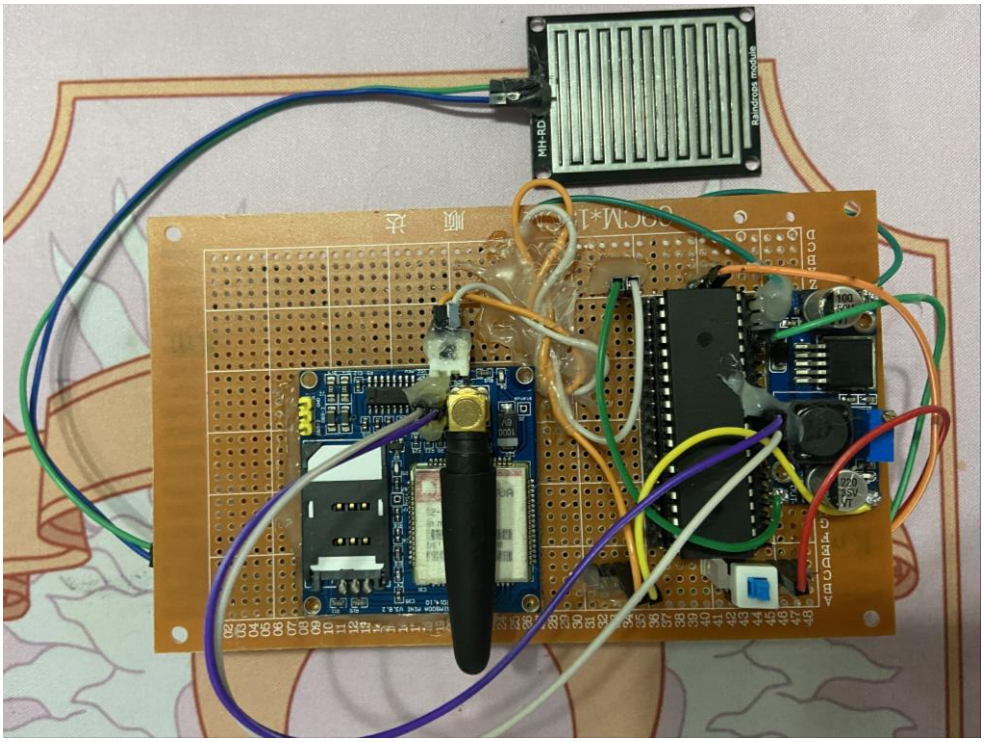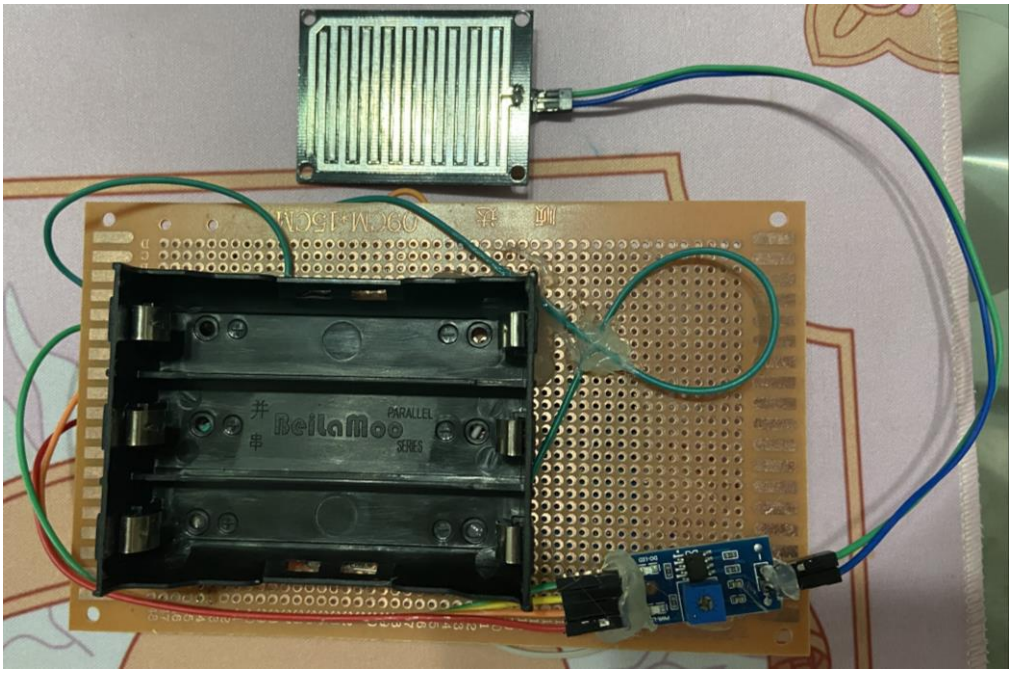
Photographs of the system