SAVONIA

University of Applied Sciences

THESIS – BACHELOR'S DEGREE PROGRAMME
TECHNOLOGY, COMMUNICATION AND TRANSPORT

HYBRID KILN

Gas & Electric fired Kiln

AUTHOR Matthias Christian Schütt

SAVONIA UNIVERSITY OF APPLIED SCIENCES

THESIS
Abstract

Field of Study Technology, Communication and Transport	
Degree Programme Degree Programme in Energy Engineering	
Author(s) Matthias Christian Schütt	
Title of Thesis Hybrid Kiln - Gas & Electric fired Kiln	
Date 28 April 2023	Pages/Appendices 48 / 4
Client Organisation /Partners CTB ceramic technology GmbH Berlin	

Abstract

The aim of this thesis was to study the performance of a hybrid kiln consisting of natural gas fired burners and electric heating elements made of molybdenum disilicide ($MoSi_2$). The thesis was commissioned by installing electric heating elements on an existing natural gas fired chamber kiln and examining the performance of this arrangement.

The production of technical ceramics in industry involves a very high expenditure of energy and resources. In view of the advancing climate change and the need to reduce CO2 emissions it is therefore important to refrain from the use of fossil fuels. This can be achieved by modern modes of operation based on regenerative energy sources. Approaches, such as the use of hydrogen as a fuel or electrically powered kiln are already in use but are not yet comparable with conventional furnace systems.

A combination of gas-fired firing processes supported by electric heating elements could optimize the ceramic production from both an ecological and an economic point of view. At low temperatures heat is transferred to the ware based on convective mechanism. Whereas at high temperatures above 900 °C the heat transfer through radiation becomes more dominant.

This thesis presents the basic functions of gas-fired kilns and electric heating systems. Besides the documentation for the installation of the electric heating elements their actual performance together with the gas burners is monitored.

As a result, the outcome of the experiment is presented and the actual ecological and economical improvement as well as the costs for such installation is evaluated.

Keywords
Hybrid kiln, Kanthal Super, CTB ceramic technology

Koulutusala Tekniikan ja liikenteen ala	
Tutkinto-ohjelma Energiatekniikan tutkinto-ohjelma	
Työn tekijä(t) Matthias Christian Schütt	
Työn nimi Hybrid Kiln - Gas & Electric fired Kiln	
Päiväys 28. huhtikuuta 2023	Sivumäärä/Liitteet 48 / 4
Toimeksiantaja/Yhteistyökumppani(t) CTB ceramic technology GmbH Berlin	

Tiivistelmä

Tämän opinnäytetyön tavoitteena oli tutkia maakaasupolttimesta ja molybdeenidisilisidistä ($MoSi_2$) valmistetuista sähkölämmityselementeistä koostuvan hybridiuunin suorituskykyä. Opinnäytetyö tehtiin asentamalla sähköiset lämmityselementit olemassa olevaan maakaasukäyttöiseen kammiouuniin ja tarkastelemalla tämän järjestelyn toimivuutta.

Teknisen keramiikan valmistukseen teollisuudessa käytetään paljon energiaa ja resursseja. Kun otetaan huomioon ilmastonmuutoksen eteneminen ja tarve vähentää hiilidioksidipäästöjä, on tärkeää pidättäytyä fossiilisten polttoaineiden käytöstä. Tämä voidaan saavuttaa nykyaikaisilla toimintatavoilla, jotka perustuvat uusiutuviin energialähteisiin. Tällaisia menetelmiä, kuten vedyn käyttö polttoaineena tai sähkökäyttöinen uuni, on jo käytössä, mutta ne eivät vielä ole verrattavissa perinteisiin uunijärjestelmiin.

Kaasukäyttöisen polttoprosessin yhdistelmä, jota tuetaan sähkölämmityselementeillä, voitaisiin optimoida keramiikkatuotannon sekä ekologisesta että taloudellisesta näkökulmasta. Matalissa lämpötiloissa lämpö siirtyy tuotteeseen konvektiomekanismin avulla. Kun taas lämpötiloissa korkeissa, yli 900 °C:n lämpötiloissa lämmönsiirto tapahtuu pääasiassa säteilyn avulla.

Tässä opinnäytetyössä esitellään kaasukäyttöisen uunin ja sähkölämmitysjärjestelmän perustoiminnot. Lämmityselementtien asennusta koskevien asiakirjojen lisäksi seurataan niiden todellista toimintaa yhdessä kaasupolttimen kanssa.

Tämän tuloksena esitellään kokeen tulos ja arvioidaan todellista ekologista ja taloudellista parannusta sekä tällaisen asennuksen kustannuksia.

Avainsanat
hybridiuuni, Kanthal Super, CTB ceramic technology

CONTENTS

1 INTRODUCTION 8
1.1 CTB ceramic technology GmbH Berlin 9
2 FIRING PROCESS 10
2.1 Mechanisms of heat transfer 10
2.1.1 Conduction 10
2.1.2 Convection 11
2.1.3 Radiation 11
3 BASIC STRUCTURE OF A GAS FIRED KILN 13
3.1 Safety devices on furnaces for gaseous or liquid fuels 14
3.1.1 Flame detector 14
3.1.2 Burner control unit (BCU) 14
3.2 Exhaust emissions 15
3.2.1 Formation of pollutants 15
3.2.2 Combustibles 16
3.3 Energy consumption of gas firing process 17
3.4 Efficiency of natural gas fired kiln. 17
4 ELECTRIC FIRED KILN 19
4.1 Types of electric heating elements 19
4.1.1 Metallic elements 19
4.1.2 Silicon carbide elements 20
4.1.3 Molybdenum disilicide 20
4.1.4 Zirconia elements 20
5 ELECTRIC HEATING ELEMENTS 21
5.1 Choice of Elements 21
5.1.1 Type of heating element 22
5.1.2 Terminal length 23
5.1.3 Length of heating zone 23
6 SETUP OF HYBRID KILN 26
6.1 Outline of the Kiln 26
6.2 Installation of Kanthal Super heating elements 27
6.2.1 Mounting of heating elements 28

6.2.2 Element power ... 29
6.2.3 Surface load ... 30
6.2.4 Wall loading ... 30
6.2.5 Maximum element temperature ... 31
6.2.6 Resistance at maximum element temperature ... 31
6.2.7 Element voltage and current ... 31
6.3 Electrical connection ... 32
6.3.1 Thyristor controller ... 33
6.3.2 Phase-angle firing ... 34
6.3.3 Transformer ... 34
7 FIRING PROCESS ... 36
7.1 Testing of Kanthal Super elements ... 36
7.2 Firing cycle ... 37
7.2.1 Nominal cubic meter ... 38
8 DATA ANALYZIS ... 39
8.1 Energy consumption ... 39
8.2 Emission ... 40
8.3 Firing costs ... 42
8.4 Installation cost for heating elements ... 43
8.5 Amortization of the investment ... 44
9 DISCUSSION ... 45
REFERENCES ... 46
APPENDIX 1: KANTHAL SUPER ELEMENT CALCULATION ... 48
APPENDIX 2: FURNACE POWER ... 49
APPENDIX 3: TEMPERATURE – LOADING DIAGRAM FOR KANTHAL SUPER ... 50
APPENDIX 4: CO_2 FACTORS OF ENERGY SOURCES ... 51

LIST OF FIGURES AND TABLES

FIGURE 1. Components of a gas fired burner with gas safety train. 13

FIGURE 2. Classification of emissions from combustion. 15

FIGURE 3. Energy balance of a gas fired kiln. 17

FIGURE 4. Efficiency vs. Exhaust Gas Inlet Temperature. 18

FIGURE 5. Straight element. 22

FIGURE 6. Element bent 90° at the terminals. 22

FIGURE 7. Installation parameters. 24

FIGURE 8. Deformation due to electro-magnetic force. 24

FIGURE 9. Distances required to balance the effects of electromagnetism on Kanthal Super elements. 25

FIGURE 10. Research kiln by CTB ceramic technology GmbH Berlin. 27

FIGURE 11. Layout of Kanthal Super elements inside the kiln. 28

FIGURE 12. Example of Two-shank holder. 29

FIGURE 13. Contact Strap. 29

FIGURE 14. Maximum recommended wall loading. 30

FIGURE 15. Three-wire open delta connection. 33

FIGURE 16. Thyristor controlled circuit. 33

FIGURE 17. Sine wave in phase-angle firing mode. 34

FIGURE 18. Transformer for heating element supply. 35

FIGURE 19. Refractory bricks loaded on supporting furniture inside the research kin. 36

FIGURE 20. Firing curve with the physico-chemical reactions that develop in traditional ceramic compositions. 37

FIGURE 21. Temperature profile during the firing process. 38

FIGURE 22. Power consumption of gas firing and hybrid firing mode. 40

FIGURE 23. CO_2 output of different firing modes. 41

FIGURE 24. NOx output of different firing modes. 42

FIGURE 25. Energy cost during firing cycle. 43

TABLE 1. Emissivity of different materials. 12

TABLE 2. Parameters for different Kanthal Super elements. 23

TABLE 3. Measured values for the different firing modes. 39

TABLE 4. Energy consumption. 40

TABLE 5. Prices for energy consumption during one firing cycle. 42

TABLE 6. Amortization time of investment. 44

LIST OF ABBREVIATIONS

BCU	burner control unit
CH_4	methane
CO_2	carbon dioxide
FMR	fluid flow regulator
HF	hydrogen fluoride
MFC	mass flow controller
Nm^3	nominal cubic meter
$MoSi_2$	Molybdenum disilicide
NOx	collective term for numerous gaseous oxides of nitrogen.
NO_2	Nitrogen dioxide
PLC	programmable logic controller
RMS	root mean square
SCFH	standard cubic feet per hour
SCR	silicon-controlled rectifier (thyristor)
SO_2	sulfur dioxide
SSiC	silicon carbide
SVE	standard volume exchange
TO	thermal oxidizer
VOC	volatile organic chemicals

1 INTRODUCTION

Industrial kilns, regardless of their areas of application, are very energy consuming. Here the source of energy plays a significant role when considering the ecological and economic aspects. Furnace systems can be heated in many ways. The needed form of heating source can be electrical energy, natural gas, biogas, oil, coal, wood, hydrogen, or any other burning material. The main fuels used in modern industrial kilns are still natural gas and fuel oil. (IPCC, 2023)

With the urgent need to reduce CO_2 emission from furnace systems the increasing use of electric heating is only natural. For kilns with electric heating elements the heat transfer is based on radiation. In gas fired kiln the heat transfer at low temperatures is based mainly on convective mechanism and at higher temperatures radiation is the dominant form of heat transfer, but at lower efficiency. In high temperature kilns, with temperatures required more than 1400 °C the temperature control of electric heating elements at low temperature is hardly possible. For some ceramic products, especially in the industrial and medical sector require precise temperature control during the firing process at all temperature levels. A promising approach to optimize ceramic production from an ecological and an economical point of view is the use of natural gas for the firing process supported by electric heating elements. With this approach, the advantages of both technologies can be optimally utilized and disadvantages avoided.

Heat transfer to the product in industrial furnaces is by convection and radiation. As the firing temperature increases, the proportion due to convection decreases, while the proportion due to radiation increases. Heat transfer at high temperatures above 900 °C takes place predominantly by thermal radiation. The heat flow through radiation is proportional to the difference in temperature in fourth power of the emitting and absorbing body. Whereas the heat flow by convection only to the simple difference of these temperatures. At low temperatures up to 600-900 °C natural gas fired burners could be used to remove organic binders from the product. The temperature can be easily regulated to the exact need. For elevated temperatures, during the sintering phase, the electrical heating can be used. This has the advantage that CO_2 and NOx emissions can be reduced, and the overall efficiency of the kiln can be increased.

Electric kilns consistently achieve higher thermal efficiency than fossil-powered kilns. Since electric kilns do not need to burn fuel to generate energy, there are no energy losses associated with heating the fuel to its combustion temperature — in other words, there is no energy lost in the combustion process. (Heirloom, 2023) The higher the firing temperature, the lower the efficiency of the gas burners, since more fuel has to be burned to achieve higher combustion temperature.

Within the scope of this work, a natural gas fired kiln was additionally equipped with electric heating elements to explore hybrid kiln operation and to draw an economic and ecological comparison between the different operating modes.

1.1 CTB ceramic technology GmbH Berlin

CTB ceramic technology GmbH Berlin is a small innovative company based in Berlin, which is specialized to design, build and install kilns for all thermal processes in the ceramics industry with temperatures up to 1800 °C as well as for research and development purposes. In its over 28 years of successful operating business, it has a proud history of realizing many projects from small research kilns to very large production kilns for the automobile industry. The company is working closely together with its customer to find very specific solutions that match the special needs of the customer. CTB is always interested in developing a customized firing solution. Besides the construction of new facilities, the company is also handling modernizations of older kilns, to accomplish energy savings, better environmental protection, new safety standards and other regulations. To the company's service belong also feasibility studies and firing simulations. (CTB, 2023)

2 FIRING PROCESS

The firing process can be defined as the process where ceramic powders and / or clay, which have been compacted, known as green body, are heated to the sintering temperature where product specific properties will be developed. The firing process encompasses chemical and physical changes in the ceramic body accompanied by loss of porosity and a subsequent increase of density. The compacted powder body becomes bonded together in a rigid matrix by vitrification which involves glass formation or by sintering where little or no liquid is present. (Bickley, 1994, p. 3)

As mentioned in the introduction different firing processes exist. The basic principle of natural gas- and oil-fired kilns is the same. The heat is produced by the combustion of a mixture of fuel and oxygen. For electric heating there are different ways to convert the electric energy into thermal energy, such as induction heating and resistance heating, which will be explained in chapter 4. Since this paper analyzes the economic sense of natural gas fired kiln in a combination with electrical heating elements as a hybrid kiln, other heating processes, such as oil or hydrogen fired methods are not handled.

2.1 Mechanisms of heat transfer

Heat transfer describes the flow of heat (thermal energy) due to temperature differences and the subsequent temperature distribution and changes. The study of transport phenomena concerns the exchange of momentum, energy, and mass in the form of conduction, convection, and radiation. These processes can be described via mathematical formulas. (SimScale Documentation, 2023)

2.1.1 Conduction

Thermal conduction is the diffusion of thermal energy (heat) within one material or between materials in contact. The higher temperature object has molecules with more kinetic energy; collisions between molecules distributions this kinetic energy until an object has the same thermal energy throughout. Conduction is the main mode of heat transfer between or inside solid materials. Buildings lose much of their heat by conduction through the wall to the outside environment. (Energy Education, 2023) For a finite wall with constant thermal conductivity or constant temperature gradient the equation for the heat flow is given in equation (1).

$$\dot{Q} = \lambda * A * \frac{(T_H - T_C)}{d} \tag{1}$$

where,

$\dot{Q}$ = heat transferred [W]

λ = thermal conductivity [W/(m K)]

A = surface area [m^2]

T_H = temperature hotter object [K]

T_C = temperature colder object [K]

d = thickness of the wall [m]

2.1.2 Convection

Convection is heat transfer through fluid (like air or water) motion. The difference between conduction and convection is the motion of a material carrier; convection is the movement of the thermal energy by moving hot fluid (as opposed to making other material hot by wiggling atoms). Usually, this motion occurs as a result of differences in density. Warmer particles are less dense, so particles with higher temperature will move to regions where the temperature is cooler and the particles with lower temperature will move to areas of higher temperature. The fluid will remain in motion until equilibrium is reached. (Energy Education, 2023) The rate of convective heat transfer is given in equation (2).

$$\dot{Q} = \alpha * A * (T_\infty - T_S) \tag{2}$$

where,

$\dot{Q}$ = heat transferred [W] or [J/s]

α = heat transfer coefficient [W / (m^2 K)]

A = surface area of the object [m^2]

T_∞ = temperature of the fluid [K]

T_S = temperature of the object [K]

2.1.3 Radiation

Heat transferred by radiation is called radiant heat. Like light, radiant heat is radiant energy, and does not necessarily require a medium to carry it. This form of energy transfer is facilitated through a type of electromagnetic radiation. All moving charged particles emit electromagnetic radiation. This emitted wave travels until it hits another particle. The particle that receives this radiation will receive it as kinetic energy. Particles will receive and emit radiation even after everything is at the same temperature, but it's not noticed due to the fact that the material is at equilibrium at this point. This type of heat transfer is particularly important in the setting the temperature of Earth. Radiation, as heat transfer, is how the Earth gets energy from the sun. Radiation is also important for the greenhouse effect. (Energy Education, 2023) The rate of convective heat transfer is given in equation (3).

$$\dot{Q} = A * \sigma * \varepsilon * (T_\infty^4 - T_S^4) \tag{3}$$

where,

$\dot{Q}$ = heat transferred [W] / [J/s]

A = surface area [m^2]

σ = Stefan-Boltzmann-constant [5,6704·10−8 W/(m^2 K4)]

ε = emissivity $0 \leq \varepsilon \leq 1$

T_∞ = ambient (emitting) temperature [K]

T_S = surface temperature of (absorbing) object [K]

The degree of emissivity ε is a physical quantity that depends on the material of the body as well as its surface texture and the wavelength λ. Examples of the emissivity of different substances are given in TABLE 1. (TU Ilmenau, 2023)

TABLE 1. Emissivity of different materials. (TU Ilmenau, 2023)

material	emissivity [ε]
aluminum, blank	0,05
copper, polished	0,03
copper, oxidized	0,5…0,8
paint color, white	0,9
paint color, black	0,98
water	0,96
steel, blank	0,22
steel, oxidized	0,33…0,76

3 BASIC STRUCTURE OF A GAS FIRED KILN

To ensure secure firing of gas fuel burners a gas safety train is mandatory. A gas control system, also called a gas safety train, contains different control and safety devices (see FIGURE 1) to achieve safe and defined combustion in the connected furnace. The mandatory devices for a gas safety train are the main shut-off valve (Nr. 1 in FIGURE 1) for disconnecting the natural gas supply. A filter (Nr. 2) is taking out unwanted particles from the gas. The pressure reducer (Nr. 3) is installed to ensure a constant gas pressure in front of the burner, regardless of changing primary pressures. If the gas pressure changes the gas and air ratio at the burner would change. Then an unstable flame or a very sooty combustion with CO formation can occur. If the secured gas supply pressure can be greater than the permissible operating pressure of the components of the gas train, then a safety shut-off valve (SSV) and safety pressure relief valve must also be installed upstream of the regulator. (Chemie-Schule, 2023)

The minimum and maximum permissible gas pressure must be monitored by pressure monitors (Nr. 4 and 5). A manual monitoring of the gas pressure must be provided as well (Nr. 6). During standstill or during pre-ventilation, no gas must get into the combustion chamber, otherwise a deflagration can occur. Therefore, the solenoid valves in the gas line must close securely. For safety reasons, there are two gas solenoid valves (Nr. 7), and the SPS sequence program checks whether the valves are tight through a gas tightness check (Nr. 8). The compensator (Nr. 9) is basically an elastic connection between the supplying gas line and the burner. The gas and air control valves (Nr. 10) regulate the amount of natural gas and combustion air flowing into the burner. To ensure that enough combustion air is provided a combustion air fan is needed (Nr. 11). The air pressure switch (Nr. 12) is monitoring the pressure provided by the combustion air fan. The flame control (Nr. 13) is explained in chapter 3.1.1. The nozzle (Nr. 14) converts between velocity and pressure.

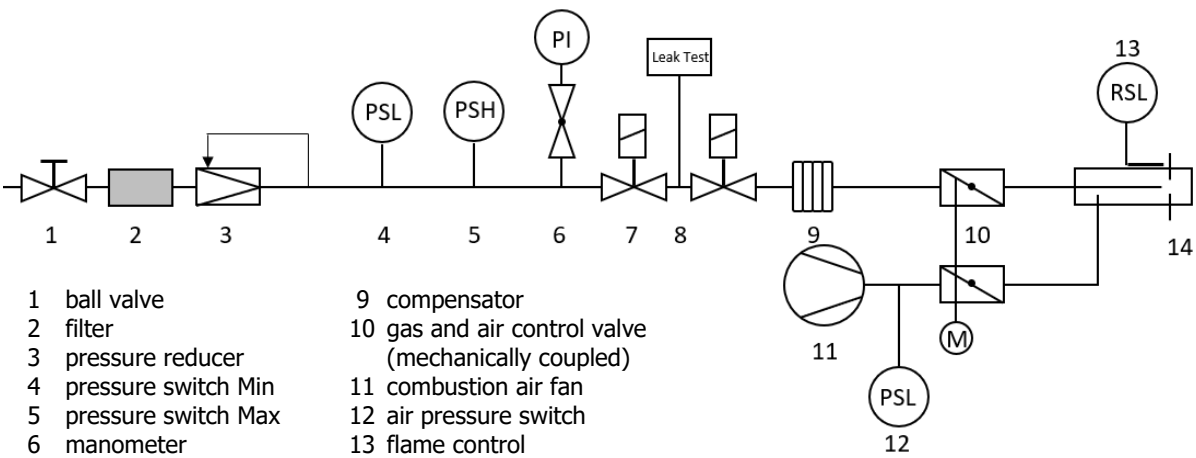

1 ball valve
2 filter
3 pressure reducer
4 pressure switch Min
5 pressure switch Max
6 manometer
7 magnetic valves (2 pcs)
8 leakage control device
9 compensator
10 gas and air control valve (mechanically coupled)
11 combustion air fan
12 air pressure switch
13 flame control
14 nozzle

FIGURE 1. Components of a gas fired burner with gas safety train. (Chemie-Schule, 2023)

Gas burners are equipped with a simple power control system (usually 2 levels), which is switched on or off. Continuously controlled burners (modulating burners) are predominantly used. The control

flaps for gas and air are mechanically coupled via rods (mechanical connection). The precise setting of the gas or air volume is carried out using a cam disk, which is set by the fitter at different load levels. The setting is made in such a way that there is always an excess air of approx. 5%. In the meantime, gas burners with electronic compounds are increasingly being used. Instead of the mechanical coupling of the control flaps, separate electrically operated control valves are used for the gas and air paths. To set the control valves, the opening angles for the optimal combustion parameters are determined for different outputs and entered the CPU for controlling the burner. (Chemie-Schule, 2023)

3.1 Safety devices on furnaces for gaseous or liquid fuels

Defects in furnaces can cause explosions. A gas accumulation in the combustion chamber that is ignited is particularly dangerous. A stoichiometric gas-oxygen mixture creates an explosion pressure of approximately 8 bar, which can destroy the combustion chamber and the exhaust gas ducts. (Chemie-Schule, 2023)

3.1.1 Flame detector

The flame monitor - also known as a flame sensor - has the function of monitoring the development of the flame. UV photodiodes can be used for oil and gas firing. Due to the high temperature in the flame, the gas is partially ionized and therefore has a measurable electrical conductivity. This is exploited in gas firing by inserting an insulated tungsten rod into the flame and measuring the current versus burner mass. (Chemie-Schule, 2023)

3.1.2 Burner control unit (BCU)

Gas and oil burners are controlled by a burner control unit that includes the following functions:

- Closing the safety quick-acting valves for the fuel if a safety-relevant limiter is triggered (e.g., lack of water, overpressure) or if the emergency stop button is pressed,
- Adhering to and monitoring pre-ventilation to purge unburned gases from the boiler,
- The flame monitor is connected to the burner control unit. If the flame signal is below a significant value, the safety quick-acting valves for the fuel must be closed within a specified safety time.
- The pressure monitors for min. gas pressure and min. combustion air are connected to the burner control. If the pressure is insufficient, the safety quick-acting valves must be closed.

The burner control monitors safety-relevant functions. If the fuel is released with no present flame, the entire flue gas space of a kiln is filled with an explosive gas-air mixture. Reignition at this point will result in a deflagration and possible destruction of the boiler. The burner control must therefore be construction unit-examined component-tested or pass through an individual test. Automatic burner controls for gas are tested in accordance with the EC Directive on gas appliances 90/396/EEC and bear the assigned CE mark. (Chemie-Schule, 2023)

3.2 Exhaust emissions

The exhaust emissions are the critical downside of a fuel fired combustion process. These emissions cause harm to the environment and people's health. Reducing them as much as possible is mandatory for a modern kiln. Combustibles in the form of smoke, sulfur in the form of SO_2, and fluorine in the form of hydrogen fluoride (HF) are the three most common types of pollutants that can emerge from a kiln. (Bickley, 1994, p. 14)

3.2.1 Formation of pollutants

The combustion of gaseous fuel is done by oxidation with oxygen or with the oxygen that is included in the combustion air. The following reaction scheme in equation (4) shows the pure methane-oxygen oxidation, whereas natural gas consists of 75-99 % methane.

$$CH_4 + 2\ O_2 \rightarrow CO_2 + 2\ H_2O \tag{4}$$

where,

CH_4 = methane

O_2 = oxygen

CO_2 = carbon dioxide

H_2O =water

The pollutants produced during a combustion process can be divided into 6 main groups according to FIGURE 2.

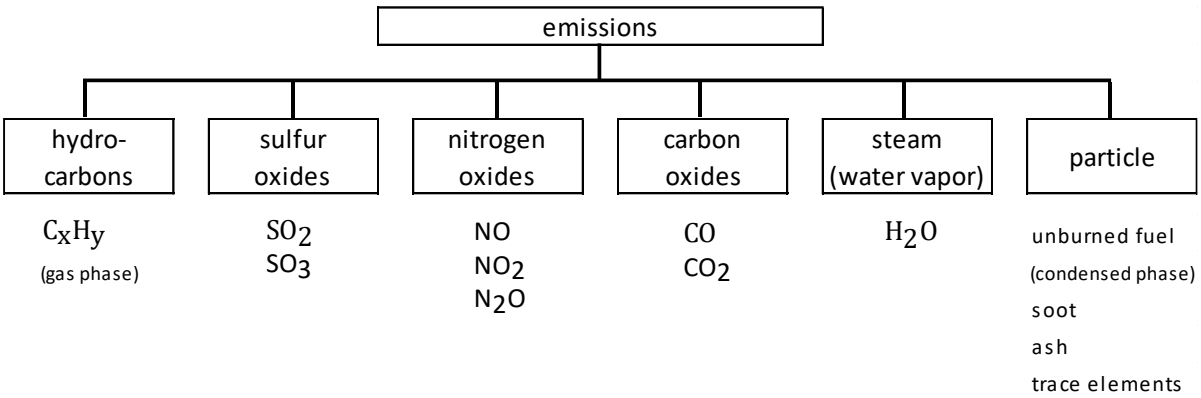

FIGURE 2. Classification of emissions from combustion. (Görner, 1992)

While hydrocarbons, sulfur oxides and particles are dependent on the product being burned, nitrogen oxides, carbon oxides and water vapor can usually be balanced for a burning process. Water vapor and carbon oxides are formed as products of the combustion reaction (see equation (4)). Thus, the emission can be calculated using the reaction equation. The nitrogen oxides can be divided into fuel NOx, prompt NOx and thermal NOx. The considered furnace systems are operated either with gaseous fuel only, or with electrical heating elements only, or both together in hybrid mod. The fuel NOx, as well as prompt NOx are not relevant, therefore only thermal NOx are stated.

The formation of thermal NOx is controlled by a number of strongly temperature dependent chemical reactions known as the Zeldovich mechanism. The main reactions causing the formation of thermal NOx from molecular nitrogen are the following:

$$O + N_2 \leftrightarrow N + NO \tag{5}$$

$$N + O_2 \leftrightarrow O + NO \tag{6}$$

$$N + OH \leftrightarrow H + NO \tag{7}$$

Nitrogen oxides affect the environment in various parts of the atmosphere. Under the influence of UV radiation and hydrocarbons, they make a significant contribution to the depletion of ozone (O_3) in the stratosphere and thus play a role in global warming as gases that affect the climate. In addition to the oxides of sulfur, nitrogen oxides are also responsible for the "acid rain" by contributing to the formation of the very aggressive nitric acid (HNO_3). They also contribute to the formation of smog. (BDH, 2020)

3.2.2 Combustibles

The most common types of pollutants coming out of kilns are combustibles. The combustibles are carbon, carbon monoxide and hydrogen; they all a result of organics volatizing out of the ceramic bodies. In order to follow air pollution standards, it is necessary to complete the oxidation process and convert the combustibles to carbon dioxide and water which are not pollutants:

$$C + O_2 \rightarrow CO_2 \tag{8}$$

$$2\ CO + O_2 \rightarrow 2\ CO_2 \tag{9}$$

$$4\ H + O_2 \rightarrow 2\ H_2O \tag{10}$$

Unfortunately, it is not possible to perform the above reactions in the kiln because the combustibles come off in the form of smoke in temperature range of 300-400 °C; however, the oxidation to CO_2 and H_2O does not occur until 650-700 °C is reached. Therefore, the most common way to eliminate the combustibles is with thermal oxidizer (TO) built into the flue or stack. The after burner heats the 300-400 °C exhaust gas in the presence of oxygen up to 650-700 °C so that the oxidation reactions can occur. As a general rule, a dwell time of the flue gas of 0,5 s in the thermal oxidizer zone can be set. Accordingly, the afterburner must be designed with sufficient internal volume and heating capacity according to the furnace size and the Standard Volume Exchanges (SVE) at low temperatures. TOs of this type are typically 99,9 % efficient in converting all combustibles. (Bickley, 1994, p. 14) Depending on the additives, wet scrubbers and adsorbers for sulfur and fluorine are required in the flue gas treatment. To reduce NOx emissions, it is also beneficial to return the cleaned exhaust gases to the furnace system to keep the flame temperature and the O_2 content low.

Standard Volume Exchanges (SVE) describes how often the internal kiln volume with a given flue gas volume flow is completely flooded within one our [1/h].

3.3 Energy consumption of gas firing process

FIGURE 3 shows a Sankey diagram of reheating furnace. It can be seen, that even with heat recovery the useful output energy that heats up the ware inside the kiln is only 30-60 % of input energy of the fuel. Not all industrial kilns have the capability to recycle energy by using the heat from the exhaust gas to preheat the combustion air.

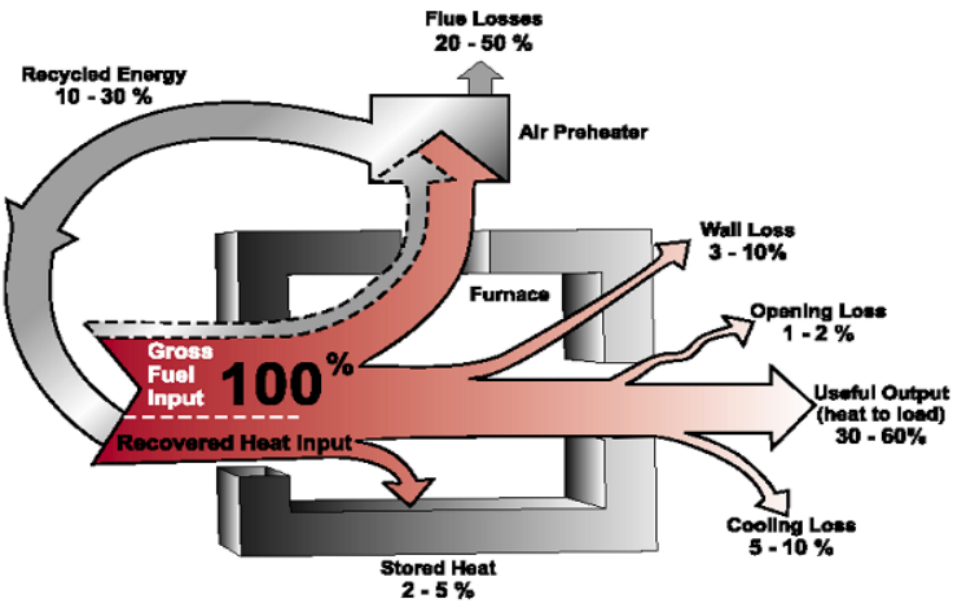

FIGURE 3. Energy balance of a gas fired kiln. (Bureau of Energy Efficiency, 2023)

3.4 Efficiency of natural gas fired kiln.

The heat transfer in natural gas fired is mainly by convection (see chapter 2.1.2). As already mentioned in the introduction chapter 1, at higher temperatures the heat transfer by radiation becomes dominant. The efficiency of how much heat is transferred by the flame of the natural gas burner is proportional to the temperature and the amount of air or the oxygen respectively. The graph depicted in FIGURE 4 shows combustion efficiency as a function of exhaust gas temperature. Additional influencing factors of the efficiency are the temperature of the combustion air and the amount of oxygen. The curve labeled $\varepsilon = 0$ in FIGURE 4 represents a cold air burner (i.e., no combustion air preheat). At a temperature of 1000 °C, the best possible efficiency for this type of burner is approximately 50 percent. (Mickey, 2019) At this this temperature the heating mode could be switched to the electrical heating elements, which emit heat by radiation could increase the efficiency of the firing process. Since all the radiated heat is absorbed by the good.

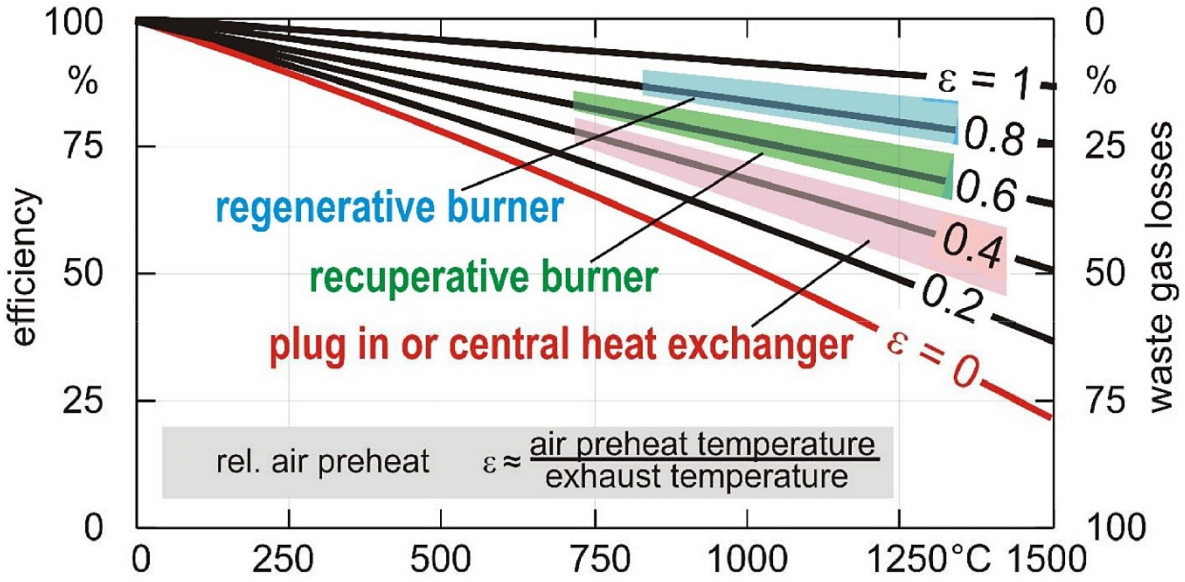

FIGURE 4. Efficiency vs. Exhaust Gas Inlet Temperature. (Mickey, 2019)

4 ELECTRIC FIRED KILN

There are many various methods to convert electrical energy onto heat. Here is a short description of the different energy conversion methods (Türk+Hillinger, 2018).

- Arc heating - - heat generated in the arc is transferred to the object. For example, welding.
- Induction heating - An alternating magnetic field induces eddy currents in the material to be heated, which then generates heat. For example, inductive melting or hardening.
- Dielectric heating - An alternating electric field generates eddy currents in the material to be heated, which heat the material. For example, Microwave.
- Resistance heating – This is the simplest and most common method in practice for heating. A distinction can be made between direct and indirect resistance heating.
    - In direct resistance heating, the electrical current is conducted through the object to be heated itself and generates the required heat there. For example, Resistance welding.
    - In indirect resistance heating, the electric current in a heating conductor generates heat, which is transferred to the object to be heated by heat transfer (see chapter 2.1). For example, annealing furnace, infrared heating.

With a few exceptions, indirect resistance heating is most frequently used to solve heating tasks. This will be also the choice for heating electrically the kiln discussed in this paper. The following chapter will discuss the different types indirect resistive heating elements used in the ceramic firing industry.

4.1 Types of electric heating elements

There are different heating elements for different temperature ranges available. They can be metallic or a combination of metal and ceramics.

4.1.1 Metallic elements

Metal elements are the most cost-effective choice, but they have the lowest temperature range for operation. Nickel-chrome (NiCr) elements can be utilized up to 1100 °C, while iron-chromium-aluminum alloys (Fe-Cr-Al) can withstand furnace temperatures up to 1300 °C. Despite its temperature restrictions, nickel-chromium (NiCr) offers exceptional hot strength, enabling the elements to be self-supporting. On the other hand, Fe-Cr-Al elements, with their comparatively weaker hot strength, generally require the assistance of ceramic tubes for support. Both types of metallic element benefit from a constant electrical resistance over time, eliminating the need for compensation adjustments as the elements age. Additionally, these metallic elements maintain constant resistance across all temperatures. This consistency in resistance allows for the use of an affordable on/off control system with these metallic elements. (Bickley, 1994, p. 67)

4.1.2 Silicon carbide elements

Silicon carbide elements are the most cost-effective heating options for temperatures ranging between 1300 and 1500 °C. These elements have the advantage of being self-supporting and can be installed horizontally. Generally produced in rod form, they have a hot central zone and two cold ends. The cold ends are infused with silicon metal, which ensures very low resistance and reduces power losses. Silicon carbide elements can operate at higher surface loadings (W/cm^2) compared to metallic elements, requiring fewer elements to achieve the same heat input. These elements are created by bonding grains together via a sintering process, which forms bridges between the grains and enables electrical current to flow through the element. Over time, the silicon carbide bridges oxidize into silica (SiO_2), a poor electrical conductor, causing the element's resistance to increase. This phenomenon is known as aging. Silicon carbide elements typically experience a fourfold increase in resistance over their lifetime. Their resistance also varies with temperature: it is relatively high at room temperature, reaches a minimum value at approximately 800 °C, and then increases as temperatures continue to rise. Due to the aging process and resistance changes, silicon carbide elements cannot utilize simple on/off controls. Instead, they require silicon-controlled rectifiers (SCR control). Although SCR control is more expensive than on/off control, it can accommodate the increased voltage as elements age and limit the current during the negative portion of the resistance curve. (Bickley, 1994, p. 68)

4.1.3 Molybdenum disilicide

Molybdenum disilicide ($MoSi_2$) is a cermet created through a powder metallurgical process, consisting of both ceramic and metallic components in the base material. Initially, this element material had a maximum temperature limit of 1700 °C, corresponding to a kiln maximum temperature of 1600 °C. However, advanced grades, such as Kanthal Super 1900, now permit element temperatures up to 1900 °C and kiln temperatures of 1800 °C. Molybdenum disilicide exhibits a significant increase in resistance from room temperature to operating temperature, typically ranging from 10 to 14 times higher. In contrast to silicon carbide, this material does not experience aging, and its resistance remains relatively constant throughout the element's lifespan. Due to the fluctuation in resistance with temperature, molybdenum disilicide elements require silicon-controlled rectifiers (SCR control) for power management, rather than simple on/off control. (Bickley, 1994, p. 69) In this project Kanthal Super heating elements made of molybdenum disilicide came into use.

4.1.4 Zirconia elements

Zirconia elements are the sole heating elements that can operate in air atmospheres at temperatures exceeding those of molybdenum disilicide elements. However, they have primarily been utilized in laboratory-sized kilns due to their limited availability in small sizes and high cost. Additionally, zirconia elements must be preheated to 1000 °C before they can even begin conducting heat. They can operate in kiln temperatures up to 2000 °C, and the use of silicon-controlled rectifiers (SCR controls) is necessary for their proper functioning. (Bickley, 1994, p. 71)

5 ELECTRIC HEATING ELEMENTS

As stated in chapter 4.1.3 molybdenum disilicide heating elements were used in this project. The leading manufacturer for these heating elements is Kanthal with its Brand Kanthal Super, a dense cermet material consisting of molybdenum disilicide ($MoSi_2$) and an oxide component, mainly a glass phase. Kanthal Super heating elements have the ability to withstand oxidation at high temperatures. This is due to the formation of a thin and adhesive protective layer of quartz glass on the surface. When $MoSi_2$ reacts with oxygen in the atmosphere, a layer of quartz glass (SiO_2) is formed and under this a thin layer of molybdenum silicide with a lower silicon content Mo_5Si_3. (Kanthal, 2022)

When Kanthal Super elements function at temperatures near 1200 °C, they become ductile. In contrast, at lower temperatures, the material exhibits increased brittleness, which means excessive amperage could generate electromagnetic forces substantial enough to break the element. The silica layer has a self-cleaning ability, removing attached impurities. When these impurities interact with silica, the melting point decreases. Consequently, the contaminated layer slides down the element and detaches. A fresh silica layer then forms spontaneously as the tainted layer flows down and drops off. (Kanthal, 2022)

5.1 Choice of Elements

The choice of elements was made in cooperation with the supplier of the Kanthal Super heating elements. Appendix 1 shows the calculation provided by the vendor. To decide the type of elements and the needed amount it is necessary to know the needed heating power. The needed power of the furnace can be determined in two ways. According to the actual charge and heat loss or according to the diagram in Appendix 2. Since the actual charge is not known, the option two applies. The equation (11) can be derived from the graph in Appendix 2 for calculating the needed electrical power based on the kiln max temperature and the internal volume.

$$P_{el} = \left(-81{,}451 + 0{,}091989 * T_{f,max}\ [°C]\right) * V_i[m^3]^{\left(0{,}031567+0{,}00015422*T_{f,max}\ [°C]\right)} \text{kW} \qquad (11)$$

where,

$T_{f,max}$ = maximum kiln temperature

V_i = furnace internal volume

The maximum kiln temperature is given with 1650 °C and the volume is 2,2 m^3 (see chapter 6.1). Inserting these numbers into equation (11) gives a result of P_{el}= 109,99 kW for the needed electrical power.

The heating elements should be standard sized, to avoid additional costs for customized heating elements. According to the supplier the most commonly used design is a two-shank U-shaped element, because they have the shortest terminal length and thus have the lowest resistance and in addition

the straight heating elements experience the least mechanical stress. The heating zone (L_e in FIGURE 5) is welded to terminals (L_u in FIGURE 5). These terminals normally have a diameter double that of the heating zone.

The implementation of straight heating elements was not possible, due to the construction of the research kiln, such as piping around the kiln and the construction of the outer shell. Therefore, fitting through the wall was done with the terminal bent 90° like shown in FIGURE 6.

5.1.1 Type of heating element

The maximum temperature of a heating element is usually 100 °C above the maximum operating temperature of the kiln. Since the research kiln is designed for temperature of 1650 °C the chosen heating element was the Kanthal Super 1800 element, which supports a maximum temperature of 1800 °C. The diameter of the connecting terminal (Ø c in FIGURE 5) was set to 12 mm. Thus, the diameter of the heating zone is 6 mm (Ø d in FIGURE 5). Bigger elements could provide more power but in they are much more expensive, because the price for the Kanthal Super elements corresponds to the amount of material used.

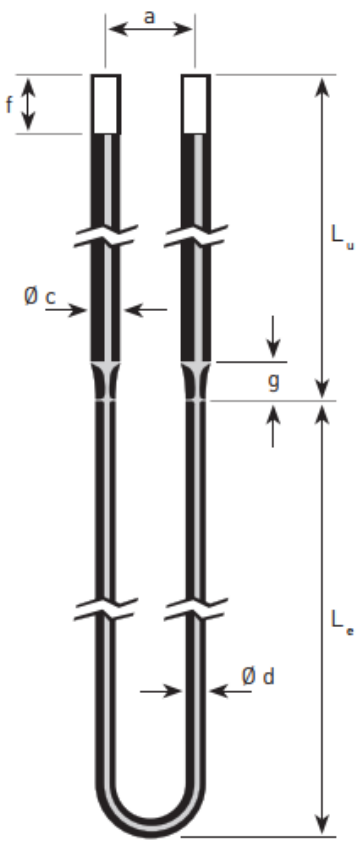

FIGURE 5. Straight element. (Kanthal, 2022)

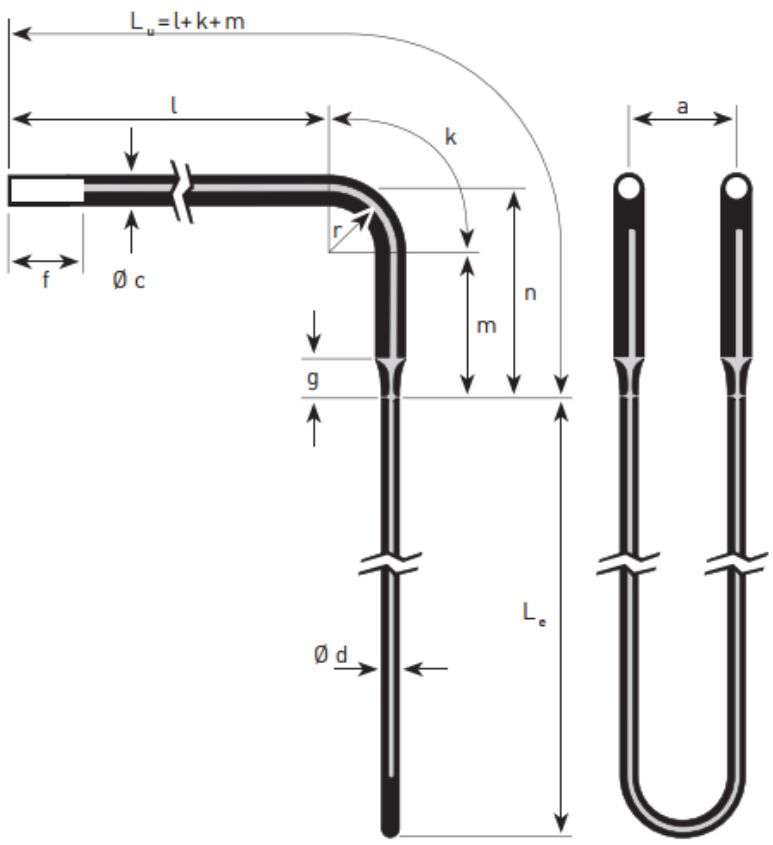

FIGURE 6. Element bent 90° at the terminals. (Kanthal, 2022)

5.1.2 Terminal length

For the determination of the terminal length (Lu in FIGURE 6) it is necessary to know the wall thickness of the kiln, which for the research kiln is 300 mm. The equation for calculating the minimum terminal length for elements with 90° bent terminal is:

$$L_{u,\,min} = l + k + m \tag{12}$$

For a 6/12 heating element it follows from TABLE 2 that k = 47 mm and m = 60 mm. The dimension of l depends on the wall thickness and on the structural attachment to the outside of the kiln. For the research kiln the needed length is l = 483 mm, which means that the total termination length is Lu= 590 mm. The labelling letters in the text above and in TABLE 2 are based on the labelling letters in FIGURE 6

TABLE 2. Parameters for different Kanthal Super elements.

element size	a [mm] stand.	a [mm] min.	c [mm]	d [mm]	f [mm]	g [mm]	$k_{90°}$ [mm]	$k_{45°}$ [mm]	m [mm]	n [mm] stand.	n [mm] min.	r [mm] stand.	r [mm] min.
3/9	25	16	6	3	25	15	19	9	30	42	30	12	
4/9	25	19	9	4	25	15	19	9	35	47	42	12	
6/12	50	26	12	6	45	25	47	24	60	90	70	30	20
9/18	60	38	18	9	75	30	71	35	90	135	100	45	30
12/24	80	54	24	12	100	40							

Dimensional tolerances ± 5% (except c and d)

5.1.3 Length of heating zone

The length of the heating zone depends on the inner height (h) of the combustion chamber. Additionally, there should be a distance to the bottom of:

$$h \geq \frac{L_e}{20} \tag{13}$$

The minimum distance to the bottom should at least 10 mm to prevent the elements from coming into contact with any material deposited on the bottom of the furnace and to compensate for the elongation of the elements at high temperatures. Because the elements cannot be mounted directly under the ceiling of the combustion chamber and the fact that 90° bended elements are used, the chosen length for heating zone of the Kanthal Super elements is 850 mm.

Additionally, the distance between wall and heating zone of the element must be large enough to avoid contact and thus causing damage. Especially when having long elements at high temperatures the electro-magnetic forces and bad centring can cause problems if the distance is too small.

The minimum distance, between the heating zone of the element and the furnace walls depends on the length of the element, as seen in FIGURE 7. When installed along the wall it is:

- L_e < 1000 mm; e = Le/20
- L_e < 300 mm; e = min. 15 mm
- L_e > 1000 mm; e = min. 50 mm

As the Heating zone length (Le in FIGURE 6) is 850 mm the distance to the wall must be 42,5 mm (850 mm / 20).

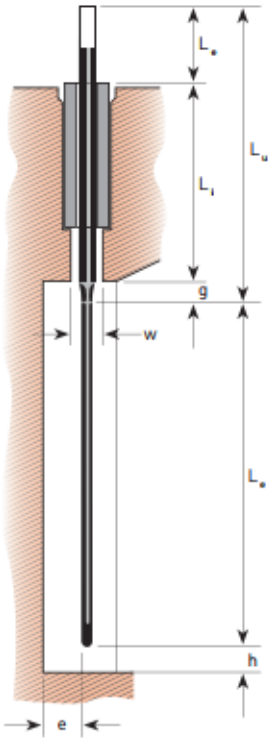

FIGURE 7. Installation parameters. (Kanthal, 2022)

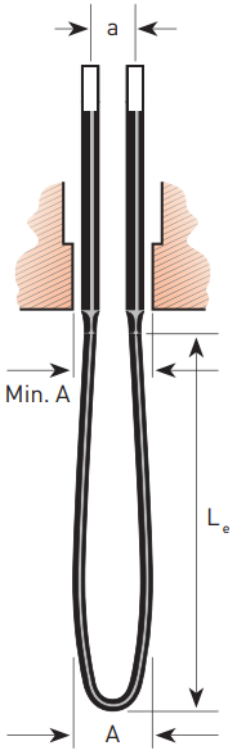

FIGURE 8. Deformation due to electro-magnetic force. (Kanthal, 2022)

Also, the Kanthal Super elements need to have a minimum distance from each other because of the deformation due to the electro-magnetic forces. The reason is that the deformation causes reduction in distance between the elements (KANTHAL AB, 1999). The necessary distance can be obtained from FIGURE 9. For the chosen elements the distance would be around 1,65 times the distance between the rods of the KANTHAL SUPER elements, which is 60 mm. Hence the needed distance from element to element is 99 mm (60 mm x 1,65). The actual distance between the elements in the setup is 150 mm. FIGURE 8 shows a deformed KANTHAL SUPER element because of electro-magnetic force.

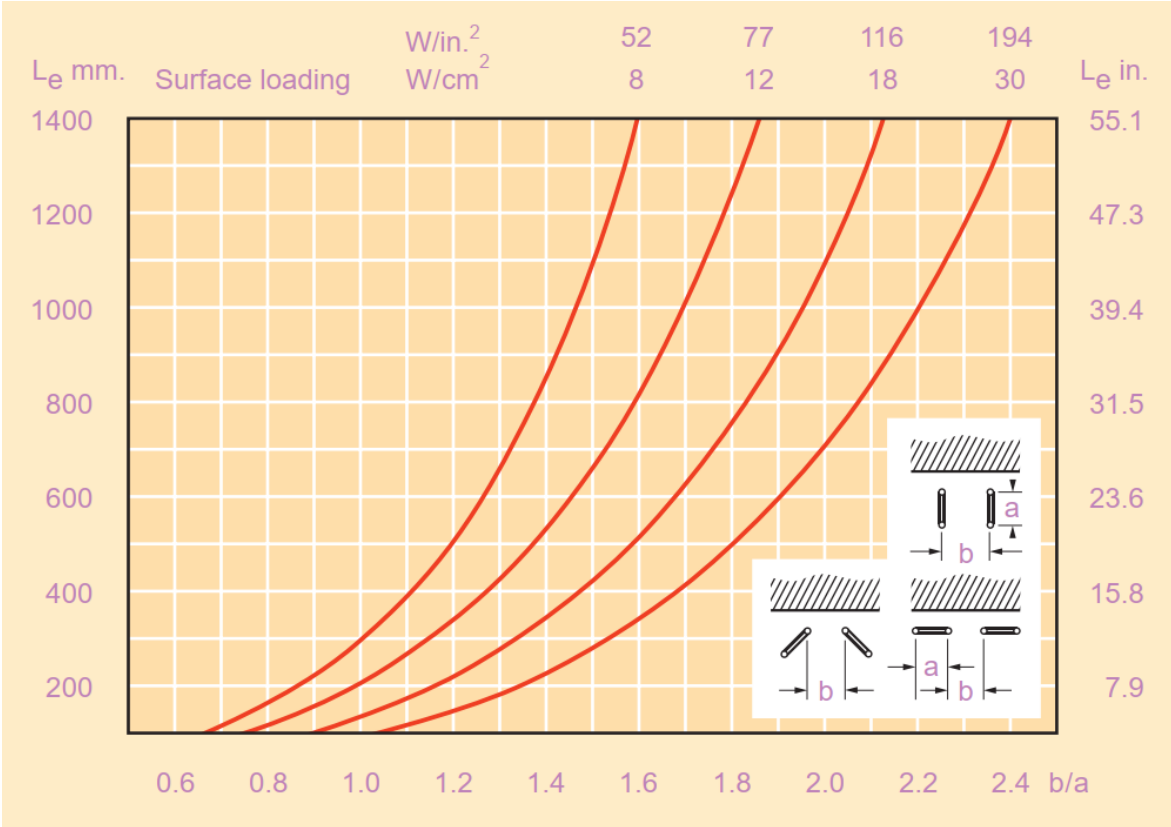

FIGURE 9. Distances required to balance the effects of electromagnetism on Kanthal Super elements. (KANTHAL AB, 1999)

6 SETUP OF HYBRID KILN

Thee kiln, where the heating elements are implemented, was already equipped with gas fired burners and fully functional. To avoid major changes in the construction the physical changes at the kiln had to be as least as possible. The only necessary changes were minor rearrangement of the gas supply line and the installation of additional thermocouples for monitoring the temperature of the Kanthal Super heating elements.

6.1 Outline of the Kiln

The kiln for implementing the heating elements is located at the premises of CTB ceramic technology GmbH in Berlin. It is a chamber research kiln used for experiments and testing devices. Additional it is possible to handle firing of any ceramic products up to 1650 °C for commercial customers. The kiln is equipped with 4 CTB True Blue Burners with integrated pilot burner and secondary air connection, each having a maximum power of 60 kW. They are connected in pairs on the side wall. Each burner is controlled by a separate BCU. To each burner belongs a gas valve and a combustion air valve. In addition to these two actuators, there are also secondary gas valves, which feed an additional gas mixture into the furnace chamber, consisting of oxygen and nitrogen. The needed amount of gas is controlled by a mass flow controller (MFC). The air flow as well as the amount of secondary gas is controlled by a process controller or fluid flow regulator (FMR). The air is supplied by a combustion air fan, which provides the needed air pressure. Each burner has its own thermocouple type S for the temperature control together with additional temperature sensors which monitor the overall kiln temperature. The flue gas produced during combustion is extracted through a flue gas exhaust duct under-neath the kiln by an exhaust fan. Before the exhaust gas is polluted into the air through a chimney it is guided through a thermal oxidizer (TO) which decomposes hazardous gases and volatile organic chemicals (VOC). The firring chamber has following dimension: width = 1530 mm, depth = 1306 mm and height = 1100 mm. The refractory lining is done with high temperature insulation polycrystalline wool with a wall thickness of 300 mm. It is an ultra-lightweight insulation material that, due to its properties, provides highly efficient thermal insulation. The brand name is Altra® provided by RATH Group.

The kiln is controlled and regulated by a process control system using programmable logic controllers (PLCs) at the field level. Through implemented control algorithms of the PLC, the output of each burner is controlled individually. Additionally, the furnace atmosphere is controlled. An oxygen concentration sensor detects the oxygen content of the furnace chamber. The gas amount, the secondary gas quantity, the secondary gas mixing ratio and the combustion air are influenced by the control. A picture of the kiln can be seen in FIGURE 10.

FIGURE 10. Research kiln by CTB ceramic technology GmbH Berlin.

6.2 Installation of Kanthal Super heating elements

Before the installation, the needed amount of Kanthal Super heating elements has to be determined. In chapter 5.1 was already stated that 90° bent heating elements came into use. The needed amount depends on the kiln size and the number of elements should be integer multiple of three to have a balanced load on the three-phase network. With the help of tables in the Kanthal Super handbook provided by the vendor the suitable amount of heating elements can be interpo-

lated. In this case the necessary calculations for this project were done in cooperation with the vendor. The selected number of heating elements was 24, which includes the fact that the number can be divided by three for a balanced load. The layout of the Kanthal Super heating elements inside the kiln is shown in FIGURE 11.

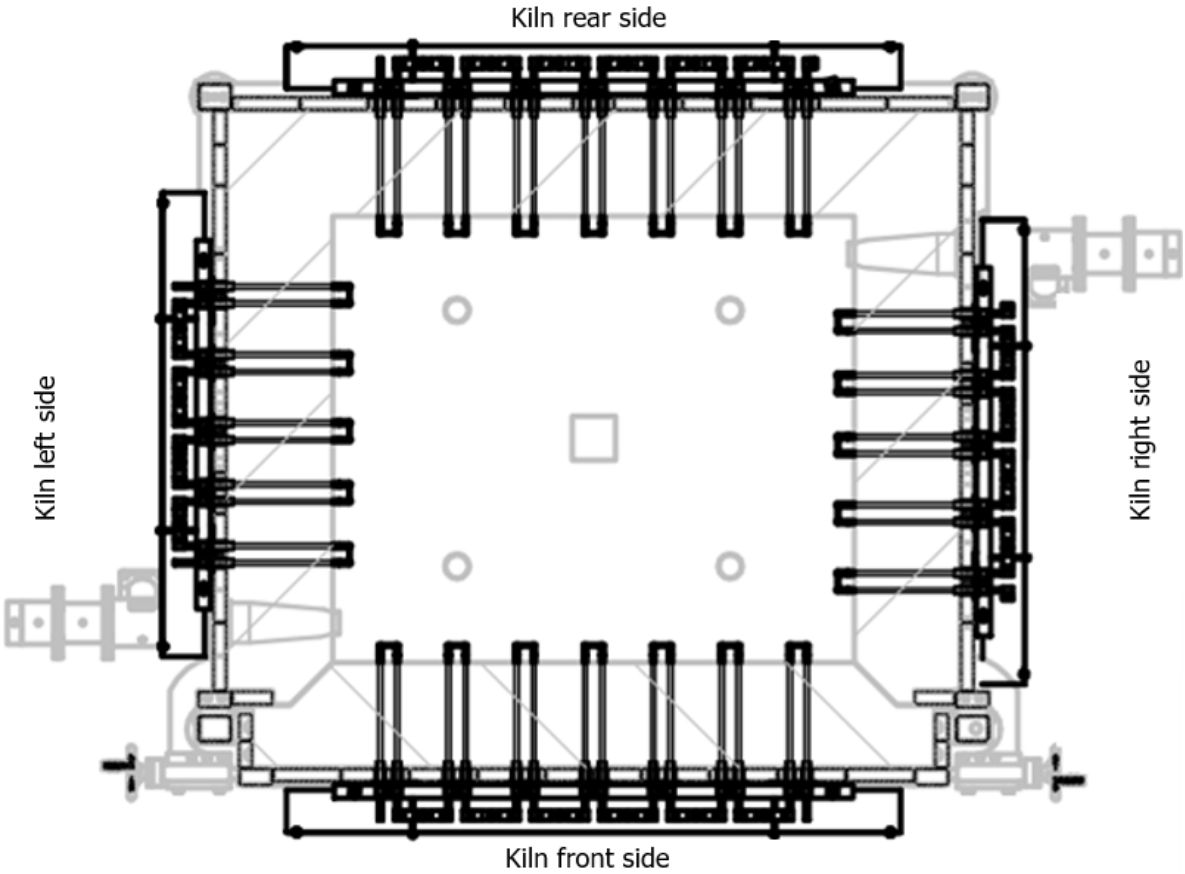

FIGURE 11. Layout of Kanthal Super elements inside the kiln. (CTB, 2022)

6.2.1 Mounting of heating elements

The mounting to the Kanthal Super elements involved a certain amount of preparation of the research kiln. At first the holes had to be drilled into the kiln wall. Through these wholes the terminal end of the heating elements was led, protected by a ceramic tube. On the outer shell of the kiln were supporting metal angle rails mounted to hold the heating elements with the help of shank holder (FIGURE 12).

FIGURE 12. Example of Two-shank holder. (Kanthal, 2022)

Electrical connections between the supply cable and heating elements are achieved using contact straps. These consist of double-folded aluminum braids (see FIGURE 13) hat securely fasten around the aluminized terminal end with a screw clamp. It is crucial to prevent any mechanical stress from being transmitted to the elements via the aluminum braids. Thus, the braid should be longer than the straight distance between the element and the busbar. When tightening bolts at the element terminal, it is essential to ensure the terminal isn't twisted or bent. (Kanthal, 2022)

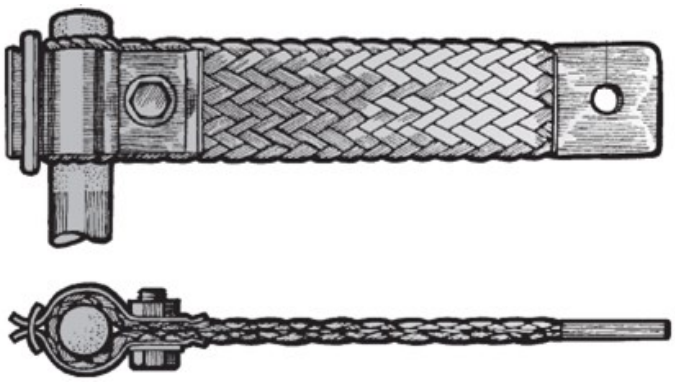

FIGURE 13. Contact Strap. (Kanthal, 2022)

6.2.2 Element power

The power per element can be obtained by dividing the total electrical power by the number of elements. See equation (14). The same data can be obtained from Appendix 1.

$$P_e = \frac{P}{n} = \frac{109{,}8\ \mathrm{W}}{24} = 4573\ \mathrm{W} \tag{14}$$

6.2.3 Surface load

The element surface load at various furnace temperatures as well as the maximum element temperature can be obtained from the graph in Appendix 3. With the calculation in equation (15) can be either confirmed or rejected the planned layout of the heating elements.

$$P = \frac{P_e}{P_{e,tab}} * P_{tab} = \frac{4573\ \mathrm{W}}{4366\ \mathrm{W}} * 12 \frac{\mathrm{W}}{\mathrm{cm}^2} = 12{,}57\ \frac{\mathrm{W}}{\mathrm{cm}^2} \tag{15}$$

The value of 12,75 W/cm^2 is slightly above the nominal value for Kanthal Super 1800 elements of 12 W/cm^2. A too high surface load would result in a reduced lifetime of the heating elements.

6.2.4 Wall loading

Furnaces fitted with Kanthal Super elements exhibit a distinct feature where the surface load on the furnace walls can be significantly higher than with metallic elements. This is attributed to the high maximum operating temperature of Kanthal Super elements, which allows for a substantial reduction in heating-up time. The wall loading depends on the elements' installation orientation, either along the walls or perpendicular to them. The chart in FIGURE 14 present the maximum recommended wall loading as a function of furnace temperature for various element diameters installed along the wall. (Kanthal, 2022)

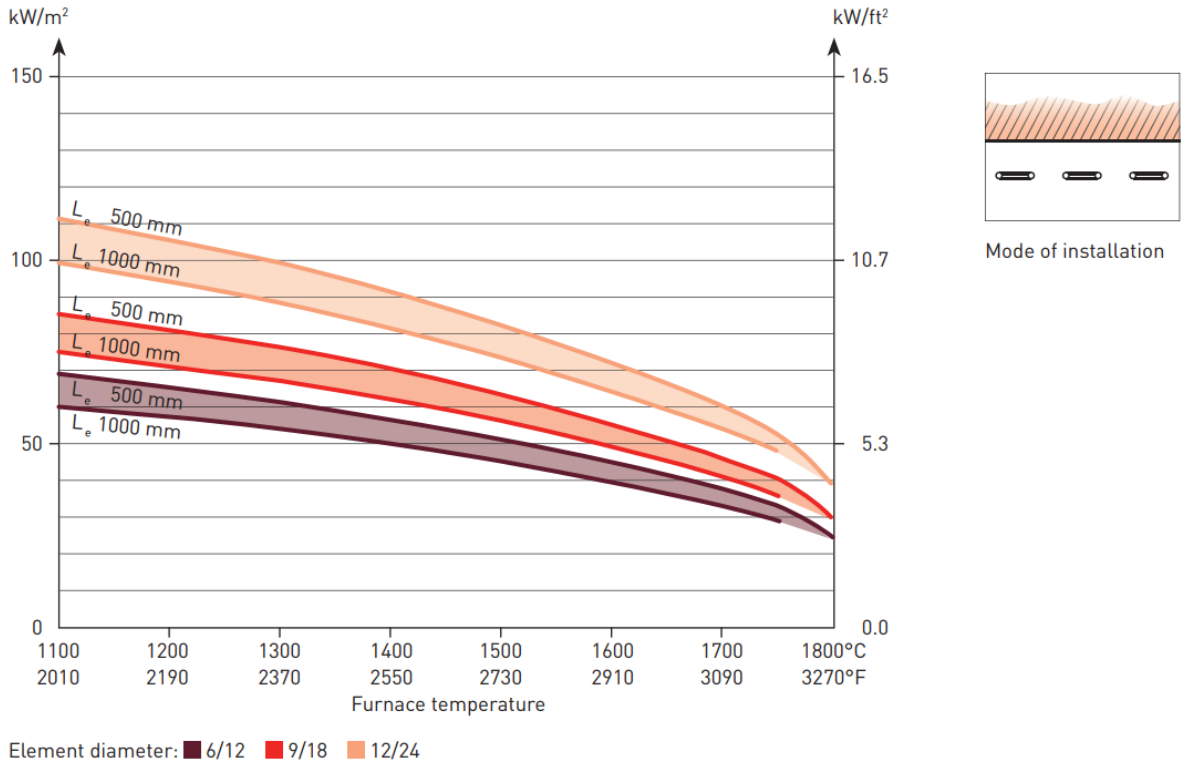

FIGURE 14. Maximum recommended wall loading. (Kanthal, 2022)

6.2.5 Maximum element temperature

From the diagram in Appendix 3 can be obtained that for a Kanthal Super 1800 element at a furnace chamber temperature of 1650 °C and a surface load of 12,57 W/cm^2, the maximum element temperature T_e is approximately 1744 °C.

6.2.6 Resistance at maximum element temperature

In chapter 4.1.3 it was stated that with rising temperature the resistance of the heating elements increases steeply. The resistance of the element at temperature T_e = 1744 °C can be taken from Appendix 3 and has the value of 0,241 Ω. The resistance results from the sum of the length-dependent individual resistances [Ω/m] multiplied by the corresponding lengths, as stated in the following equations (16) and (17).

$$r_e = \frac{(0{,}00261 * T_e - 0{,}255)}{d^2} \text{ for } T_e > 900\,°\text{C} \tag{16}$$

$$r_u = \frac{(0{,}00183 * T_f - 0{,}255)}{D^2} \tag{17}$$

where,

r_e = length dependent resistance of heating zone [Ω/m]

r_u = length dependent resistance of terminal [Ω/m]

d = diameter of the element at the heating zone [m]

D = diameter of the element at the terminal [m]

The total resistance R_t is calculated according to equation (18).

$$R_t = (r_e * L_H) + (r_u * L_T) \tag{18}$$

where,

L_H = length of the heating zone [m]

L_T = length of the terminal [m]

6.2.7 Element voltage and current

The voltage for one heating element can be calculated based on the formula for electric power:

$$P = U * I = \frac{U^2}{R} \tag{19}$$

By rearranging this formula, the equation for the element voltage is:

$$U_e = \sqrt{P_e * R_t} = \sqrt{4573\text{ W} * 0{,}241\ \Omega} = 33{,}2\text{ V} \tag{20}$$

The current is based on Ohms law (U = R*I) whereas the current is:

$$I_e = \frac{U}{R} = \frac{33{,}2\text{ V}}{0{,}241\ \Omega} = 138\text{ A} \tag{21}$$

6.3 Electrical connection

The Kanthal Super heating element will be electrically connected to a three-phase network. The elements can be connected either in series or parallel. For the parallel connection applies:

$$\text{parallel connection} \Rightarrow I_{total} = I_1 + I_2 + I_3 + \ldots + I_n \tag{22}$$

Which would mean that the total current is the sum of currents for each element. Whereas the in the series connection the current remains the same:

$$\text{series connection} \Rightarrow I_{total} = I_1 = I_2 = I_3 = \ldots = I_n \tag{23}$$

Therefore, the heating elements in each group are connected in series in order to keep the cross section of the suppling cable as small as possible.

To have a balanced load at the three-phase network the ideal connection would be in three groups, each having 8 elements. Unfortunately, this was not possible due to the existing outline of the kin. Therefore, the heating elements are dive into three groups with following constellation. In group 1 are seven heating elements in the front-door of the kiln. In group 2 are as well seven elements located at the rear of the Kiln. In the third group are 5 Kanthal Super elements at the left side and 5 elements at the right side, which are electrically connected in series to build one group of heating elements, like shown in FIGURE 11.

For the electrical connection to the supply network are different options. It can be connected with three- phase thyristor controller, which control the three different groups in one device or with three separate thyristor controllers, which control each heating element group individually. This was the choice or this project since it seemed more suitable for future experiments on the research kiln. These three thyristor controller are connected in line with single-phase transformers to get the necessary supply voltage for the heating elements and to reduce harmonic oscillations. The whole connection is done in a so called three wire open-delta connection, which is in principle a delta connection where each element group is handled as a single-phase connected load. FIGURE 15 shows the connection of the heating elements to the supply network.

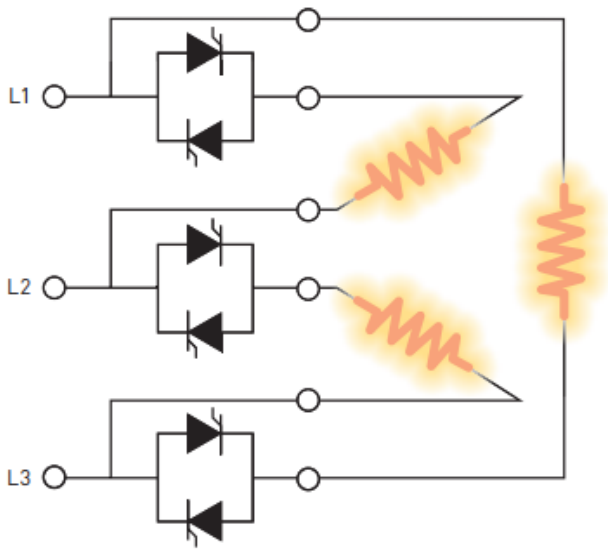

FIGURE 15. Three-wire open delta connection. (Kanthal, 2022)

6.3.1 Thyristor controller

Since the Kanthal Super elements have at room temperature an extremely low resistance it is not possible to connect the heating elements directly to the power supply with a simple on/off control. The resistance of an element at temperature of 20 °C is approximately 11 times lower than its resistance at 1500 °C. As a result, applying full voltage at startup would cause a peak current 11 times greater than the nominal current to flow through the element. This could lead to blown fuses or malfunction of the switching device. (Kanthal, 2022) Therefore, thyristor controllers are used to control the supplied voltage.

A thyristor unit is a semiconductor device which acts as a switch formed by two thyristors in antiparallel. To switch on the alternating current the input signal will be on and the thyristor will switch off at first Zero Crossing voltage with no input signal. The benefits of thyristor units compared with electromechanical contactors are numerous. They have no moving parts, no maintenance and the capacity to switch very fast. Thyristors are the only solution to control transformers and special loads that change resistance with temperature and with age. (CD Automation, 2022) FIGURE 16 shows the basic connection diagram.

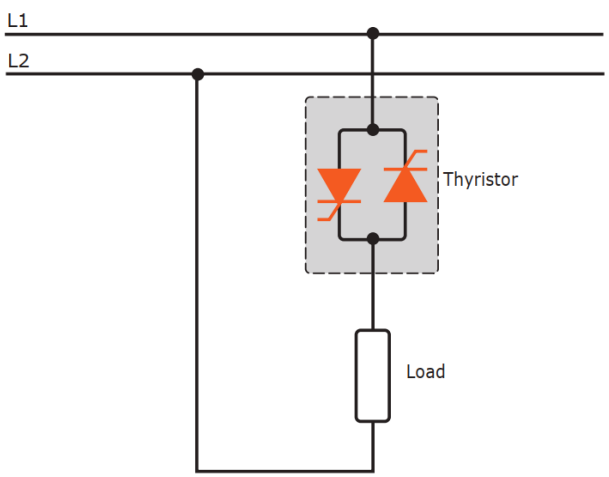

FIGURE 16. Thyristor controlled circuit. (CD Automation, 2022)

6.3.2 Phase-angle firing

The thyristor controller is capable to supply the needed energy to the heating elements by different control modes. Here the phase-angle firing mode, the best suitable for Kanthal Super elements, will be explained.

Phase-angle firing controls power by enabling thyristors to conduct for only a portion of the AC cycle. The thyristor should possess a current ramp turn-on function and a root mean square (RMS) current limit feature. It is important to note that this is not the same as the temperature controller's ramp function. (Kanthal, 2022)

The thyristor begins conducting with a small conduction angle and gradually increases toward maximum conduction over several periods. As more power is required, a larger portion of the sine wave is allowed to pass through the thyristors. If the maximum permitted current is reached before the full wave, the current limit feature prevents any further increase in the conduction angle (see FIGURE 17). The main drawback of phase-angle firing is that it generates radio frequency interference, which may lead to malfunctions in sensitive electronic equipment. To address this issue, transformers are connected between the thyristor controllers and the Kanthal Super heating elements. (Kanthal, 2022)

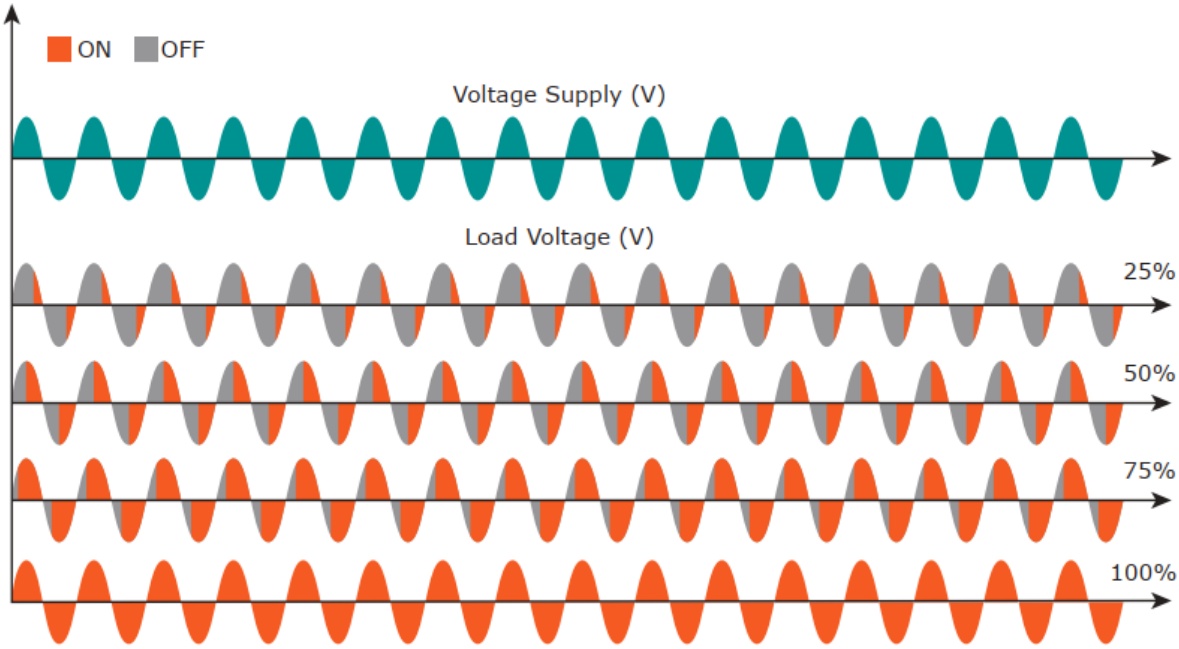

FIGURE 17. Sine wave in phase-angle firing mode. (CD Automation, 2022)

6.3.3 Transformer

The use of transformers was necessary for two reasons, even so it raises the installation cost significantly. First, to minimize the interference towards the supply network, such as harmonic oscillations or the above-described radio frequency interference. The electrical power supply to the building where the research kiln is situated, comes from the public grid. In an industrial power supply with

own transformer substation the use of transformer could be waived, because here the interferences towards the supply network will be discharged at the substation.

The other reason was to get the needed supply voltage to the heating elements. In chapter 6.3 was stated that there a two groups of heating elements with each having 7 elements in series, thus the needed voltage is 232,4 V (33,2 V x 7 elements). One element has a voltage of 33,2 V. In the third group are 10 elements in series, which means the needed voltage is 332 V (33,2 V x 10 elements). FIGURE 18 shows the transformers installed on top of the distribution cabinet for the research kiln. This was the most suitable place to save space and to reduce the danger of electrical hazard.

FIGURE 18. Transformer for heating element supply.

Transformers 1 and 2 are for the heating elements in group one and two. They have a primary voltage of 400 VAC and a secondary voltage of 232,4 VAC with a power of 32,1 kVA and a rated current of 138 A. Transformer 3 (right side in the picture) for heating element group 3 has a primary voltage of 400 VAC, a secondary voltage of 332,4 VAC with 45,9 kVA power and the rated current is as well 138 A.

7 FIRING PROCESS

In this chapter the basic procedure of the firing process for a hybrid kiln will be described. Different firing methods are tested and necessary requirements are discussed. To see the actual function of the kiln and get meaningful results, different measurements were taken in two different firing scenarios. One, where the kiln is fired only with natural gas and another one in hybrid mode. For both test runs the same recipe was used, which was taken from a similar kiln. This kiln is used for production at customer site. The values regarding time and heat input are the same for both test runs.

To simulate a realistic firing cycle the kiln was loaded with refractory bricks on the supporting kiln furniture (see FIGURE 19). The Kiln furniture is the need to support the charge and hold it to its place. The material used is sintered silicon carbide (SSiC). The amount of needed energy to heat up the kin is influenced significantly be the charge, its weight and the kiln furniture.

FIGURE 19. Refractory bricks loaded on supporting furniture inside the research kin.

7.1 Testing of Kanthal Super elements

After the installation of the Kanthal Super elements was completed and the correct mechanical and electrical installation was verified, the function of the heating elements, thyristor controllers and transformers were tested. At first only one group of heating elements was tested. The thyristor controller was switched on with a small conduction angle and then gradually increased. In testing phase, the increase of conduction angle was done manually. Later the control is fully automated,

based on the required recipe. As the function of this group was confirmed the other two groups of heating elements were tested, each separately, in the same way. After successful function test of the heating elements several performance tests were carried out, such as the function of the heating elements in different control modes by the thyristor controller as well as the performance of the transformer.

7.2 Firing cycle

The complete performance of the hybrid kiln was done by run a full firing cycle according to a given recipe. The recipe is basically an instruction for the PLC to control and regulate the necessary instruments in order to have the right amount of gas and combustion air or electric heat at the right time. A firing cycle can be divided into three phases: the heat up time, the soak time, where sintering takes place, and cooling phase, which is important to avoid cracks inside the material. FIGURE 20 shows an example of a firing cycle with the physico-chemical reactions that take place.

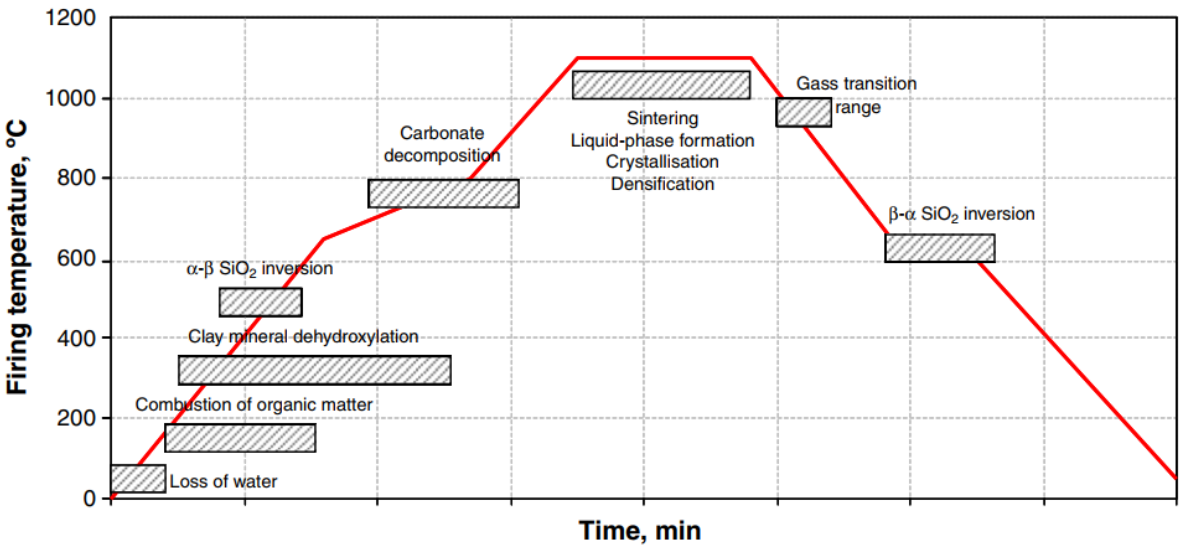

FIGURE 20. Firing curve with the physico-chemical reactions that develop in traditional ceramic compositions. (Ferrer, Mezquita, Gomez-Tena, Machi, & Monfort, 2015)

In the first firing stage the kiln is gradually heated up with the natural gas burner until it reaches a temperature of 300 °C to remove moisture and organic matter. Green ceramics contains binders, which fume off during the firing, developing residual products. To minimize contamination of the furnace atmosphere and walls, it is essential to remove these residual products. At elevated heating element temperatures, these residues might adversely affect the elements. (Bickley, 1994) By individually adapting the heating rate to the product, endothermic and exothermic reactions must be compensated in order to avoid cracking and damage to the still fragile intermediate product.

The temperature profile in FIGURE 21 is showing that the temperature of 300 °C was kept for three hours. This is due to the fact that at this time the incoming amount of air was increased to reduce the concentration of volatile organic chemicals in the kiln atmosphere, in order to avoid the danger

of having an explosive atmosphere inside the kiln. After approximately three hours the temperature was raised until it has reached the maximum temperature for this firing cycle of 1400 °C. The electrical heating elements were switched on at a temperature of 1150 °C, which is reached after 6,5 hours and the natural gas burner will be turned off.

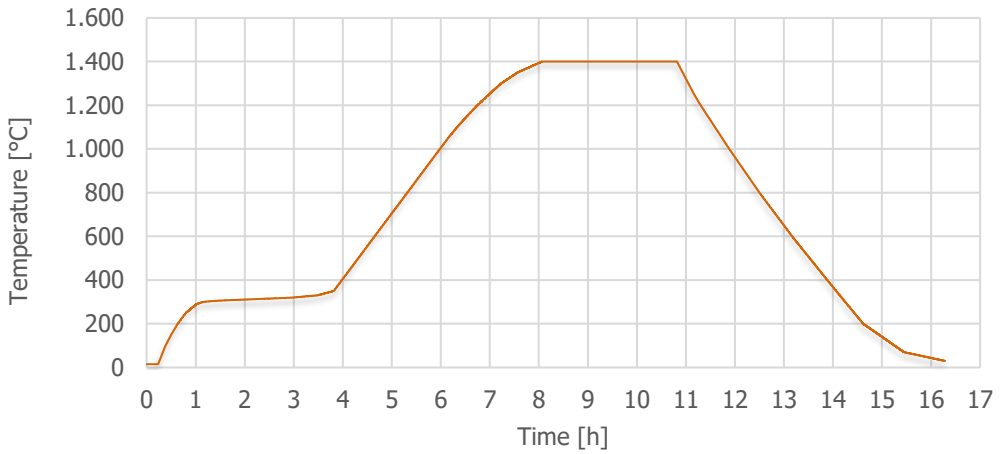

FIGURE 21. Temperature profile during the firing process.

While the heating elements are turned on, a small amount of air, approximately 12 Nm^3/h (nominal cubic meter per hour), must flow through the natural gas burner into the kiln to avoid overheating of the burner The temperature of 1400 °C is kept for about three hours, after which the cooling phase takes place. At this point the heating elements are turned off and the amount of air flowing into the kiln is increased. The whole firing cycle takes about 16 hours.

7.2.1 Nominal cubic meter

The nominal cubic meter is a unit of measurement for the mass of fluids that is commonly used in pneumatics, process engineering and gas technology. It is used to compare gas masses that are present at different pressures and temperatures. For this purpose, the gas masses are each converted to the same normal state. A nominal cubic meter is the amount of gas contained in a volume of one cubic meter at a temperature of 0 degrees Celsius and a pressure of 1,01325 bar.

8 DATA ANALYZIS

As already described in chapter 7, two similar test firings were carried out. All shown data, calculations and assumptions are based on these two firing cycles. During the firing cycle several measurements were obtained and logged by the control PC of the kiln. This is standard procedure for every firing process. From this logging data the measurements of interest are extracted, such as temperature, SVE, Gas flow rate, NOx. TABLE 3 show the measured outputs for energy consumption, CO_2, Nox and prices. The measurements have shown that with electrical heating less energy is consumed, as well that CO_2 and NOx emission is lower than with conventional gas burner heating. Whether the operation in hybrid mode is more economical than conventional gas burner heating depends on the maximum furnace temperature, the holding time and the ratio of gas and electricity prices.

TABLE 3. Measured values for the different firing modes.

firing mode	natural gas [Nm3]	natural gas [kWh]	heating elements [kWh]	energy total [kWh]	CO2 [kg]	NOX [g]	energy cost [EUR]
natural gas	68,27	682,74		682,74	137,23	832,65	75,10
hybrid	21,74	217,37	157,24	374,61	101,24	180,60	73,44

8.1 Energy consumption

The first data to compare was the energy consumption. For the natural gas the amount of used energy cannot be obtained directly from the log file, only the flow rate of the natural gas in standard cubic feet per hour (scfh). The standard unit in Europe is nominal cubic meter per hour (Nm^3/h). Therefore, the obtained values of the flow rate in scfh are converted in to Nm^3/h. The conversion factor is 0,0283168. In order to have the consumption in kilowatt per hour (kWh) the values of Nm^3/h are just multiplied by the factor 10. FIGURE 22 shown a comparison of the power consumption between the two firing modes. Energy consumption increases with furnace temperature and heating rate, during burner operation. The oxygen concentration inside the furnace place also role. The differences of energy consumption between electric heating and gas burner heating are mainly at high temperatures.

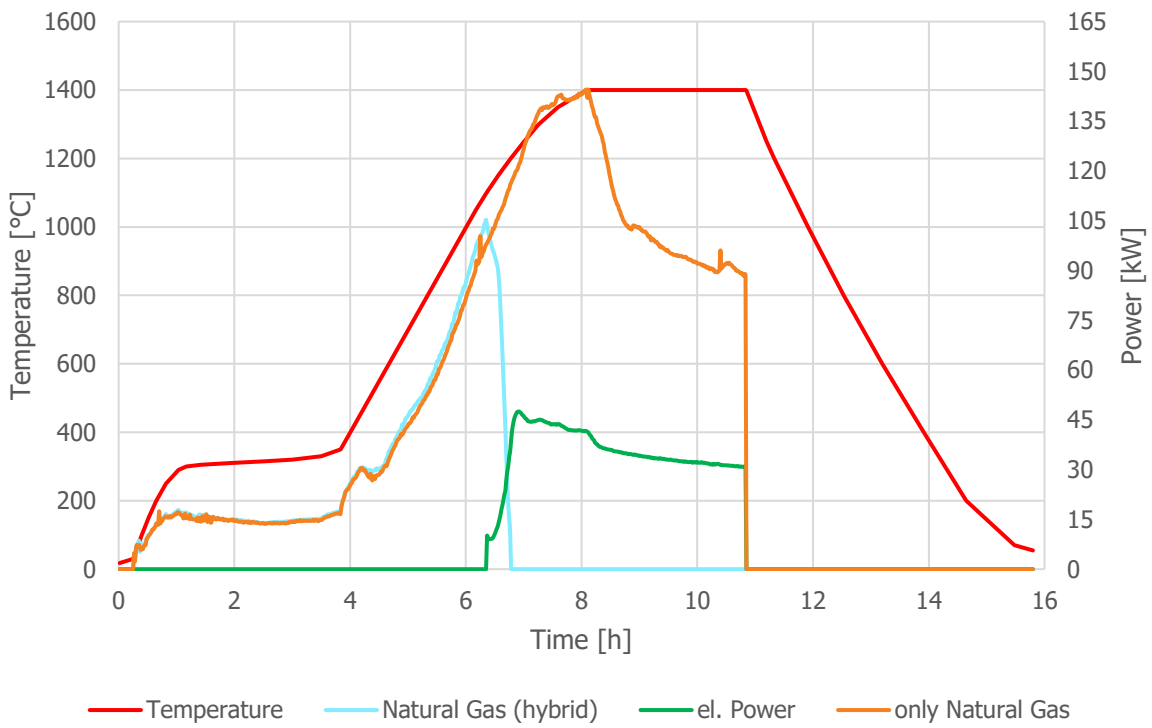

FIGURE 22. Power consumption of gas firing and hybrid firing mode.

The power consumption in natural gas firing only mode is 682,74 kWh, which is 45 % higher than in hybrid mode (see TABLE 4).

TABLE 4. Energy consumption.

firing mode	energy consumption
natural gas only	682,74 kWh
hybrid natural gas	217,37 kWh
hybrid electrical energy	157,24 kWh
hybrid total	374,61 kWh

8.2 Emission

The reduction of emissions is the driving factor for improving firing technologies in the kiln industry. With the hybrid firing mode a reduction of carbon dioxide emissions as well as NOx can be achieved.

The values for CO_2 could not be directly obtained from the measurements. The CO_2 output was calculated based on the energy consumption, shown in TABLE 4, and CO_2 equivalents. These are published by federal office for economy. From there can be obtained the CO_2 factors of energy sources. Appendix 4 shows an excerpt from the paper. Based on this Paper the CO_2 factor for natural gas is 0,201 tCO_2/MWh and the CO_2 factor for electrical energy =0,366 tCO_2/MWh. (Bundesamt für

Wirtschaft, 2022) In FIGURE 23 are compared the outputs of CO_2 between the firing mode with natural gas only and the hybrid mode. The numbers are presented in TABLE 3.

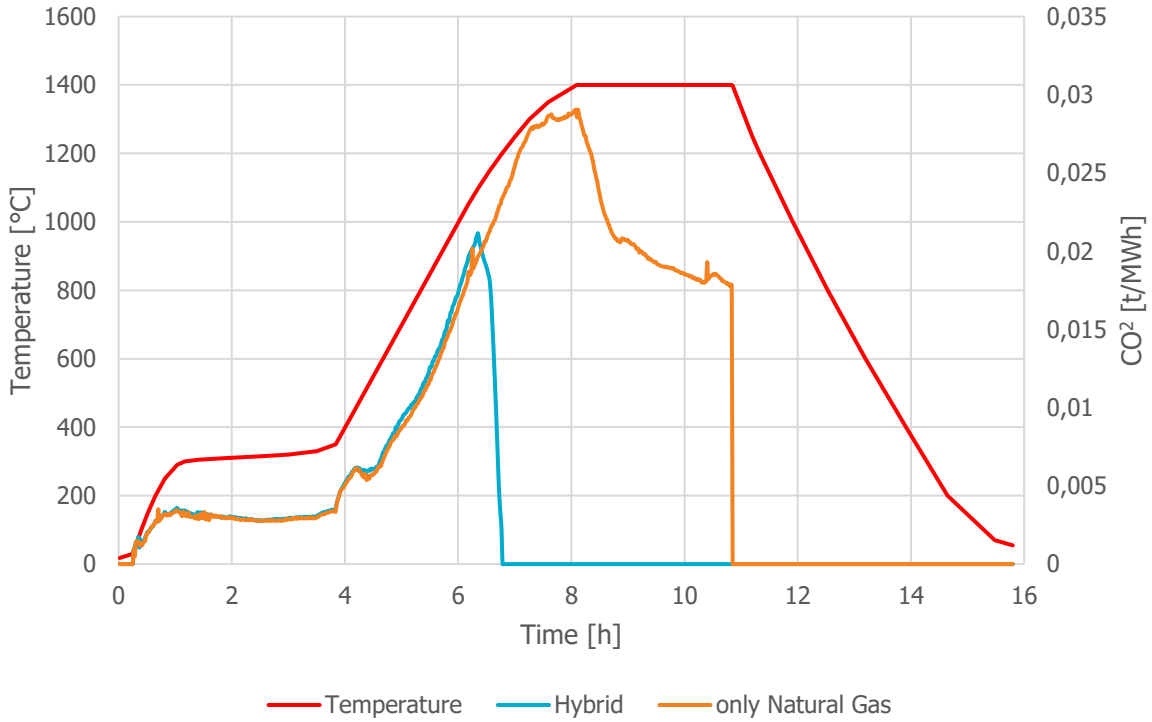

FIGURE 23. CO_2 output of different firing modes.

Due to the electrical heating mode in the upper temperature range, the emissions can be significant be reduced. The emitted CO_2 is according to the CO_2 equivalents used proportional to the total consumption. If the consumption of the fans is added, the difference to burner operation becomes even higher, since in electrical heating mode the exhaust fan must be operated only to discharge the pilot air, which is needed for cooling the burner.

The difference in NOx emissions is especially high. While the concentration within the exhaust gas for temperatures above 1300 °C for electrical heating mode and natural gas burner heating is approximately the same, in natural gas burner operation only, more NOx emitted into the environment, due to the increased flow rate of air and natural gas. The values for NOx emissions can be obtained from TABLE 3. The graphs in FIGURE 24 show a comparison of the NOx output. In the hybrid mode the NOx concentration approaches zero ones the burners are shut down. This can be explained by the high flame temperature of the burner, which leads to NOx formation even at low furnace temperatures. While the electrical heating elements are alone in operation the sensors can detect NOx concentrations just approximately above 1240 °C.

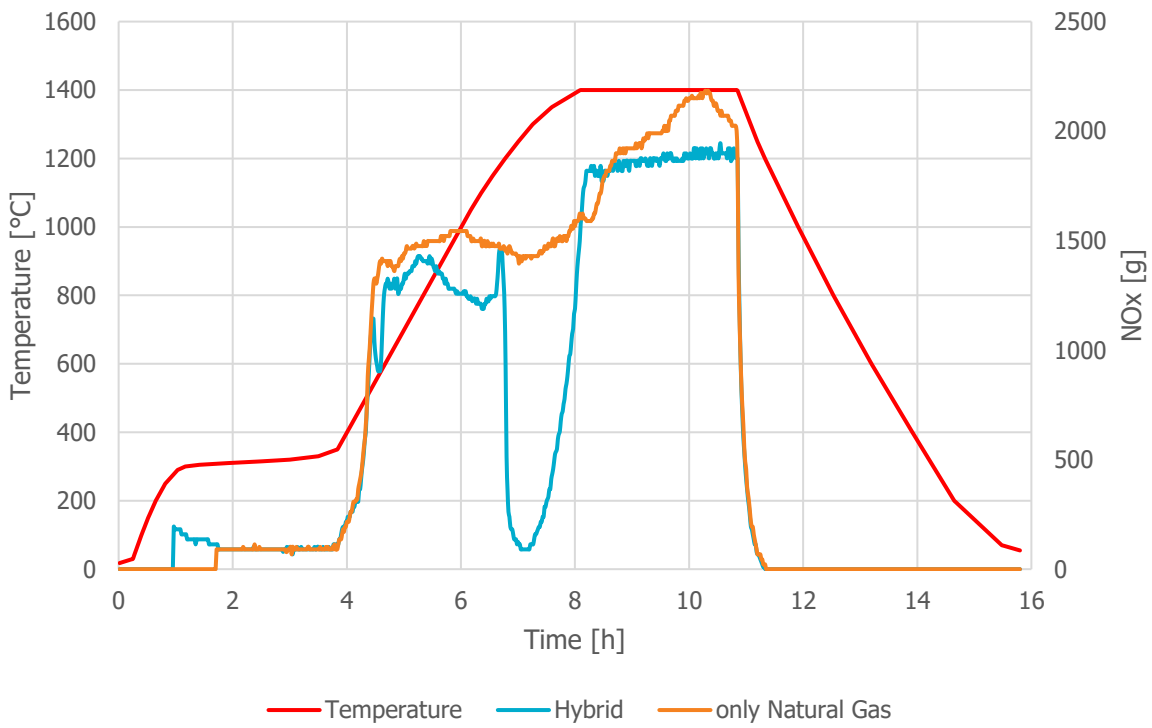

FIGURE 24. NOx output of different firing modes.

8.3 Firing costs

To calculate the actual cost of one firing cycle the prices for natural gas and the prices for electrical energy must be included into the equation about the consumption. According to the public news broadcaster, NDR (Norddeutscher Rundfunk), was in March 2023 the average price for natural gas in Germany 11 cent/kWh. (NDR, 2023). The price for electrical energy is according to the same broadcaster was 31,5 cent/kWh (NDR, 2023). In TABLE 5 is a comparison of the prices incurred for the two different firing modes during one firing cycle. Herby is only the energy consumption of the heating elements taken into the calculation. Row 1 in TABLE 5 shows the figures for the prices in March 2023, as stated above. Despite the fact, that the price for natural is much lower compared to electrical energy the firing in hybrid mode would already lead to cost savings. The second and third row display how the prices would drop if the electrical energy prices were different. For example, if the electrical energy could be produced by solar panels, assuming the production price would be around 6 cent/kWh, the energy prices could be reduced by more than 50 %.

TABLE 5. Prices for energy consumption during one firing cycle.

natural gas only	natural gas in hybrid mode	heating elements	hybrid total	electrical energy price
682,74 kWh	217,37 kWh	157,24 kWh	374,61 kWh	
75,10 €	23,91 €	49,53 €	73,44 €	31,5 cent/kWh
		39,31 €	63,22 €	25cent/kWh
		9,43 €	33,35 €	6 cent/kWh

FIGURE 25 shows the transient energy costs for both firing modes during the firing cycle.

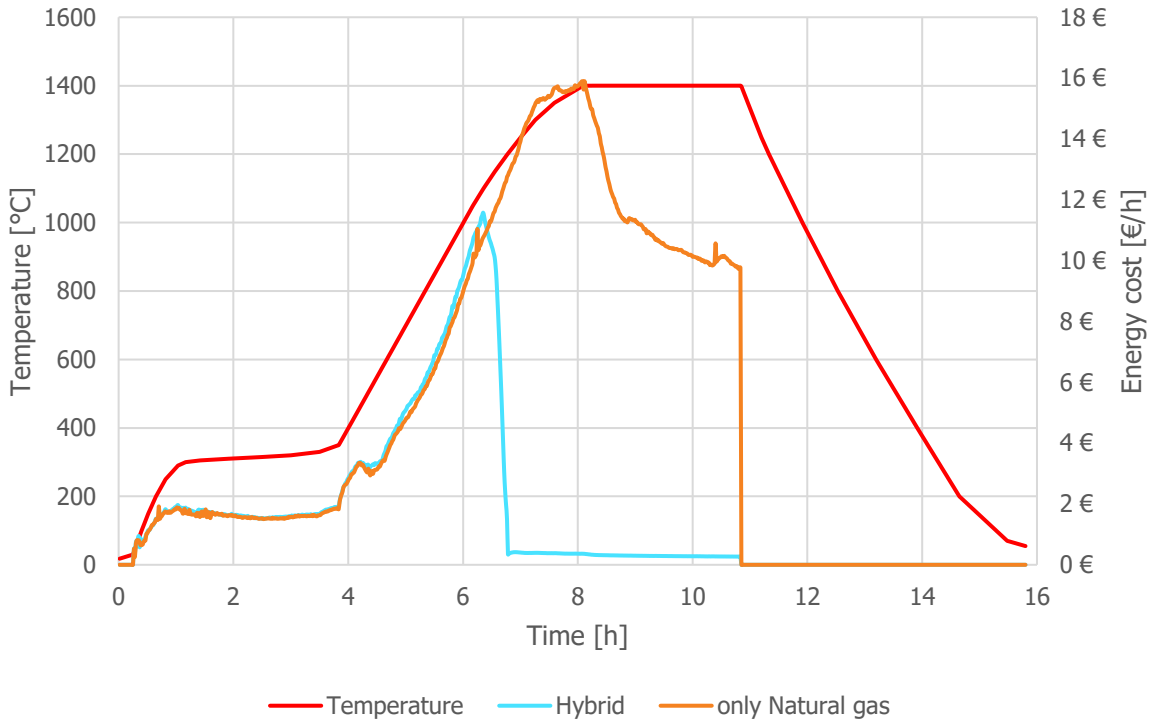

FIGURE 25. Energy cost during firing cycle.

8.4 Installation cost for heating elements

For a potential customer are the installation costs for the heating elements an important factor. The following list gives the material costs, without value added tax, for the installation:

- Kanthal super heating elements, 24 pcs (including contact straps and shank holder) 24.777 EUR
- touch protection 607 EUR
- insulating tubes, 50 pcs 1.053 EUR
- thermocouple, 4 pcs 1.710 EUR
- thyristor controller, 3 pcs 3.096 EUR
- transformer, 3 pcs 11.425 EUR
- distribution cabinet 831 EUR
- cable 1.265 EUR
- additional installation material 2.000 EUR

The material for the whole installation of the electrical heating elements sums up to a total amount of 46.764 EUR. The working hours of roughly 200 hours would add additional 10.000 EUR to the installation costs.

8.5 Amortization of the investment

The actual pay-off time for the installation and saved energy during the firing cycles is depending on which influencing factors are taken into the equation. From TABLE 5 can be seen that under the current condition the savings in energy prices unsignificant.

A firing cycle takes 16 hours. Loading and unloading can be assumed with 3 hours together. If the kiln is running continuously over the year, there could by including down dime for maintenance 350 firing cycles. In TABLE 6 are presented three different scenarios for a possible amortization time. Included into the calculation is the current carbon price (March 2023) of 90 EUR according to the information platform Carbon Credits.com. (Carbon Credits.com, 2023). The different scenarios are according to costs for electrical energy.

TABLE 6. Amortization time of investment.

saved firing cycle	saved per year	amortization time	electrical energy price
4,90 €	1.714,88 €	33,1 years	31,5 cent/kWh
15,12 €	5.292,03 €	10,7 years	25,0 cent/kWh
45,00 €	15.748,33 €	3,6 years	6,0 cent/kWh

9 DISCUSSION

The aim of this thesis was to study the performance of a hybrid kiln consisting of natural gas fired burner and electric heating elements made of molybdenum disilicide. The heating elements were installed on an existing gas fired chamber kiln. The measurements have shown that the use of electrical heating elements at high kiln temperatures reduce energy consumption, as well as the CO_2 and NOx emissions. The economic efficiency depends mainly on the maximum furnace temperature, the length of the holding time and the desired O_2 concentration during the conventional firing mode with natural gas only. The higher these process values are, the more energy and costs can be saved. Besides the high investment costs, the savings in money during the operation in hybrid mode turned out not be as much as expected. But seen from the environmental point of view, the savings are considerable high, especially the output of NOx. The negative impact on human health is considerable high, as Nitrogen dioxide (NO_2) directly damages the mucosal tissue in the entire respiratory tract. The diversity of ecosystems decreases through eutrophication and acidification and in waters the growth of algae is accelerated.

Since in this project the installation of the electrical heating elements was done on an existing natural gas fired kiln, further saving possibilities are limited. Nevertheless, the research will continue to improve the performance of the hybrid kiln. For completely new installations, additional savings could be achieved by implementing smaller sized burner for less overall natural gas output, because in hybrid mode the peaks in energy demand are covered by the electrical heating elements.

Would the minimum flow rate of combustion air and pilot air omitted, savings could be exploited to an even greater extent, since the provision of the air contributes significant to the consumption of electrical energy, especially at high temperatures.

REFERENCES

BDH. (2020, 02). *NOx-Emission bei Feuerungsanlagen.* (F. a. industry, Ed.) Retrieved 02 13, 2023, from https://www.bdh-industrie.de/fileadmin/user_upload/Publikationen/Infoblaetter/Infoblatt_Nr_66_NOx-Emission_Feuerungsanlagen_022020.pdf

Bickley, R. G. (1994). *Firing ceramics.* Singapore: World Scientific Publishing CO. Ptc. Ltd.

Bundesamt für Wirtschaft. (2022, 11 30). *Informationsblatt CO2-Faktoren.* (B. f. Ausfuhrkontrolle, Ed.) Retrieved 03 29, 2023, from https://www.bafa.de/SharedDocs/Downloads/DE/Energie/eew_infoblatt_co2_faktoren_2022.pdf?__blob=publicationFile&v=6

Bureau of Energy Efficiency. (2023). Question bank for Energy Managers & Energy Auditors. Retrieved 01 13, 2023, from https://beeindia.gov.in/sites/default/files/1.4_material_and_energy_balance.pdf

Carbon Credits.com. (2023, 03 29). *Live Carbon Prices Today*. Retrieved 03 29, 2023, from https://carboncredits.com/carbon-prices-today/

CD Automation. (2022, 05). *REVO C User's manual.* Retrieved 01 26, 2023, from https://www.cdautomation.com/wp-content/uploads/Eng-REVO-C-1PH-60-210-Thyristor-Units.pdf

Chemie-Schule. (2023). *Feuerung*. Retrieved 01 13, 2023, from https://www.chemie-schule.de/KnowHow/Feuerung

CTB. (2022, 08 26). Kiln layout drawing. Berlin. Retrieved 01 10, 2023

CTB. (2023, 02 05). *Engineering*. Retrieved 02 05, 2023, from http://www.ctb-berlin.de/en/consultation-and-planning_en.htm

Energy Education. (2023). *Heat transfer mechanisms*. (U. o. Galgary, Editor) Retrieved 01 12, 2023, from https://energyeducation.ca/encyclopedia/Heat_transfer_mechanisms

Energy Education. (2023). *Thermal conduction*. (U. o. Galgary, Editor) Retrieved 01 12, 2023, from https://energyeducation.ca/encyclopedia/Thermal_conduction

Ferrer, S., Mezquita, A., Gomez-Tena, M., Machi, C., & Monfort, E. (2015, 03 06). *Estimation of the heat of reaction in traditional ceramic compositions.* (A. d. Instituto de Tecnología Cerámica, Ed.) Retrieved 02 07, 2023, from https://www.sciencedirect.com/science/article/abs/pii/S0169131715000708

Görner, K. (1992). *Charakterisierung, Modellbildung und Simulation technischer Verbrennungssysteme.* Stuttgart: University of Stuttgart.

Heirloom. (2023, 01 9). *Electric kilns: How an old technology is key to our climate future*. Retrieved 03 30, 2023, from https://medium.com/@heirloomcarbon/electric-kilns-how-an-old-technology-is-key-to-our-climate-future-1690bd9e5cfc

IPCC. (2023, 03 30). *Mitigation of Climate Change.* Retrieved 03 30, 2023, from https://archive.ipcc.ch/publications_and_data/ar4/wg3/en/ch7s7-4-5-4.html#:~:text=The%20main%20fuels%20used%20in,natural%20gas%20and%20fuel%20oil.

Kanthal. (2022, 06). *Kanthal Super Electric heating elements Handbook.* Retrieved 01 10, 2023, from https://www.kanthal.cn/globalassets/kanthal-global/downloads/super-handbook_b_eng.pdf

KANTHAL AB. (1999). *KANTHAL SUPER Electric Heating Element Handbook.* Retrieved 01 10, 2023, from https://pdf.directindustry.com/pdf/kanthal/heating-elements/33240-182269.html

Mickey, S. R. (2019, 02 15). *High-efficiency gas burners make good economic sense*. (Thermal Processing) Retrieved 02 16, 2023, from Thermal Processing: https://thermalprocessing.com/high-efficiency-gas-burners-make-good-economic-sense/

NDR. (2023, 03 27). *Gaspreis aktuell*. Retrieved 03 27, 2023, from https://www.ndr.de/fernsehen/sendungen/markt/Gaspreis-aktuell-wie-viel-kostet-Kilowattstunde,gaspreis142.html#:~:text=Laut%20Daten%20von%20Verivox%20kostet,Datenstand%3A%2027.03.2023).

NDR. (2023, 03 27). *Strompreis aktuell*. Retrieved 03 27, 2023, from https://www.ndr.de/nachrichten/info/Strompreis-aktuell-So-viel-kosten-die-Kilowattstunden,strompreis182.html

SimScale Documentation. (2023, 03 30). *What Is Heat Transfer?* Retrieved 03 30, 2023, from https://www.simscale.com/docs/simwiki/heat-transfer-thermal-analysis/what-is-heat-transfer/

TU Ilmenau. (2023). *Theoretische Grundlagen.* Retrieved 01 23, 2023, from http://thedy22.maschinenbau.tu-ilmenau.de/wwwtd/m2twin/images/grund.pdf

Türk+Hillinger. (2018, 02). Berechnungsgrunglagen für elektrische Heizelemente. Tuttlingen, Germany. Retrieved 01 12, 2023, from https://www.tuerk-hillinger.com/wp-content/uploads/2017/09/Berechnungsgrundlagen_D.pdf

APPENDIX 1: KANTHAL SUPER ELEMENT CALCULATION

Kanthal Super - Element calculation program v2.1 release 2007-09

Furnace data		**Case 1**	**Case 2**
Furnace temperature, Tf	°C	1650	1650
Dewpoint, Dp	°C		
Atmosphere		Air	Air
Element data			
Grade		1800	1800
Hot zone diameter, d	mm	6	9
Terminal diameter, D	mm	12	18
Shanks			
Terminal length, Lu	mm	590	660
Hot zone length, Le	mm	850	800
Shank distance (c-c), a	mm	60	60
Intermediate shank length, B	mm		
Calculation output			
Surface load	W/cm²	12,95	9
Max recommended Te	°C	1800	1800
Calculated Te	°C	1744	1717
Electrical output			
Hot resistance / element	Ω	0,241	0,102
Current / element	A	138	213
Voltage / element	V	33,2	21,6
Power / element	W	4573	4602
Number of elements in series	pcs	8	8
Hot resistance for elements in series	Ω	1,928	0,814
Element connection		Y	Y
Total number of elements per group	pcs	8	8
Voltage for elements in series	V	265,6	173,1
Min.sec. voltage of ev. transformer	V	460	300
Power per group	kW	36,6	36,8
Number of groups		3	3
Total power	kW	109,8	110,4

Date	03.08.2022	Customer	
Sign	Kovacs		

APPENDIX 2: FURNACE POWER (KANTHAL AB, 1999)

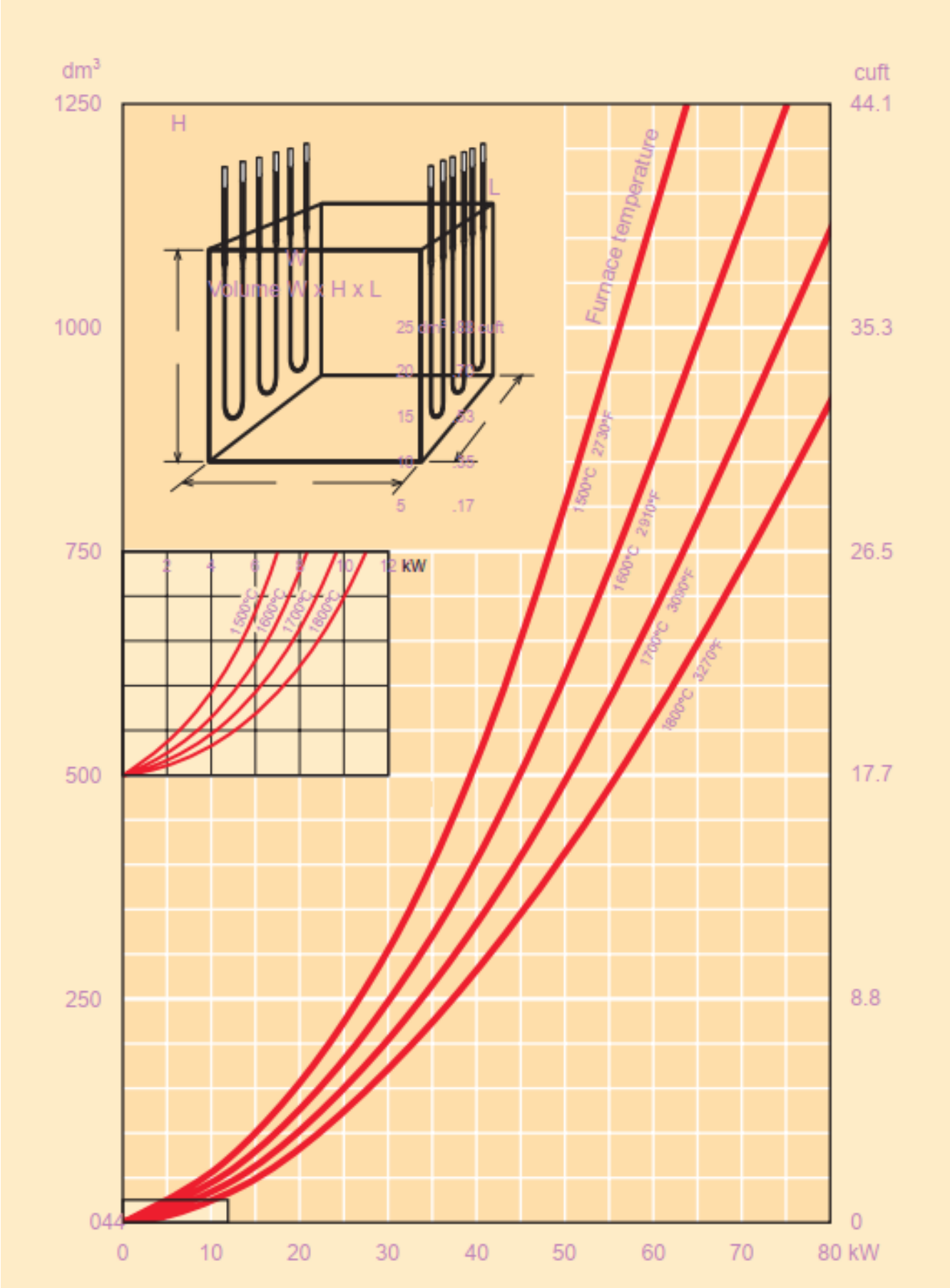

The approximate power at a given chamber volume for a ceramic fiber lined furnace. For a brick lined furnace the power is normally about 25 % higher.

APPENDIX 3: TEMPERATURE – LOADING DIAGRAM FOR KANTHAL SUPER (KANTHAL AB, 1999)

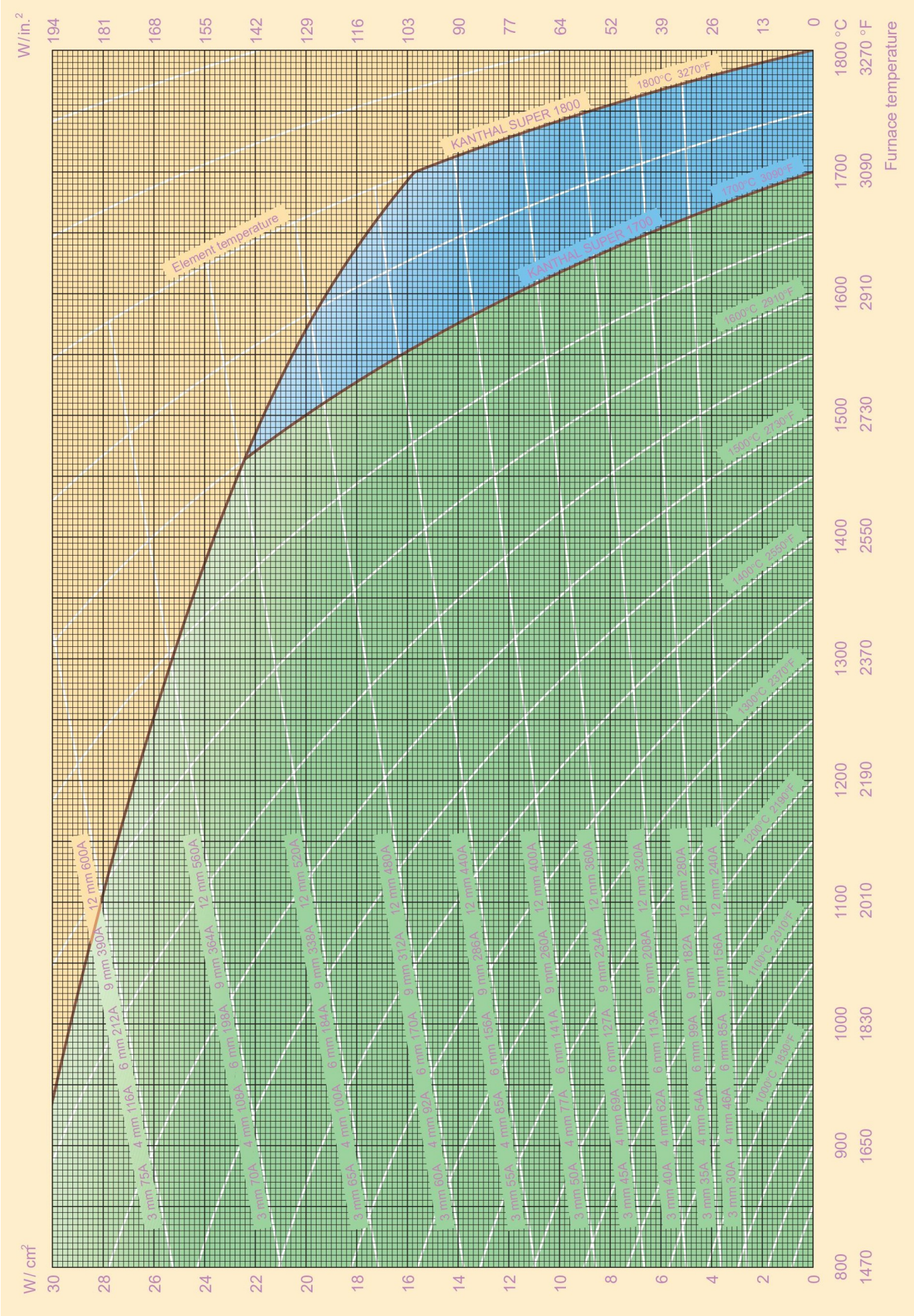

APPENDIX 4: CO_2 FACTORS OF ENERGY SOURCES (Bundesamt für Wirtschaft, 2022)

Tabelle 2: CO2-Faktoren der Energieträger

Energieträger	Einheit	CO_2-Faktor
Altöl	tCO_2/MWh	0,288
Biodiesel[4]	tCO_2/MWh	0,070
Bioethanol[4]	tCO_2/MWh	0,043
Biogas[4]	tCO_2/MWh	0,152
Biomasse Holz[5]	tCO_2/MWh	0,027
Braunkohle	tCO_2/MWh	0,383
Deponiegas	tCO_2/MWh	0,05
Erdgas	tCO_2/MWh	0,201
Flüssiggas	tCO_2/MWh	0,239
Heizöl leicht / Diesel	tCO_2/MWh	0,266
Heizöl schwer	tCO_2/MWh	0,288
Klärgas	tCO_2/MWh	0,05
Klärschlamm	tCO_2/MWh	0,010
Nah- / Fernwärme	tCO_2/MWh	0,280
Pellets	tCO_2/MWh	0,036
Rohbenzin	tCO_2/MWh	0,264
Steinkohle	tCO_2/MWh	0,335
Strom (Effizienzmaßnahme)[6]	tCO_2/MWh	0,732
Strom (Energieträgerwechsel zu Strom)[7]	tCO_2/MWh	0,366
Strom (Erneuerbare Quelle)[8]	tCO_2/MWh	0
Wasserstoff	tCO_2/MWh	0,385

Berechnung von eigenem CO_2-Faktoren für Energieträger

Sollten verwendete Energieträger nicht aufgeführt sein, kann im Einsparkonzept „Sonstiges" ausgewählt und ein eigener Faktor eingetragen werden.

Real können die Emissionen im Nah- bzw. Fernwärmebereich in Abhängigkeit des Erzeugerparks deutlich nach oben und nach unten abweichen. Bei der Eingabe im Einsparkonzept besteht daher die Möglichkeit, einen abweichenden Wert einzutragen.

In jedem Fall ist ein Nachweis über die Methode der Berechnung des CO_2-Faktors zu erbringen. Die Berechnungsmethode muss nachvollziehbar dargestellt werden oder einem allgemein anerkannten standardisierten Verfahren entsprechen. Es besteht kein Anspruch auf die Anerkennung der eigenen Berechnungsmethode.

[4] Nur bei Erzeugung auf dem Betriebsgelände

[5] Anforderungen an Biomasseanlagen und Biomasse aus Merkblatt Modul 2 beachten

[6] CO_2-Faktor für die Bilanzierung von Einsparungen an elektrischer Energie

[7] CO_2-Faktor für die Bilanzierung von Mehrverbräuchen an elektrischer Energie beim Wechsel zu elektrischer Energie

[8] Abschnitt „Definition von Strom (erneuerbare Quelle)" beachten