VAASAN AMMATTIKORKEAKOULU
UNIVERSITY OF APPLIED SCIENCES

Jesse Nissilä

MANUFACTURING LARGE TITANIUM PARTS

Baltic Yachts

School of Technology
2023

VAASAN AMMATTIKORKEAKOULU
Konetekniikka

TIIVISTELMÄ

Tekijä	Jesse Nissilä
Opinnäytetyön nimi	Suurten titaaniosien valmistus
Vuosi	2023
Kieli	Englanti
Sivumäärä	53
Ohjaaja	Juha Hantula

Opinnäytetyön aiheena on tutkia vaihtoehtoisia valmistusmenetelmiä erään huvijahdin kantosiivekkeen saranalle. Nykyisin, sarana valmistetaan titaanista jyrsimällä. Valmistus on hidasta, kallista, sekä valmistuksesta aiheutuu suuria määriä materiaalihukkaa. Opinnäytetyön tilaajana toimi jahtivalmistaja Baltic Yachts.

Opinnäytetyössä perehdyttiin valmistustekniikoihin eri lähteiden, sekä kirjallisuuden avulla. Teorian pohjalta eri menetelmien hyvät, sekä huonot puolet kartoitettiin, ja näiden sopivuutta arvioitiin tutkimuskohteen saranalle. Teoriaosuuden lisäksi saranaa yritettiin optimoida Siemens NX-mallinnusohjelmalla, sekä luotiin prototyyppi lisäävän valmistuksen keinoin.

Tutkimuksen pohjalta, kantosiivekkeen sarana olisi mahdollista valmistaa lisäävän valmistuksen suorakerrostusmenetelmien avulla. Osan optimointi, sekä suorakerrostusmenetelmät vaativat kuitenkin lisää tutkimusta tulevaisuudessa.

Avainsanat valmistustekniikka, lisäävä valmistus, titaani, veneteollisuus

VAASAN AMMATTIKORKEAKOULU
UNIVERSITY OF APPLIED SCIENCES
Konetekniikka

ABSTRACT

Author	Jesse Nissilä
Title	Manufacturing Large Titanium Parts
Year	2023
Language	English
Pages	53
Name of Supervisor	Juha Hantula

The aim of this thesis was to research alternative manufacturing methods for a hinge piece for a yacht. This hinge connects a hydrofoil wing into the hull of the yacht. Currently, the hinge is manufactured by milling from titanium. Manufacturing is slow, expensive and produces lots of material waste. This thesis was done for Baltic Yachts, a luxury yacht manufacturer.

In the thesis, various manufacturing techniques were researched through different sources and literature. Based on the theory, the advantages and disadvantages of different methods were identified, and their suitability was evaluated for the hinge of the research subject. In addition to the theoretical part, the hinge was attempted to be optimized with Siemens NX modeling software, and a prototype was created using additive manufacturing methods.

Based on the research, it would be possible to manufacture the hinge using additive manufacturing Direct Energy Deposition methods. However, optimization and further research of DED are required before the hinge is possible to be manufactured.

Keywords Manufacturing, additive manufacturing, titanium, and marine applications

CONTENTS

TIIVISTELMÄ

ABSTRACT

ABBREVATIONS

AKNOWLEDGEMENTS

1 INTRODUCTION 8

1.1 Baltic Yachts 8

1.2 Objective and Research Problem 9

1.3 Outline of the Study 12

2 MANUFACTURING OF TITANIUM PARTS 13

2.1 Manufacturing 13

2.2 Titanium 14

2.3 Titanium Grade 5 (6Al-4V) 16

2.4 Choosing the Main Research Subject 16

3 ADDITIVE MANUFACTURING 20

3.1 Binder Jetting (BJT) 22

3.2 Directed Energy Deposition (DED) 23

3.3 Material Extrusion (MEX) 25

3.4 Material Jetting (MJT) 27

3.5 Powder Bed Fusion (PBF) 28

3.6 Sheet Lamination (SHL) 30

3.7 Vat Photopolymerization (VLL) 32

4 APPLICATION 34

4.1 Applicability 34

4.2 Optimization 41

4.3 Prototyping 45

5 RESULTS 48

6 SUMMARY AND FUTURE 50

REFERENCES 51

LIST OF FIGURES AND TABLES

Figure 1. Company logo 9
Figure 2. Flying Nikka 10
Figure 3. CAD model of the hinge 11
Figure 4. Manufacturing methods 13
Figure 5. Ultimaker 3..... 18
Figure 6. Schematic of BJT 22
Figure 7. Schematic of DED..... 24
Figure 8. Example of DED..... 25
Figure 9. Schematic of MEX 26
Figure 10. Schematic of MJT 28
Figure 11. Schematic of PBF..... 29
Figure 12. Schematic of SHL..... 31
Figure 13. Shematic of VPP 32
Figure 14. X160Pro..... 35
Figure 15. BLT-S800..... 37
Figure 16. BLT printers 38
Figure 17. LASERTEC 125..... 39
Figure 18. Model before FEM analysis..... 42
Figure 19. Maximum displacement 43
Figure 20. Mock-up hinge 44
Figure 21. Example of TO (Reference only) 45
Figure 22. UltiMaker Cura interface 46
Figure 23. Prototype printing in progress..... 47
Figure 24. Finished prototype..... 47

LIST OF ABBREVATIONS

AM	Additive manufacturing
BJT	Binder jetting
CAD	Computer aided design
CNC	Computer numerical control
DED	Directed energy deposition
FEM	Finite element method
MEX	Material extrusion
MJT	Material jetting
PBF	Powder bed fusion
PLA	polylactic acid
SHL	Sheet lamination
TO	Topology Optimization
VLL	Vat photopolymerization

AKNOWLEDGEMENTS

First I would like to thank Baltic Yachts for the very interesting topic and support. I would also like to thank my mentors from VAMK and everyone who was involved during the process of researching the thesis.

Much time and effort were put into this, and lots have been learned about additive manufacturing, methods of research, English writing, and critical analysis of different source materials.

For improvement, the workload could have been split more evenly. Near the end, slight lack of time was experienced. This led up to the analysis and results sections to being not as polished and researched as hoped. The major focus points were in theory and research. Still, satisfactory results were provided. Hopefully, this research will aid Baltic Yachts in the future, when planning to manufacture parts with additive manufacturing.

1 INTRODUCTION

This thesis was done for Baltic Yachts. Baltic Yachts operates in the marine business, producing high-end yachts. In this thesis manufacturing methods for large scale titanium parts was researched. Especially the methods of additive manufacturing (AM) interest the client.

The case study in this thesis is a hinge piece for a hydrofoil wing of a yacht. Currently, the hinge is made from a large titanium billet blank by milling. The manufacturing method is slow, expensive, and milling results in a large amount of material waste. The main objective is to research alternative manufacturing methods for the hinge. The topic of optimization is also visited briefly.

Juha Hantula, a senior lecturer from VAMK is supervising this thesis, and Jani Kahari is Baltic Yachts main contacts' person.

1.1 Baltic Yachts

Baltic Yachts is one of the world leaders in advanced composite yacht building. Baltic Yachts combines unmatched quality, extreme performance, and traditional craftsmanship to build Yachts, guaranteed to provide client the best possible sailing experience. [1]

For 50-years, Baltic Yachts has been building custom yachts to meet their clients wishes. Baltic Yacht builds yachts that are lighter, stiffer, and faster than their competition. To achieve the quality and performance, Baltic Yachts is constantly working as a team alongside business partners who are experts in their field. [2]

---

[1] Baltic Yachts, About us
[2] Baltic Yachts, About us

Baltic yachts are divided into three separate offices. Two of which are in Ostrobothnia, Finland. The company's main facility is in the coast of Pietarsaari. Alongside with Pietarsaari facility, Baltic Yachts has another main building facility in Bosund, about 30 minutes' drive from Pietarsaari. Both locations build and service yachts. In addition to the Finland facilities, Baltic Yachts has a service & refit facility in Mallorca, Spain.[3]

Figure 1. Company logo[4]

1.2 Objective and Research Problem

The aim of this thesis is to research current manufacturing possibilities for large scale titanium parts in a yacht. More traditional methods of manufacturing, such as casting and forging will be researched, but the main research will be done withing additive manufacturing. a notable part of Baltic Yachts production is custom made, which caters for AM. Suitable manufacturing methods are focused, strengths and constraints evaluated. If a suitable manufacturing method comes across, it will be suggested with backed up information.

A yacht, where the case study hinge is mounted to, is called Baltic 111 custom, which is an ultra-lightweight superyacht. This yacht is designed for coastal and offshore sailing. It is made from high-quality materials, fitted with a luxury interior

[3] Baltic Yachts, homepage
[4] Baltic Yachts, homepage

and weights as little as possible. Lightness is considered in every aspect of the yacht from structural to interior design.

The yacht is fitted with a set of hydrofoil support wings. The wings are controlled by hydraulics and can be lifted or lowered separately depending for example, direction of the wind or waves. For safety reasons, the hydrofoil wings are not essential for stability of the yacht like they can be in racing applications. This means that the yacht will not capsize without them. [5]

In Figure 2 below, for reference only, is a racing yacht named “Flying Nikka”, which is equipped with similar concept wings and a separate keel, as the Baltic 111 Custom. While both yachts follow a similar concept, Flying Nikka is a flying yacht, while the Baltic 111 Custom will most likely not, this is due to size difference of the yachts. Flying Nikka is only around half of the length and weighs a fraction of Baltic 111 Custom.

Figure 2. Flying Nikka[6]

[5] Baltic Yachts, conversations with Baltic Yachts
[6] Yachting world, The world’s most radical yacht? Onboard Flying Nikka

The case study in this thesis will be a hinge piece, that connects the hydrofoil wing into the hull of the yacht. Figure 3 below shows a CAD model of the hinge. The hinge is located amidships of the yacht. The dimensions for the hinge piece are ca. 1400 mm x 300 mm x 320 mm, and it weighs around 140 kilograms. It is manufactured from titanium grade 5 (6Al-4V). Currently, the hinge is made by an external company from a blank. The production of the part is expensive, slow and produces lots of material waste.

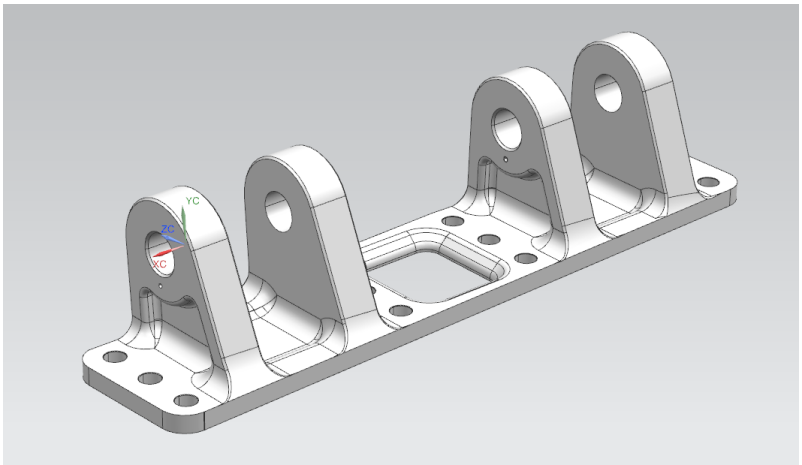

Figure 3. CAD model of the hinge

In addition to researching alternate manufacturing methods, topic of optimization is visited with some speculation and some topology optimization done by Siemens NX. Although, optimization will be only a second priority. The hinge is developed by an expert team; therefore, optimization may be challenging but worth visiting.

Despite the case study of this thesis being the hinge piece, results from this study may be applicable also in other similar titanium products. In the custom yacht business, there are many unique parts that may also benefit from this study.

With the description of the research problem, research question could be summarized into a couple sentences: what manufacturing possibilities there are for titanium parts, and could the hinge be optimized for better performance.

1.3 Outline of the Study

The first section of the report introduces the topic, background, and objectives of the thesis. It also includes a brief introduction to Baltic Yachts as a company and defines the research problem to the form of a question.

In the second section, the report discusses the possibilities for manufacturing titanium components in general. Evaluating benefits, constraints, and the client's wishes are evaluated as well as what manufacturing method would be best suited for the case study, and why.

The third section introduces additive manufacturing and possibilities when producing large titanium parts. The chapter focuses on the seven categories of AM defined by ISO/ASTM 52900. It also provides information about the methods, materials, main advantages, and disadvantage, and provides some examples.

In the fourth section, the report evaluates the AM techniques studied in the third section to determine how well they fit the hinge manufacturing case. Based on the evaluation, a manufacturing method will be recommended to Baltic Yachts with supporting justifications. The fourth section also covers the topics of optimization and prototyping.

In the fifth and sixth sections, the thesis presents end results and a gives out a summary of the thesis process. This section also assesses the possible future development steps.

2 MANUFACTURING OF TITANIUM PARTS

2.1 Manufacturing

In Figure 4 below, the three main manufacturing methods are illustrated. Formative manufacturing illustrated in the top row. Formative manufacturing uses molds or die sets to form a part. Examples of formative manufacturing where molten material is poured into a mold are die casting or injection molding. Other examples of formative manufacturing, where the material is being deformed into shape, are forging, or rolling.[7]

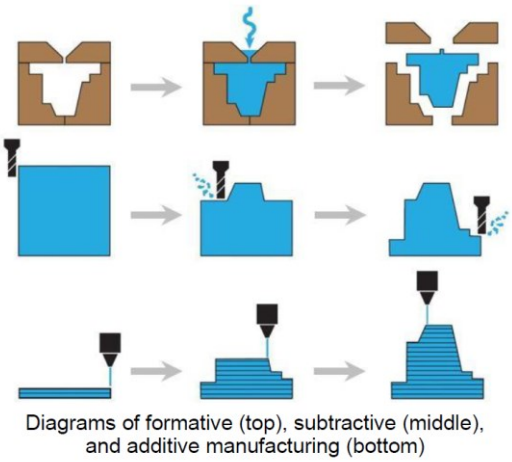

Figure 4. Manufacturing methods[8]

Subtractive manufacturing, middle row of Figure 4 creates or modifies parts by removing material. A great example of subtractive manufacturing is milling. Process starts from a blank or a billet block, where everything that is not wanted in

[7] Wohlers associates, 2022, Wohlers Report p. 19
[8] Wohlers Report, 2022, p. 19

the final product is being removed by a plethora of tools. The case study is currently made by milling. Besides milling, also cutting, grinding, and turning are methods of subtractive manufacturing.[9]

The bottom row of Figure 4 above depicts additive manufacturing. AM builds parts from scratch layer-by-layer. Some forms of AM can also add material to an already existing part, fixing or adding features. An example of AM method is material extrusion (MEX), where plastic material is extruded through a hot nozzle onto a building platform. [10] In addition to material extrusion, there are many other AM methods also available for different applications and materials.

The choice of main manufacturing methods depends on multiple factors such as the material being used, complexity of the product, required level of precision, and production volume. Also, Baltic Yachts interests play a role in choosing of the method.

2.2 Titanium

Titanium is the 22nd element in the periodic table, a metal that is silver in colour. Titanium is a common, though rarer than iron or steel. It is mined from various minerals in earth's crust. Since titanium is a chemical element, it can be found in 100% pure form. More often though, titanium is alloyed with other materials to enhance its properties. [11]

[9] Wohlers Report, 2022, p. 19
[10] Wohlers Report, 2022, p. 19
[11] Metal supermarkets, What is titanium?

The different alloys of titanium are called “grades”, which there are around 50. For example, grades 1-4 are nearly pure titanium, grade number 5 being one of the most used, and grades 7 & 11 being the most corrosion resistant. [12]

Titanium is a high valued material in industrial use. One of its most notable advantages is its strength, it has the highest strength-to-weight ratio of any metallic elements. There are more durable materials out there than titanium, but those materials are usually way heavier in comparison. Strength-to-weight ratio makes titanium highly valued in for example, aerospace industry, where weight is a crucial factor. [13]

Another benefit of titanium is its natural resistance against corrosion, which allows titanium to be used in harsh environment, such as marine and chemical industries. Titanium is also biocompatible, which means it is also suitable for medical use. [14]

Titanium has also its drawbacks. Due to its high strength and low thermal conductivity, it is difficult to machine, which can lead to high manufacturing costs. Due to same reasons, titanium is also difficult to cast and weld. Titanium is also reactive in high temperatures, which can lead to contamination during manufacturing. Titanium is also more expensive than other strong metals like steel or aluminium. [15]

These aspects of titanium make it a very good material in industries where high performance is needed with low weight. The price of titanium and difficulty to manufacture leads to increased costs, which adds to the fact that titanium is preferred only in high performance applications.[16]

---

[12] Metal supermarkets, What is titanium?
[13] One Monroe, What are the Pros and Cons of Titanium?
[14] One Monroe, What are the Pros and Cons of Titanium?
[15] One Monroe, What are the Pros and Cons of Titanium?
[16] One Monroe, What are the Pros and Cons of Titanium?

2.3 Titanium Grade 5 (6Al-4V)

Titanium Grade 5, also known as Ti-6Al-4V, is one of the most used alloys of titanium. Titanium Gr5 is composed of 6% aluminium and 4% vanadium, and small amounts of other elements. Titanium Gr5 has a high strength-to-weight ratio, good corrosion resistance, and is often used in aerospace, medical, and marine industries. It can be formed into various shapes, welded and is suitable for applications that require high strength and low weight. [17]

The hinge is made from Grade 5 titanium. The hinge requires high strength, as it is affected by the forces from the wings when sailing. Titanium grade 5 has also great corrosion resistance which suits well to harsh marine conditions. Low weight is also an added benefit, since Baltic Yachts competes in yacht lightness, so every saved kilogram is for the positive. The price and difficulty of manufacturing titanium are things to consider in further chapters, when evaluating alternative manufacturing methods.

2.4 Choosing the Main Research Subject

The hinge is made of titanium grade 5. Titanium grade 5 has great strength-to-weight ratio and natural resistance to corrosion. Both are great features for marine applications. Currently, the hinge is manufactured by milling, so naturally that won't be the focused method. Most probably, milling will still stay involved in the finishing parts of manufacturing process. This will assure, that the parts meet the precision required.

An alternative method for milling could be casting, though titanium is hard to cast, it is possible. Casting requires a mold, or a die set, which can be very expensive to

[17] Titanium Engineers, Titanium Grades

make. This is when the production volumes rise in significance. Most cast parts also need machining after to meet the precision required. The machining time would still be drastically reduced, when comparing to milling from a total blank.

The hinge has simple geometry, which caters for casting as the new manufacturing method. Unfortunately for casting, as Baltic Yachts projects are usually custom tailored for their clients, most parts have very low production volumes. This makes casting not very efficient method of manufacturing since expensive molds could be used only a few times due to low production volumes. The use of single time molds also leads up to wasted material, which should be avoided. Therefore, casting will not be the main research subject.

Another possible manufacturing method is additive manufacturing. AM is considered as a modern manufacturing method and strikes interest in Baltic Yachts. Baltic Yachts has an interest in AM because of its modernity in manufacturing world. In many cases, AM communicates lightness, high-performance, new technology etc. These thoughts might raise interest in Baltic Yachts clients, which can lead up to a successful contract in a competitive setting against other yacht building companies.

Interest in AM already is slightly towards additive manufacturing, but it has also other benefits for the case study. Since Baltic Yachts yacht projects are mostly custom made, AM is a great way to produce those low or even single piece volumes. As Baltic Yachts competes in lightness, AM might also open new ways to optimize by for example, producing complex structures, that are hard or even impossible to create with traditional methods. These complex structures could be for example., special infill patterns, strut-like structures, or internal features.

Another benefit in most AM methods is, that little to no material waste occurs. This is great, since one of the key problems with milling is material waste. Still, some AM methods produce material waste, for example, powder bed fusion process requires some percentage of virgin material power to work effectively. This

will be discussed more later. Also, most AM products need some kind of post processing to meet precision requirements, which will lead up to some material waste. Overall, material waste would still be drastically reduced when compared to subtractive manufacturing.

Additive manufacturing also has its drawbacks. The first challenge will most definitely be the size of our case study. The hinge has dimensions of 1400 mm x 300 mm x 320 mm and weights around 140 kilograms. The average size of a 3D printing bed is around 150 mm – 300 mm.[18] In industrial use, larger printing volumes are available, but it might still be challenging to find suitable machines for significantly larger parts. As the parts grow bigger, also printing time grows exponentially.

In Figure 5 below is an example of UltiMaker 3, an average sized material extrusion printer, where maximum build volume is 215mm x 215mm x 200 mm. Ultimaker is priced around 3000 EUR.[19]

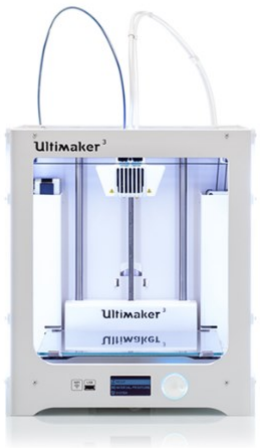

Figure 5. Ultimaker 3[20]

[18] Thomasnet, The Best Large Format 3D Printer, According to 1,500+ Customer Reviews
[19] UltiMaker, UltiMaker 3 product information
[20] UltiMaker, Homepage

The simple structure of the hinge devalues the usage of AM, producing difficult or plain parts are an identical process in AM. Compared to traditional manufacturing, where complex structures may be hard or even impossible to replicate, the possibility to print complex geometries can bring new possibilities when producing the hinge. Due to metal printing being relatively new. There might be some challenges in material selection, and pricing.[21]

AM is also preferred over other manufacturing methods when the costs are a driving factor. For example, in formative manufacturing, tooling can be very costly. AM methods do not require such tools when producing parts. Though, AM methods produce varying surface roughness and precision. No matter what the method would be, some afterwork is still required. This afterwork includes for example., drilling screw holes, boring fittings, correct surfaces that require a certain tolerance. Tooling costs would still be drastically reduced.[22]

In this thesis, additive manufacturing will be focused. The client's high interest in AM alone plays an important role in making of the decision. AM being a modern less-known manufacturing method that fairs well when producing unique parts, has lots of potential for research. AM might even open completely new ways of optimization, which can lead to weight and cost savings. This is highly valued within the high-performance marine industry.

[21] Wohlers associates, 2022, Wohlers Report p. 20-21
[22] Wohlers Report, 2022, p. 20-21

3 ADDITIVE MANUFACTURING

Additive manufacturing (AM) is a manufacturing method where material is joined together to produce parts from 3D data. This is how AM is defined by the ISO/ASTM 52900 terminology standard. In most cases of AM, material is joined layer by layer to form the final part, as opposed to formative and subtractive methods of manufacturing.[23]

AM as a concept is developed and demonstrated over 150 years ago and the first computer-based systems were demonstrated over 50 years ago. [24] The first commercialized systems came out in the late 1980s. In the beginning, additive manufacturing was restricted by various patents, which have then expired, which led to increase of popularity in the AM field.

Typically, when thinking about AM, it is usual to think about material extrusion (MEX), where molten plastic is extruded through a hot nozzle on to a building plate to create a prototype or decoration piece. Besides MEX, there are many other AM methods with their respective strengths and restrictions. AM is still widely used in prototyping, but advancements in AM technology have opened many new possibilities in final part and industrial use.

[23] Wohlers Report, 2022, p. 19
[24] Wohlers associates, 2022, Wohlers Report p. 22

Defined by ISO/ASTM 52900 standard, AM is divided into seven categories. This categorization is done by the form of material used and the binding process used to join the material. These methods are listed in the chart below. The terms and abbreviations are also defined by the ISO/ASTM 52900 standard. [25]

Table 1 Division of the AM processes

AM process	Abbreviation
Binder jetting	BJT
Directed energy deposition	DED
Material extrusion	MEX
Material jetting	MJT
Powder bed fusion	BPF
Sheet lamination	SHL
Vat photopolymerization	VPP

Next, the seven categories are introduced one-by-one. Each category gets a brief introduction with some schematics and examples, what are the strengths and disadvantages for each category; what materials can be used, and what are the main constraints. Due to the nature of the case study some methods will be mentioned briefly, and others are given more attention. The hinge is made from titanium and

[25] ISO/ASTM 52900:2021

requires high strength. For example, if some category can hardly produce metal parts, that method is not researched further.

3.1 Binder Jetting (BJT)

Binder jetting is an additive manufacturing method, where powder material is fused by glue-like binding fluid. Powder is deposited as thin layers onto building plate. After that, an inkjet moves over the building plate, applying binder fluid precisely on top of the powder material. The inkjet functions similar when printing on regular paper. After the inkjet has passed, the build plate is lowered by the thickness of one layer. This process repeats, until a part is complete. [26] In the figure 6 below, is a schematic about BJT.

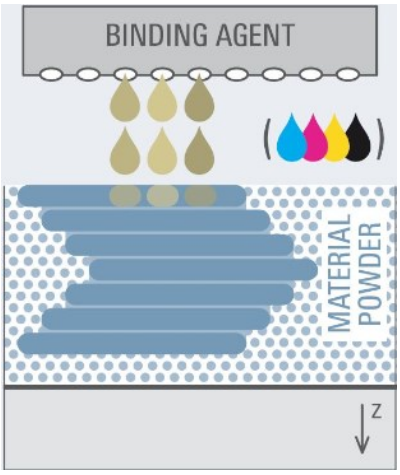

Figure 6. Schematic of BJT[27]

BJT process is a low energy method that produces high precision parts. No support structures are needed since the powder will support the part as it is forming. BJT feedstock includes materials such as foundry sands, ceramics, metals, or composites. Note that after the part is done printing, the materials are bound only by the

[26] ExOne, What is Binder Jetting?
[27] Wohlers associates, 2022, Wohlers Report p. 88

binding fluid. To achieve dense parts, they need to be cured (plastic) or sintered (metal). This process will shrink the parts by around 20%, which needs to be considered when designing the part. The shrinking process also leads to large amounts of internal stress, which can compromise the strength, or even crack the parts. This will be a significant challenge in large-scale parts. [28]

After heat treating, the parts are near net shape, but require some sort of post-processing to meet required precision. BJT has potential to be researched further. The parts shrinking 20% might cause a challenge. BJT will be discussed more in the application section.

3.2 Directed Energy Deposition (DED)

Directed energy deposition is an AM method, where metal material is being melted as it is deposited onto a build platform. Material is melted by a laser or electron beam. The material is usually in a form of powder or wire. DED has many similarities to the process of traditional welding. [29]

In directed energy deposition, the deposition head is usually mounted on a multi-axis motion system, an industrial robot for example. This allows material to be deposited anywhere the robot arm can reach. This motion system can then be mounted on rails to create parts of virtually any size. The use of industrial robot also allows to produce curved layers, which is not possible on most other AM methods.[30]

DED process results in near net shape parts, but the surfaces are rough. This process also leads to significant amounts of thermal stress, which introduces warping

[28] ExOne, What is Binder Jetting?
[29] Wohlers associates, 2022, Wohlers Report p. 90-92
[30] Wohlers Report, 2022, p. 90-92

and can compromise strength. To combat thermal stresses, thick build plates are used to distribute heat more evenly. Parts can also be heat treated to relieve the built-up thermal stress and refine inner structure.

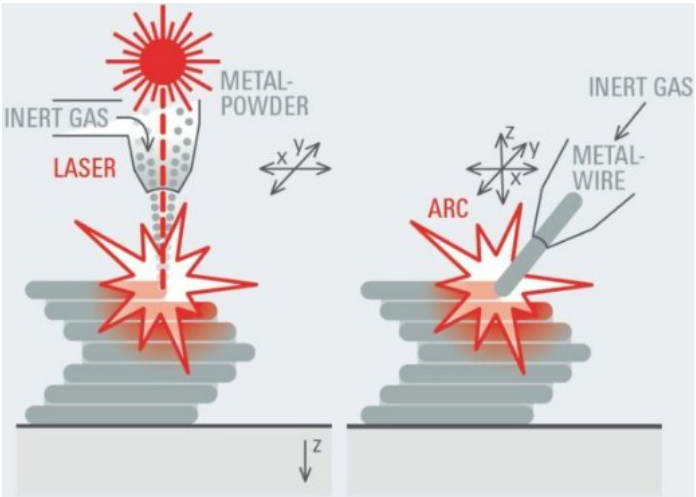

Figure 7. Schematic of DED[31]

After printing, parts need post-processing in the form of machining to meet required precision. In Figure 8 below is an example of DED printed propeller. The surface roughness is visible in the figure. DED methods offer faster deposition rates than most other AM methods. This combined with almost limitless build area, suits well for large metal products. Feedstock being in weldable wire-form is relatively cheap compared to some other feedstock materials, for example, fine powders.

A good example of DED process is WAAM, Wire arc additive manufacturing (WAAM) is an additive manufacturing method, that belongs to the DED family. WAAM works like many other AM methods, by depositing layers of material on top of each other, until desired outcome. In WAAM, the layers are fused by wire

[31] Wohlers associates, 2022, Wohlers Report p. 90-92

arc welding. [32] DED and WAAM will be discussed more in the application section, as they have plenty of potential to be the main manufacturing method for the case study.

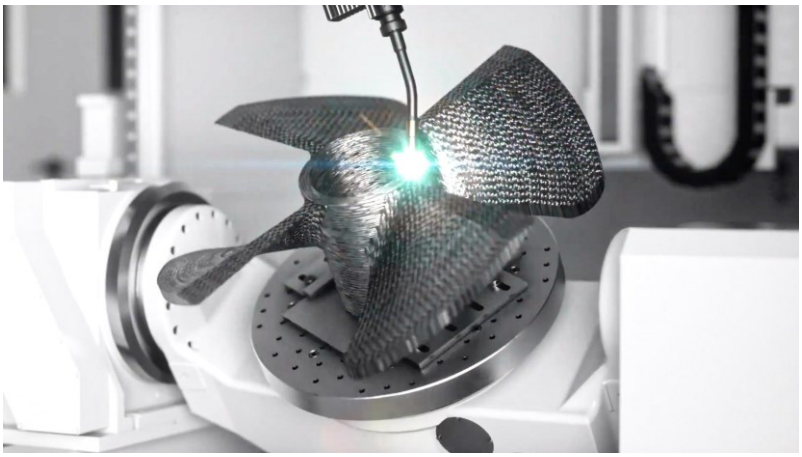

Figure 8. Example of DED

3.3 Material Extrusion (MEX)

Material extrusion is an AM process, where material is extruded through a nozzle. This nozzle is often heated, to partly melt the material used. This semi-liquid material is then fed through the nozzle that is attached to an extrusion head. This extrusion head or build platform moves horizontally. After a layer is complete the build platform moves down, or extrusion head moves up the thickness of one layer. A new layer is then created on top of the first one. This process repeats, until a part is finished.[33]

Commonly MEX printers use polymer filaments as material. This material is coiled like wire on a spool. Common materials include polylactic acid (PLA) and acrylonitrile butadiene styrene (ABS). In addition to thermoplastics many other materials

[32] RAMLAB, WAAM 101
[33] Wohlers associates, 2022, Wohlers Report p. 78-79

are available. Gels, ceramics, concrete, metal-filled filaments, and composites to name a few. If the goal is to print metal, the filament is filled with small particles of metal. When printing is done, the part requires sintering, which results in a nearly dense metal part. This sintering process causes the part to shrink.[34]

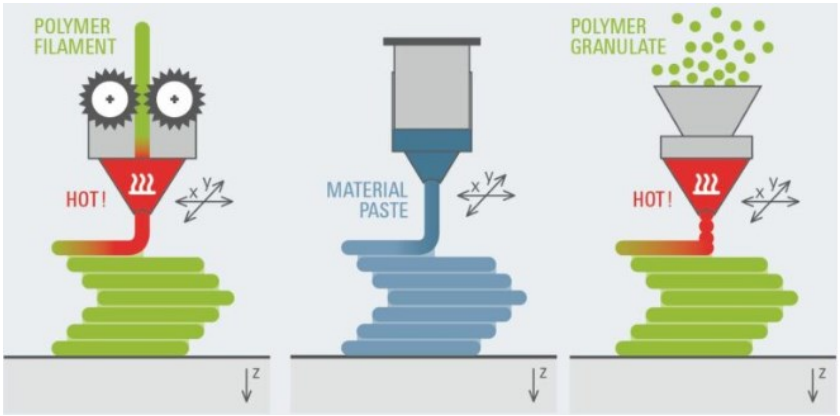

Figure 9. Schematic of MEX[35]

MEX systems are among the most used in AM scene. This is due to the relatively easy operation, and less expensive equipment. Anyone can go and buy a material extrusion-based 3D-printer with less than 500 Euros. MEX is also one of the most popular methods of printing parts among hobbyists. For example, the prototype of the case study is printed from PLA, using MEX process. More about this in the prototyping section. [36]

There are some challenges in MEX printing regarding our case study. The first one being the size of the case study. As stated earlier, the average dimensions of a

[34] Wohlers Report, 2022, p. 78-79
[35] Wohlers Report, 2022, p. 78-79
[36] Wohlers Report, 2022, p. 78-79

printing bed are around 150 mm - 300 mm. There are way bigger printing systems out there, but they are way harder to come by, and are expensive. [37]

Parts produced by MEX are anisotropic, which means, that the physical properties vary depending on the direction of stress. [38] This is due to the printhead extruding new material layer-by-layer to the already cooled down layer. This leads to the layers not bonding completely. This causes weakness in the products (usually in z-direction). To maximize strength in MEX products, the build direction plays a high role.

Another challenge is feedstock. While MEX is capable of printing with metal in-fused filaments, it cannot print fully metal parts. Every metal part printed with MEX needs post processing in a form of heat treatment, where the polymer based binding agent is burned away, and the metal parts get sintered into a nearly dense metal part. This process also shrinks the product, which becomes a problem when dealing with large parts. After sintering, it is also recommended to heat treat the parts for better strength.

While it might technically be possible to create the hinge using MEX, it is not very efficient. Large enough systems are hard to come by printing times are slow, products require lots of post processing, and they might not be strong enough even after heat treatment due to being anisotropic.

3.4 Material Jetting (MJT)

Material jetting is an AM process where droplets of build material is deposited on to a build platform. A print head moves across the building area, building a layer drop by drop. There can be one or multiple print heads to speed up this process.

---

[37] Thomasnet, The Best Large Format 3D Printer, According to 1,500+ Customer Reviews
[38] Termipankki, anisotropic

Materials being used by MJT are often photopolymers or wax-like substances. MJT systems cannot build parts from solid metal. The closest to metal within the MJT process, are conductive inks.[39]

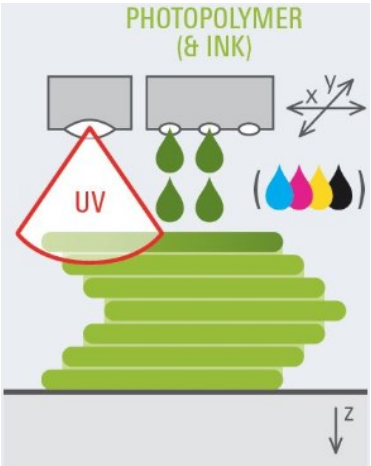

Figure 10. Schematic of MJT[40]

MJT systems can be used in creation of wax parts, that are being used as molds for casting for example, jewellery. MJT can effectively produce very precise coloured visualization models or prototypes. MJT requires the use of support structures, which need to be removed after. Due to the technology behind MJT, it is not capable of producing parts from metal. Metal cannot be dispensed though the binder jet. Therefore, it will not be discussed further our case study in mind.

3.5 Powder Bed Fusion (PBF)

PBF is a process, where regions of powder are fused together using thermal energy. This thermal energy is often from a laser or electron beam. Precisely melted

[39] Wohlers associates, 2022, Wohlers Report p. 86-87
[40] Wohlers associates, 2022, Wohlers Report p. 86

powder then joins the previous layer. When one layer is fused, a new layer of powder is spread on top of the previous one.[41]

PBF feedstock includes wide range of polymers and metals. All materials are in powder form ranging from 50 µm to 100 µm in particle size. The particle size also determines the layer thickness in PBF. When forming parts from polymers, loose and unused powder acts as support. Therefore, polymer printing does not require separate support structures. After a part is finished, it can be lifted from print chamber and excess loose material brushed away. Unused material can be reused, though it degrades slowly each time it is exposed to heat in the build chamber. To ensure good print quality, used material should be mixed with fresh material.[42]

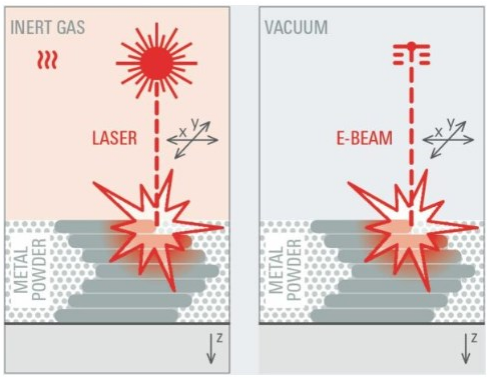

Figure 11. Schematic of PBF[43]

When printing metals in PBF, materials are typically metals that can be easily welded or cast, which titanium is not. Different alloys of titanium are still included in the PBF feedstock. Opposite to polymers, metal PBF needs support structures to anchor parts to the build plate. Thermal changes in the build chamber are high,

[41] Wohlers associates, 2022, Wohlers Report p. 83-86
[42] Wohlers Report, 2022, p. 83-86
[43] Wohlers associates, 2022, Wohlers Report p. 85

which can lead to significant thermal stress and distortion. To combat this distortion, build plates are usually thick to function as a heat sinks. The same concept of material degradation applies to metal powders. This causes some material waste when the powder renders unusable after a certain amount of uses. [44]

PBF systems are expensive compared to other forms of AM. Feedstock powder is expensive and the operating costs are high. Laser uses high amounts of power, and the build chamber requires inert gas to work safely. Material degradation also adds to the operating costs. [45] The build chamber size is again a challenge if the case study part is being printed as a single piece. On the other hand, PBF produces near net shape parts, that are high in quality and have desirable mechanical properties. To further enhance the mechanical properties, parts can be heat treated to refine the material structure after the printing process.

Due to parts being near net shape, some post processing is required in a form of CNC milling to meet the required precision. Some companies have interesting solutions for this and produces hybrid machines that have PBF and CNC integrated into one. Solutions like this could be perfect for the case study since post-processing will be inevitable. This method is worth looking more into.

3.6 Sheet Lamination (SHL)

Sheet lamination is an AM process, where sheets of material are combined to form parts. Materials can be for example papers coated in adhesive, which are then cut into shape with a cutter. Foil or metal tapes can also be used to create metal parts with a similar manner. [46]

---

[44] Wohlers Report, 2022, p. 83-86
[45] Wohlers Report, 2022, p. 83-86
[46] Wohlers associates, 2022, Wohlers Report p. 92-94

Ultrasonic additive manufacturing (UAM) is a form of SHL, where ultrasonic welding is used to bond thin metal layers together. This method works only for metal applications, build speed is determined by the thickness of layers. UAC is also not suitable for applications that require high strength, due to layers not fusing completely together. [47]

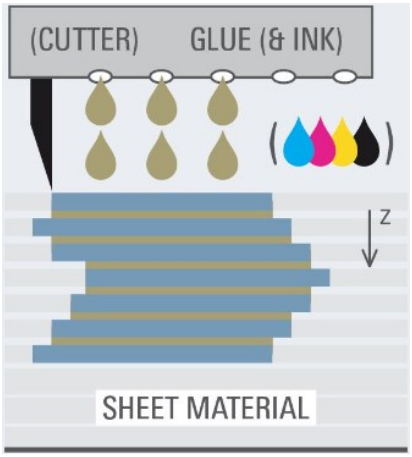

Figure 12. Schematic of SHL[48]

SHL in general is one of the older AM methods and is mainly used in rapid prototyping and to produce composite parts. In addition to low strength, the feedstock is usually in a form of sheets or rolled, after cutting the material into shape, there will be lots of material waste left behind. This is not great since material waste is one of the original problems with milling as the manufacturing method in the case study. One benefit with the feedstock being on rolls or sheets, is that they are among one of the cheapest forms of feedstock in the AM space.

[47] Wohlers Report, 2022, p. 92-94
[48] Wohlers associates, 2022, Wohlers Report p. 93

3.7 Vat Photopolymerization (VLL)

Vat photopolymerization is an AM process, where liquid photopolymer is being cured by light-activated polymerization. Resin is poured into a container, then a laser or UV light beam is used to cure specific parts of the resin to create a finished layer. After the layer is finished, building platform sinks into the resin for the thickness of one layer. [49]

One of the main advantages of VPP systems are their capability to produce high-resolution parts with a reasonable cost. With VPP it is possible to create layers only 10 µm in height. VPP is not a self-supporting method, which means that it requires support structures, which need to be removed after the printing process. VPP parts also requires curing and washing for post-processing.[50]

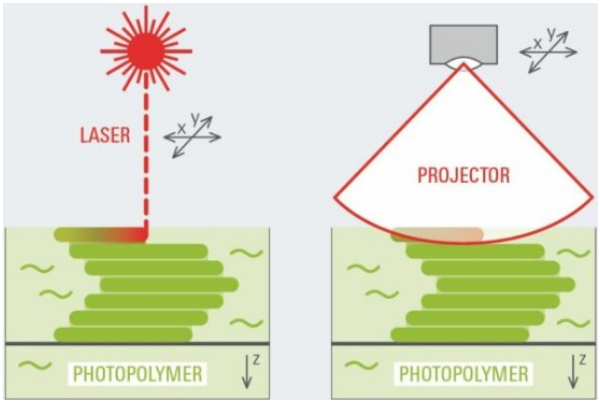

Figure 13. Shematic of VPP[51]

With VPP it is possible to create parts also from ceramics and metals, but the process is like MEX metal printing, where ceramic or metal particles are added into the resin. Similar to MEX, these parts require sintering to create a near full density

[49] Wohlers associates, 2022, Wohlers Report p. 80-82
[50] Wohlers Report, 2022, p. 80-82
[51] Wohlers associates, 2022, Wohlers Report p. 80

part. During sintering, the part will shrink in size. This sintering process might also compromise strength of the part. Other big disadvantages with our case study in mind, are VPPs' poor scalability for large parts and due to its high precision, printing times are slow.[52]

VPP is a great AM solution, if the parts are relatively small, and require high precision. Examples of this could be high precision molds or medical applications. Not so much in the larger-scale high strength industrial applications. Therefore, VPP will not be discussed further.

[52] Wohlers Report, 2022, p. 80-82

4 APPLICATION

In this section, the theory from chapter 3 is being applied for the case study. The main advantages and disadvantages are evaluated and if there is a real possibility in producing the case study. Methods from section 3 that will be discussed, are BJT, PBF and DED. In this section, optimization and prototyping are also discussed.

4.1 Applicability

The best suited AM methods for manufacturing the hinge from section 3 are BJT, PBF and DED. Among these methods DED and PBF can produce finished near net shape parts from metal. BJT can also produce parts from metal, but due to the binder fluid process, the metal particles will not fuse together until post heat treatment. This binder fluid will also burn away during this process. This heat treatment leads up to 20% shrinkage. This is very challenging with large pieces. The case study scaled up by 20% equals to dimensions of 1750 mm x 375 mm x 400 mm. This leads to the shrinkage ranging from 60 mm to 280 mm which sounds unpredictable. Compared that to a part that is 100 x 100 x 100 mm, the shrinkage would be only 20 mm per dimension, which is much more predictable and easier to compensate in CAD. The process of shrinking also predisposes the products to large amounts of thermal stresses that can compromise strength or even crack the piece.

Another difficulty to the shrinkage is the size. System manufacturers such as Desktop metal, Digital metal, ExOne (The company was acquired by Desktop Metal in 2021), GE Additive and HP manufacture systems for metal BJT. [53] The largest systems for metal applications among the manufacturers, come from Desktop metal.

[53] Wohlers associates, 2022, Wohlers Report p. 393-394

Desktop Metal X-series X160Pro, claims to be the world's largest binder jet system for metal, ceramic or composite parts. This system provides 800 x 500 x 400 mm build box and build rates up to 3120 cc/hr. [54] Even when claiming to be the world's largest BJT system for metal applications, the build volume is too small for the case study. Even if the hinge was cut in half, the build volume would still be too small, when scaled up to 120% size. Picture of the X160Pro system is in Figure 14.

BJT was included into the application section due to its possibility to create large parts fast compared to some other AM methods. The possibility to print metals was also interesting. Due to part shrinkage and size, it seems that with the technology available now, it is not possible to manufacture the hinge by BJT.

Figure 14. X160Pro[55]

After concluding that BJT is not capable of producing the case study, we are left with PBF and DED. Both methods can manufacture dense near net shape parts from metal. Shrinkage will not be an issue, as it is with BJT. BPF feedstock includes

[54] Desktop Metal, X-series
[55] Desktop Metal, X-series

Titanium Gr5, though it is very expensive. PBF suitable titanium powder can cost up to 343$ / kg. [56]

With PBF methods, it is possible to create very precise parts with desirable mechanical properties. The case study in mind, having the ability to create precise parts straight from the system is not that important, due to parts requiring post process work anyway.

Disadvantages of PBF are high operating costs and printing chamber sizes. Products are prone to thermal stress, due to many temperature cycles during printing. PBF also produces some material waste in a form of degenerating material.

The main issue with PBF is to find systems large enough for the case study. PBF requires a closed chamber, which means that the part needs to fit inside. The closest system to fit the hinge was from a Chinese system manufacturer Bright Laser Technologies. BLF offers an SLM system called BLT-S800, that has a print volume of 800 x 800 x 600 mm. [57] This print volume is not enough for the application. The only way to fit the hinge, would be to divide it into smaller pieces.

When researching by terms such as “world’s largest BPF system” an article from a website called 3dprint.com was found. The article introduces a system from EPlus3D claiming to be possibly largest PBF metal printer with a build chamber volume of 1258 x1258 x 1350 mm.[58] Picture of the system is in Figure 15 below. Even this system will not fit the hinge in one piece. Difficulties due to size and expensive operation lead PBF to not be the best suited method for the hinge.

---

[56] Wohlers associates, 2022, Wohlers Report p. 112
[57] Wohlers associates, 2022, Wohlers Report p. 360
[58] 3DPrint, EPlus3D Launches Possibly World’s Largest PBF Metal 3D Printer with Nine Lasers

Figure 15. BLT-S800[59]

DED, like PBF produces near net shape parts from metal materials. The material is being melted as it is deposited using a high-powered energy source. The material is usually in a form of wire, which makes it cheaper, when compared to PBF powder. Titanium Gr5 is included in the available materials.

When researching DED machines, the size of the case study is not as big a problem. It creates challenges by restricting most of systems, but there are manufacturers that provide machines for even larger applications. Systems, such as TruLaser cell 7040 from Trumpf has a build area of 4000 x 1500 x 750 mm, or BLT-C1000 from Bright Laser Technologies which can fit parts up to 1500 x 1000 x 1000. TruLaser cell 7040 is designed towards sheet metal applications, such as car body panels. Dense parts are also possible to manufacture. Both machines are very expensive, but BLT offers printing services, which could be considered. Picture of BLT systems can be found below in figure 16. Then an investment for machine would not be required. [60]

[59] Bright Laser Technologies, Homepage
[60] BLT, Printing service

Figure 16. BLT printers[61]

Due to material being melted with a wire arc, it creates surfaces that look like traditional welding. Post processing is absolutely required for the areas, that require tolerances. CNC machining is also required if smooth surfaces are desired. This is where some system manufacturers have come up with hybrid DED machines, which are able to create parts and post process them inside one system.

One manufacturer, manufacturing hybrid systems, is DMG Mori. An example of hybrid machine from DMG Mori is LASERTEC 125, which is also depicted below in figure 17. This machine has DED combined with 5-axis milling. The maximum build area is 1335 mm x 1250 mm x 900 mm, which is slightly smaller than the case study. The maximum work piece weight is 2000 kg, and the equipped laser power standard is 3kW. [62] DMG Mori offers even bigger machines than LASERTEC 125, but they are very expensive. If the case study part is split into two pieces, it could be produced in a hybrid system like this. The parts could be joined back to one for example mechanically or by welding.

[61] Bright Laser Technologies, Homepage
[62] DMG Mori, LASERTEC 125 product info

Figure 17. LASERTEC 125[63]

Alternatively, the deposition head in DED can be mounted to a motion system to eliminate the need for closed build chamber. An example of DED method like this, is WAAM. Wire arc additive manufacturing is a process, that belongs to the DED family. Fundamentals of WAAM are similar to other DED methods, by depositing layers of metal by melting. In WAAM the material is deposited by wire arc welding.[64]

A key benefit to formerly presented systems, WAAM does not require a build chamber. The deposition head is integrated for example to an industrial robot with an integrated power source. This makes the print area to depend on the reach of the robot. The reach of said robot can be expanded more by mounting it on a set of rails or some other motion systems, creating a virtually unlimited build area. [65]

Another great benefit of WAAM is the relatively low start-up costs. WAAM production can be started by investing in an industrial robot, welder, power-source,

[63] DMG Mori, LASERTEC 125 product info
[64] RAMLAB, WAAM 101
[65] RAMLAB, WAAM 101

and a control software, which will amount to only a fraction of the costs when compared to a closed chamber system. In WAAM, the material feedstock is usually in wire form, which is cheaper alternative to metal powders, such as PBF. Additionally, WAAM offers a higher deposition rate when comparing to other AM methods, which caters for large part production.[66]

As any other DED method, also WAAM requires post processing. WAAM parts are subject to large amounts of thermal stress, which can compromise strength. CNC milling is also required to deal with the surface roughness. Parts need to be heat treated to reduce the risk of premature failure, and to refine the material structure. [67]

For example, system manufacturers RAMLAB and WAAM3D provide turnkey solutions for WAAM systems that include everything needed for production. Systems like this include robot, hardware, software, and installation. Both companies have successfully created projects in similar scale than the case study hinge. Lots more information about systems and project can be found from their websites.[68] [69]

Some WAAM companies were contacted in hopes of getting more information about WAAM material strength capabilities and a quotation for manufacturing the hinge. In the responses, valuable information was given, but it cannot be published. Unfortunately, due to the complexity of the topic and the short notice, no quotes made it to the thesis. Any further information and price estimations from the contacts will be sent directly to Baltic Yachts when they are available.

---

[66] RAMLAB, WAAM 101
[67] RAMLAB, WAAM 101
[68]RAMLAB, Homepage
[69] WAAM3D, Homepage

4.2 Optimization

If the hinge is manufactured by AM, optimization should be considered. Section about optimization is kept brief, due to it being only a secondary focus in this thesis. The first step to optimization comes in the form of waste reduction. AM reduces material waste, which allows cost savings. Every material particle saved also lowers the carbon footprint of in production.

The hinge has a simple structure throughout the whole model. This part has been developed milling as the manufacturing method in mind. One great benefit for AM is, that it can produce complex structures, that are very hard or even impossible to recreate using milling. If the part is being printed without any modifications, this advantage is lost. The most efficient method would be to develop the part from beginning with AM in mind. Material should be placed only where it is needed.

Different sorts of infill structures become available, internal features, such as cooling channels are possible, topology optimizations can be done to calculate, where material needs to be deposited without compromising the strength. All optimization possibilities would drive down material usage, and therefore help making the products lighter, and drive the costs down in the process.

Next, an example of an optimization process is shown. The optimization and FEM calculations are done with Siemens NX software. All results from now on are for reference only. All forces are modified, that they do not represent the actual values. This is to protect the information.

First, parameters for stress calculations are set for the hinge. Green represents the part in question, which has been fixed to place from bolt holes. The constrains are represented by blue in figure 19 After fixing, forces are applied from a sheet provided by Baltic Yachts. Forces listed in that sheet cannot be publicized. They are marked with red arrows in figure 19.

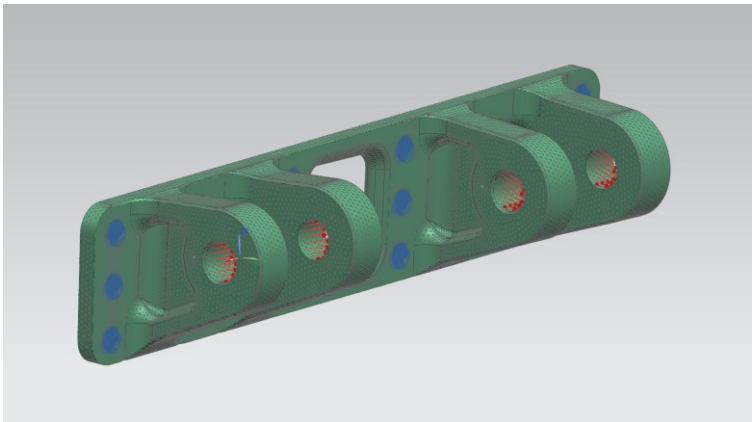

Figure 18. Model before FEM analysis

After setting the parameters for FEM calculations, the results will be calculated. The main results can be found in Figure 20. The number and locations of displacement are shown by colours. The simulation is representing normal steady state sailing. The maximum displacement is located around the end of rear pin bracket (ca. 1.8 mm). Something that is missing from calculations are the hull pins, that connect the hinge to the wing. If the pins were in the calculations, displacement would be even less. A thing to note is also the lack of displacement in middle area between the brackets.

The hinge is bolted to the hull of the yacht using twelve bolts. The lack of displacement in the middle section raises a question if that section is required at all. That would benefit the manufacturing process, as the part size would be halved. The yachts hull is made from composites which has some flex to it. When sailing, this middle part might make that section more rigid and ensure that the pins keep aligned.

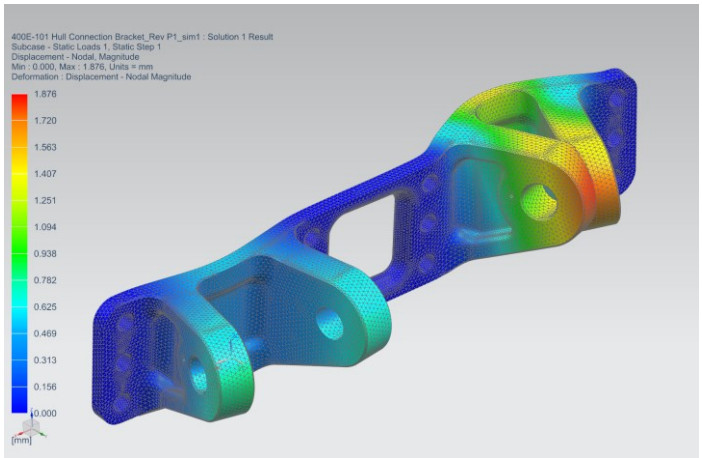

Figure 19. Maximum displacement

When looking at a stress diagram, it adds to the theory of the middle part not taking up any significant force. Most of the stress is taken up by the bolting points and the brackets roots. This model has been constrained in all directions by the bolt holes. Again, when sailing, the hull has some flex to it. This middle part plays a higher role than the simulation suggests. Still, the possibility of removing said middle part could be researched. If crucial, this middle part could be left out of the AM manufacturing process, and then bolted with external ridges after. This would keep the rigidity, and the size required for manufacturing would be reduced.

After FEM calculations, a simple topology optimization model with NX will be created. To create this TO model, a mock-up version of the original CAD-file is required. This mock-up piece is not an exact replica of the original and will be used as design space for the optimization. A picture of the model is in Figure 20 below. This mock-up is modelled by using Siemens NX.

After the creation of the mock-up model, the part is constrained by the bolt holes, similar to FEM process. Second the design space and features are defined for forces application. Forces applied to this mode are the same used in the FEM calculations. The piece is optimized to minimize strain energy subject to mass target. This means that the part is optimized to best suit for the stresses it is subject to,

within a specified mass target. The mass target was set to 100 kg, when the weight of the original hinge is ca. 140 kg.

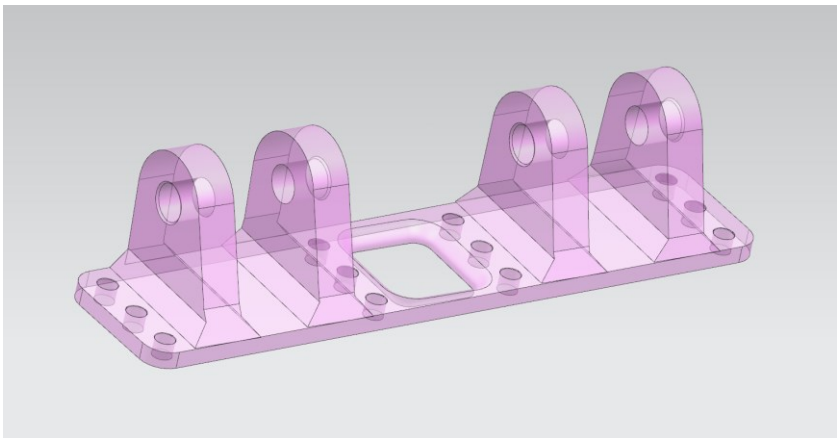

Figure 20. Mock-up hinge

In Figure 21 below is an example of a finished optimization. The results are only for reference, but it is possible to make some observations. The first observation was the lack of middle part ridges. This optimization suggests that the ridges could be removed. This would result in some weight reduction and the individual part size significantly reduced. A smaller part size would open more manufacturing possibilities. To ensure rigidity, the middle part could be separate, and combine the two hinge pieces.

Significantly more material is removed from the front pin (left of the Figure 21). The front pin takes on less stress than the rear one. Some hollowing can be seen in the structure, which makes the part lighter. This sort of a structure is already very challenging to produce with milling, but easy to produce with AM. It is important to note is that the results are only for reference. They depict only, how an optimization using TO could look like. This model had a weight of 98 kg, which is almost 30% less than the original weight.

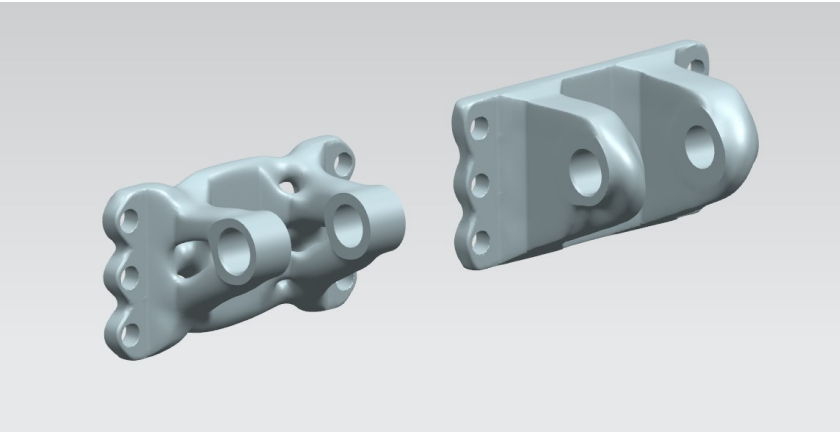

Figure 21. Example of TO (Reference only)

4.3 Prototyping

From the beginning of this thesis, it was discussed among the participants, how a prototype of some sorts would be great addition to have. At first, it was planned to create a metal prototype using AM. This prototype was scheduled to be produced near the end of the thesis. Due to limited time, the prototype was never a top priority, and the plan would be scrapped if it threatened the schedule. Unfortunately, the plan for metal prototype did not proceed.

Near the end of the thesis, the subject of prototyping was brought back. It was agreed that there is not enough time to plan and print the part from metal. It was still possible to print a prototype out of PLA. This prototype was printed from the original hinge CAD-model provided by Baltic Yachts and is in a scale of 1:10.

In Figure 22 below, the hinge is sliced using UltiMaker Cura. UltiMaker Cura is a slicing software, which uses an open-source slicing engine. Slicing is a process, where a CAD model is converted from 3D model to build instructions for a printer.

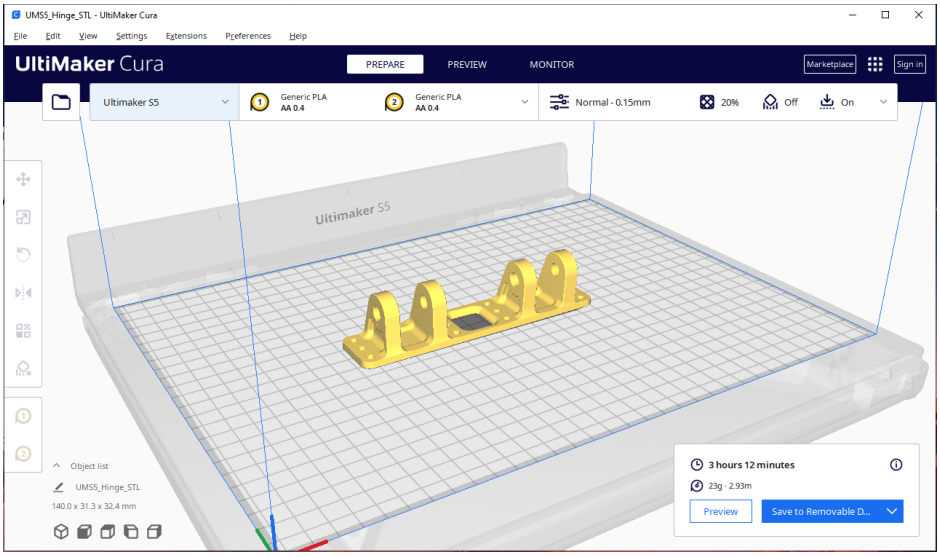

Figure 22. UltiMaker Cura interface

This prototype was printed from a common polymer filament polylactic acid (PLA), using a 0.4 mm nozzle. The prototype has an 20% infill, which means that the part is not solid, but filled with triangle shaped structures. This reduces material usage and weight in the final part. Support structures are added to areas with overhang. The supports are done using the same PLA filament, as the rest of prototype. The part resolution is 0.15; it determines the print quality and sets the layer height when printing. The lower the resolution, the better the part.

The prototype was printed with an UltiMaker 3 material extrusion printer in Technobotnia of VAMK. The whole printing process took 3 hours and 19 minutes. Pictures of the printing process can be seen in Figure 23 below.

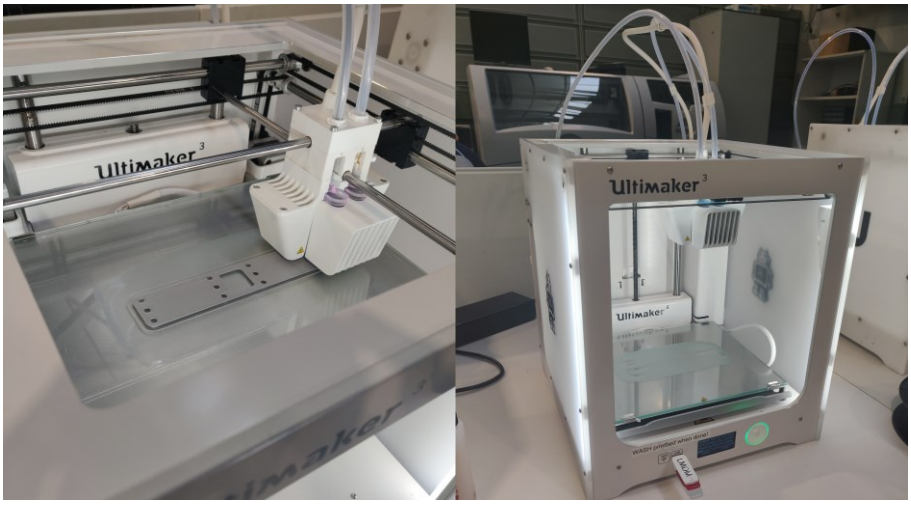

Figure 23. Prototype printing in progress

This protype came out well for the use intended. In figure 24 below, the prototype can be seen. The printing quality is decent compared to the time it took. Some defects can be seen around the overhang areas. Overall, the printing process went well, and the prototype serves its purpose as a visual showpiece.

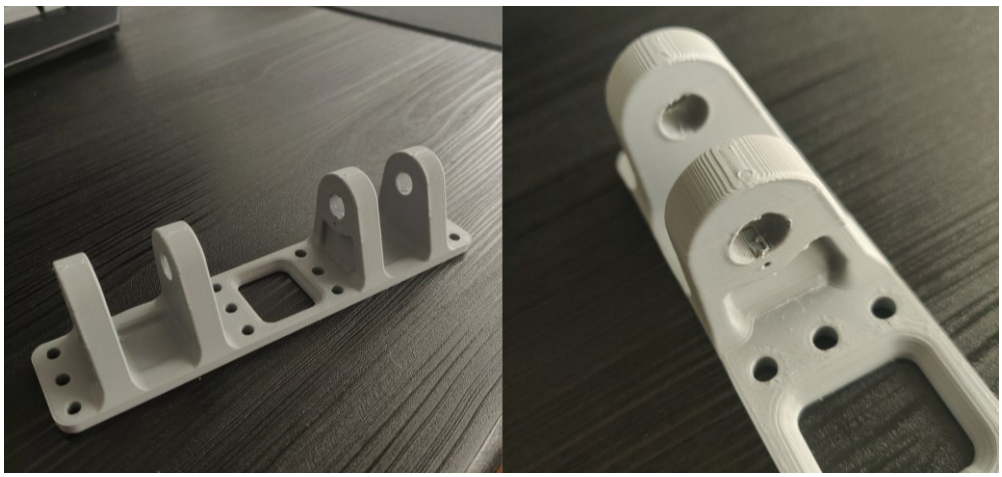

Figure 24. Finished prototype

5 RESULTS

The main challenges in manufacturing the case study from titanium, are the size and material availability. The longest dimension being 1400 mm, that limits the manufacturing possibilities.

Producing parts from titanium with AM in general does not seem to be an issue. The research shows that it has been formerly done, even to the scale of the hinge. Using titanium as material causes some challenges, but production is still possible. Material availability is limited and has a high price. In the future, this price and material availability will likely change for better.

PBF and DED processes can produce dense metal parts with desirable mechanical properties. These properties can be further enhanced with post manufacturing heat treatment. In addition to heat treating, AM products require some post processing to meet the required precision. This can be done with for example, CNC milling. Milling leads up to some material waste, but it would be significantly less than originally.

Based on the research, the case study could be manufactured by directed energy deposition process WAAM. With WAAM it is possible to create parts with virtually no size limitations, eliminating one of the main challenges. WAAM also has lower start-up costs, when comparing to closed chamber AM systems. WAAM produces near net shape parts, that require post processing in forms of heat treatment and CNC machining to ensure desired precision.

Getting actual pricing information proved to be a challenge. Requests for quotation were sent to companies, but the replies did not arrive in time. Also, most of information about the original manufacturing costs were classified. Unfortunately, a cost comparison is not possible due to lack of information.

Optimization plays a high role in the future, when considering AM as the manufacturing method. Most likely parts need a redesign to fit and fully utilize AM capabilities. Optimization is then directly connected to material reduction. This enables the end parts to be lighter, which also drive the costs down. In addition, every shaved gram is also saved material. Less material waste is an important benefit also for the environment, on the road to carbon neutrality.

6 SUMMARY AND FUTURE

The focus of the thesis was to research the possibilities of alternative manufacturing methods for the case study. A suitable method was found through research and suggested to Baltic Yachts. The study was carried out within the planned schedule.

As the outcome suggests, additive manufacturing DED could produce parts from titanium for the scale of the case study. Next steps would be to research the optimization of the hinge, or any other custom titanium part manufactured by traditional methods. Some speculation about optimization was included, but not to a great extent. If considering producing parts using AM, it opens many possibilities in optimization that cannot be dismissed. These could include features, such as inner channels, infills to lighten the structure, complex designs using topology optimization and so on.

Before any sort of optimization could be done, they need further research. In the long run, optimization will most definitely reduce material usage and bring the weight of the parts down. Both features are valued within Baltic Yachts.

Additive manufacturing is developing rapidly in the manufacturing space. When comparing what was possible to five years ago to today, the differences are drastic. If this development continues at the same pace, producing parts like this will be even more accessible. Material and system prices will decline over time, and AM gains yet more benefit in the competition over other manufacturing methods.

REFERENCES

3DPrint, EPlus3D Launches Possibly World's Largest PBF Metal 3D Printer with Nine Lasers. Accessed 17.4.2023 https://3dprint.com/295444/eplus3d-launches-possibly-worlds-largest-pbf-metal-3d-printer-with-nine-lasers/

Baltic Yachts, About us. Accessed 10.2.2023 https://www.balticyachts.fi/about-us/

Baltic Yachts, Operation. Accessed 12.2.2023 https://www.balticyachts.fi/contact/

BLT, BLT-S800, Accessed 17.4.2023 https://www.xa-blt.com/en/equipments/blt-s800/

BLT. Products and services. Accessed 17.4.2023 https://www.xa-blt.com/en/ps/pro03/

Desktop Metals. X-series. Accessed 17.4.2023 https://www.desktopmetal.com/products/xseries

DMG Mori, LASERTEC 125, Accessed 18.4.2023 https://uk.dmgmori.com/products/machines/additive-manufacturing/powder-bed/lasertec-30-slm

DMG Mori, LASERTEC 125, Accessed 17.4.2023 https://en.dmgmori.com/products/machines/additive-manufacturing/powder-nozzle/lasertec-125-ded-hybrid

Engine support by WAAM Accessed 1.3.2023 https://energiaa.vamk.fi/osaaminen/moottorin-tuen-tulostus-waam-tekniikalla/

ExOne. What is Binder Jetting? Accessed 10.4.2023 https://www.exone.com/en-US/Resources/case-studies/what-is-binder-jetting

ISO/ASTM 52900:2021, Accessed 30.3.2023 https://www.iso.org/standard/74514.html

Markforged. 3D Printer Types & Technologies, Accessed 27.3.2023 https://markforged.com/resources/learn/3d-printing-basics

Metal supermarkets. 2021 What is Titanium? Accessed 22.3.2023 https://www.metalsupermarkets.com/what-is-titanium/

One Monroe. 2016. What are the Pros and Cons of Titanium? Accessed 22.3.2023 https://monroeengineering.com/blog/pros-and-cons-of-titanium/

RAMLAB. homepages, Accessed 25.4.2023 https://www.ramlab.com/

RAMLAB, WAAM 101, Accessed 27.3.2023 https://www.ramlab.com/resources/waam-101/

Termipankki, definition of anisotropy, Accessed 13.4.2023 https://termipankki.fi/tepa/fi/haku/anisotropic

Titanium Engineers, Titanium Grades, Accessed 23.3.2023 https://www.titaniumengineers.com/titanium-grades.html

Thomasnet, The Best Large Format 3D Printer, According to 1,500+ Customer Reviews, Accessed 9.4.2023 https://www.thomasnet.com/articles/custom-manufacturing-fabricating/best-large-format-3d-printer/

UltiMaker, UltiMaker 3 product information https://ultimaker.com/3d-printers/ultimaker-3

WAAM3D, homepages, Accessed 17.4.2023 A Global Leader In WAAM Technology & Solutions | WAAM3D

Wohlers associates. 2022, Wohlers Report 2022: 3D Printing and Additive Manufacturing Global State of the Industry

Yachting world, The world's most radical yacht? Onboard Flying Nikka, Accessed 12.3.2023 https://www.yachtingworld.com/yachts-and-gear/mills-flying-nikka-americas-cup-tech-med-racing-circuit-130684