Eeli Stick

Bucket Brigade Delay

Metropolia University of Applied Sciences

Bachelor of Engineering

Degree Programme of Electronics

Bachelor’s Thesis

1 June 2023

Abstract

Author:	Eeli Stick
Title:	Bucket Brigade Delay
Number of Pages:	20 pages + 0 appendices
Date:	1 June 2023
Degree:	Bachelor of Engineering
Degree Programme:	Electronic and Automation Engineering
Professional Major:	Electronics
Supervisors:	Jonte Knif, Project Manager
	Heikki Valmu, Principal Lecturer

The aim of this project was to design a bucket brigade delay. Once designed completely, the delay would be modified to fit Knif Audio's synthesizer.

Firstly, the thesis covers delay's operating principles in general, after which it introduces how the delay works more in-depth.

Because of supply difficulties it was not possible to build a final working prototype. However, the filter section was built on a breadboard. It was also measured and compared to the simulation results got from Microcap circuit simulator.

As a result of the project precise schematic designs were developed, from which the final product can be manufactured later.

Keywords: audio, delay

Tiivistelmä

Tekijä:	Eeli Stick
Otsikko:	Bucket Brigade -viive
Sivumäärä:	20 sivua + 0 liitettä
Aika:	1.6.2023
Tutkinto:	Insinööri (AMK)
Tutkinto-ohjelma:	Sähkö- ja automaatiotekniikka
Ammatillinen pääaine:	Elektroniikka
Ohjaajat:	Projektimanageri Jonte Knif
	Yliopettaja Heikki Valmu

Työn tarkoitus oli suunnitella mahdollisimman pitkälle Bucket Brigade -periaatteella toimiva viive-efekti audiokäyttöön. Valmis laite muokattaisiin sopivaksi Knif Audion syntetisaattoriin.

Työssä käsitellään viive-efektin toimintaperiaate ensin yleisellä tasolla, minkä jälkeen käydään läpi tarkemmin BBD-laitteen toiminta.

Toimitusvaikeuksien takia laitteen valmista prototyyppiä ei voitu rakentaa, mutta suodin testattiin ja mitattiin koekytkentälevyllä. Mittaustulokset vastasivat Microcap-ohjelmalla tehtyjä simulaatioita.

Projektin tuloksena syntyi tarkat ja perusteelliset suunnitelmat, joiden pohjalta valmis tuote pystytään myöhemmin toteuttamaan.

Avainsanat: viive, audio

Contents

List of Abbreviations

1 Introduction 1

2 Delay Device 2

2.1 BBD (Bucket Brigade Device) 2
2.2 Bucket Brigade Integrated Chip 3
2.3 Clock Generator Integrated Chip 4

3 Block Diagram Overview 6

3.1 Filters 6
3.1.1 Anti-aliasing Filter 7
3.1.2 Reconstruction Filter 8
3.2 Clock & LFO 8
3.3 Feedback 9

4 Schematic Design 10

4.1 Filter 10
4.2 LFO 12
4.3 Feedback Distortion 14

5 Measurements 15

6 Conclusion 19

References 20

List of Abbreviations

BBD:	Bucket Brigade Device
CMOS:	Complementary metal-oxide-semiconductor
FET:	Field-effect transistor
IC:	Integrated circuit
LFO:	Low frequency oscillator
MOSFET:	Metal-oxide-semiconductor field-effect transistor
Op-amp:	Operational amplifier

1 Introduction

Knif Audio Oy in a Finnish audio technology company which designs and manufactures audio equipment, such as mastering grade equalizers and compressors, amplifiers and one analog synthesizer.

Different types of delay effects play a big role in modern day music production. They are widely used in different situations such as recording, post-production etc. In music production, delays are frequently combined with other effects, such as distortion or reverb.

While analogue delays are less common in modern day music production due to them being less flexible and versatile compared to digital ones, they are still desired for their unique sound characteristics. BBD-delays are often described as being warm and organic sounding. The final product needed to sonically fit the tube based Knifonium synthesizer, so BBD design was the obvious choice.

The goal of this thesis work was to design a unique sounding BBD-delay, which could be implemented in Knif Audio’s own synthesizer.

2 Delay Device

A delay is an audio effect that creates an echo or a repetition of the original sound. It works by repeating the input signal after a specified amount of time, resulting in a series of distinct echoes that follow the original sound.

A delay effect can be used to create a sense of depth and space, as well as to add rhythmic interest or to create a sense of continuity between notes or phrases. It is commonly used on instruments such as guitars, drums, and vocals but can be used in any type on sound.

Delay effects can be created using analog or digital equipment, and can be adjusted to control the delay time, the number of repetitions, and the overall character of the effect. Some delay effects also offer modulation and filtering options, which can add additional texture and movement to the effect.

2.1 BBD (Bucket Brigade Device)

BBD (Bucket-brigade device) is an analog delay line first developed 1969 by F. Sangster and K. Teer in the Philips Research Labs. [1.] It is used in different types of electronic musical devices such as reverb, delay, flanger and chorus effect units.

BBD delay works by using a series of capacitors in a “bucket brigade” configuration. Each capacitor stores the signal and then passes it on to the next capacitor in the series. As the signal moves through the capacitors, it is delayed by a small amount of time. The term bucket brigade refers to firefighting technique where firefighters pass buckets of water to each other along the line.

The amount of delay in a BBD circuit is determined by the number of capacitors in the chip as well as the clock rate at which the capacitors are charged and discharged. The delay time can be varied from few milliseconds to several hundred milliseconds.

2.2 Bucket Brigade Integrated Chip

MN3005 is world's first 4096-stage long BBD-delay. Its delay times can vary from 20.48ms to 204.8ms. Its signal-to-noise ratio is 75dB. [2.] Xvive MN3005 chip is a re-creation of Panasonic's original chip. Figure 1 shows some of the electrical characteristics of the chip.

Operating condition specifications are the following:

- Typical supply voltage (V_{dd}) is -15V
- Operating clock frequency is between 10kHz and 100kHz
- Clock rise and fall times are maximum 500ns
- Signal delay time can be set between 20.48ms and 204.8ms
- S/N is 75dB

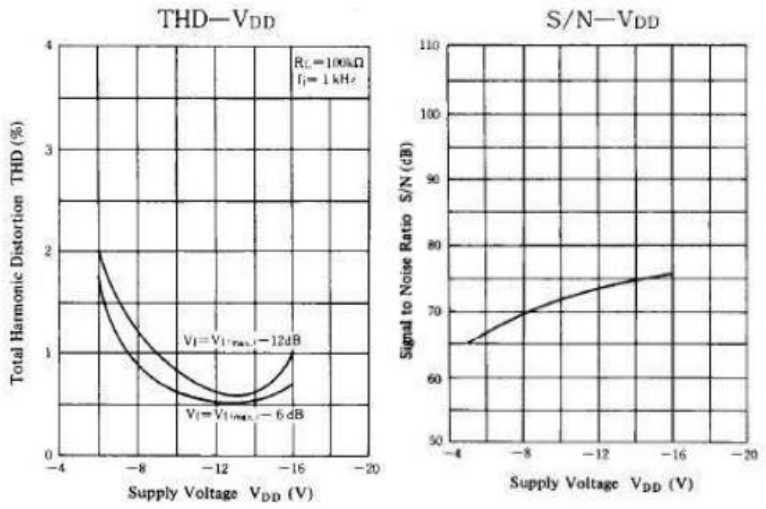

Figure 1: Supply Voltage Characteristics of MN3005 [2].

2.3 Clock Generator Integrated Chip

MN3101 is a CMOS IC designed to generate low impedance clock signal for driving BBD circuits. It outputs two phases, which are opposite to one another. It uses either internal or external oscillation. Maximum clock frequency of the device is limited by load capacitance which causes power dissipation. Figure 2 shows some electrical characteristics of MN3101.

Operating conditions of MN3101 are listed below:

- Typical supply voltage is -15V
- Two phases (1/2 duty cycle) output
- Built-in voltage generator for the BBD

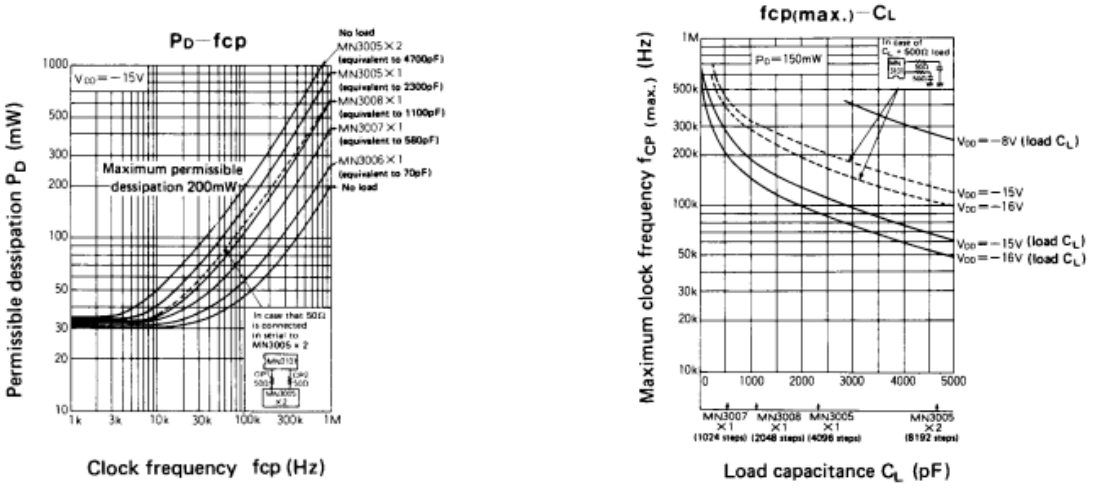

Figure 2: Electrical Characteristics of MN3101 [3].

3 Block Diagram Overview

Designing a block diagram is a big part of figuring out the overall design of the circuit. Figure 3 shows the block diagram design.

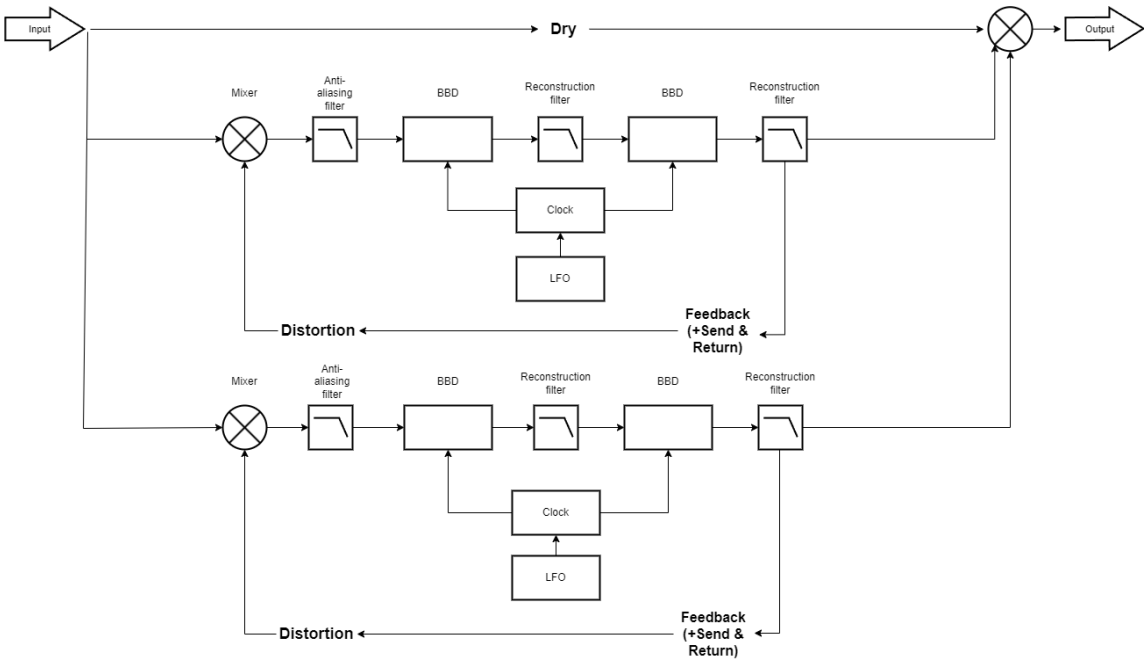

Figure 3: Block Diagram of the Delay.

3.1 Filters

Filters in a BBD delay circuit are used to shape the sound of the delayed signal. BBD delays have a limited frequency response, which means that they may not reproduce all frequencies of the input signal accurately. To compensate for this, filters can be used to modify the frequency content of the delayed signal.

The most common types of filters used in BBD delay circuits are low-pass filters and high-pass filters. A low-pass filter allows low frequencies to pass through while attenuating high frequencies, while a high-pass filter allows high frequencies to pass through while attenuating low frequencies.

In a BBD delay circuit, a low-pass filter can be used to smooth out the delayed signal and remove any harsh or high-frequency content. This can create a warmer, more natural sounding delay effect. On the other hand, a high-pass filter can be used to emphasize the high-frequency content of the delayed signal, creating a more focused and bright sound.

Filters can also be used to create resonant peaks in the frequency spectrum of the delayed signal, which can add additional character and interest to the effect. By adjusting the cut off frequency and resonance of the filter, it is possible to create a wide range of tonal variations in the delayed signal.

3.1.1 Anti-Aliasing Filter

Aliasing is an effect which can occur when an analog signal is converted into a sampled one. Aliasing happens when analog signal misidentified by the digital system. When analogue signals are sampled with an insufficient sampling frequency, it results in unwanted artifacts or distortion in the signal. To avoid aliasing, low-pass filter must be implemented before the sampling stage.

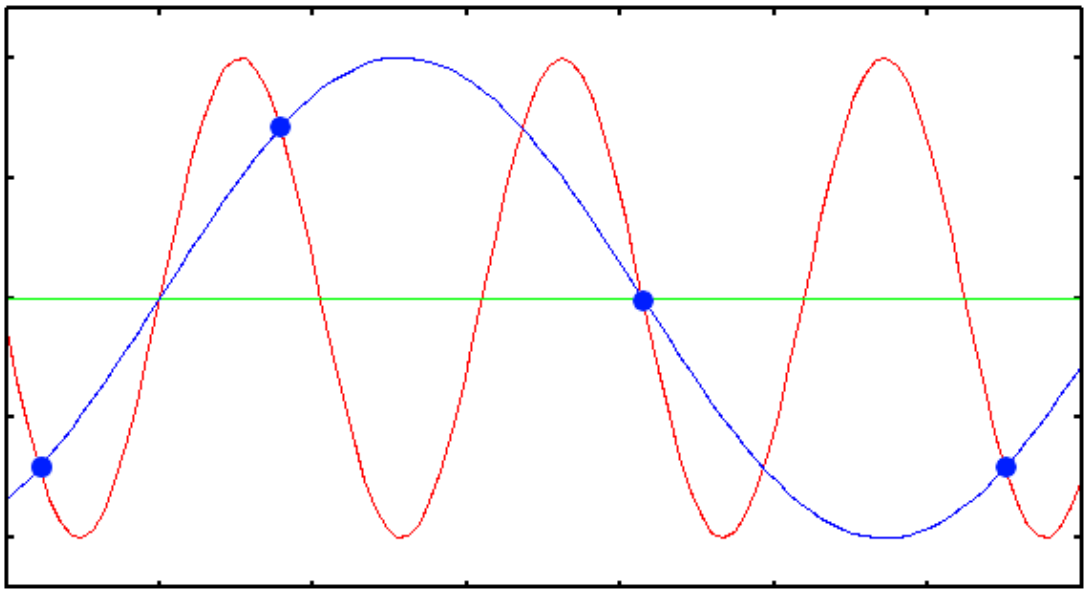

Figure 4: Aliasing Effect Demonstration [4].

As shown in figure 4, the dots are samples whose frequency is that if the sampling rate. When the frequency is not high enough to recreate the original signal (red), it produces wrong signal (blue).

Determining the correct sampling frequency can be done using the Nyquist theorem. The theorem states that to avoid aliasing the sampling frequency has to be at least twice that of the highest frequency contained in the signal [4].

$$f_s \geq 2\, f_c \tag{1}$$

Where f_s is the sampling frequency and f_c is the highest frequency contained in the signal.

3.1.2 Reconstruction Filter

A reconstruction filter is a filter used to reconstruct a continuous-time signal from a discrete-time signal. In the context of analog delays, a reconstruction filter is used to convert a sampled signal back into its continuous-time representation.

The reconstruction filter typically uses a low-pass filter to remove any high-frequency noise or artifacts introduced during the sampling and delay process. The filter allows only the lower frequencies to pass through, which corresponds to the original continuous-time signal.

3.2 Clock & LFO

In a BBD circuit, the clock is used to control the sampling rate of the analog signal that is being delayed. The clock is typically generated by an oscillator circuit or a dedicated clock generator circuit that produces a stable and accurate pulse waveform. MN3005 requires two clock signals in opposite phases.

MN3101 was decided as the best option for clock implementation. Each one can drive up to two MN3005 chips simultaneously. This means that there must be at least two different MN3101 chips driving four MN3005 chips.

In this setup, the LFO generates a low frequency signal that is used to control the timing of the two MN3101 clock ICs. The clock ICs then generate a series of pulses, which can be used to trigger various sound sources or to modulate other parameters in the delay circuit.

3.3 Feedback

Feedback refers to the process of taking the output signal from the BBD and routing it back into the input, creating a loop. This loop causes the delayed signal to be repeated, resulting in a series of echoes that decay over time.

The feedback control on a BBD delay typically adjusts the amount of signal that is routed back into the input, allowing you to control the number of repeats and the decay rate of the echoes. Increasing the feedback will cause the delay to become more self-sustaining, creating a more intense and dense series of echoes, while decreasing the feedback will result in a shorter, more subtle delay effect.

Processing the feedback signal, it is possible to create very unusual effects on the signal. In this design, the feedback goes through a MOSFET distortion circuit. This gives a possibility to create 2nd and 3rd order harmonics to the signal.

4 Schematic Design

Before designing the schematic for this project, many ideas were pondered. While the design was built around the MN3005 chip, all the sections have their own specific purpose within the device.

The filter sections are based around the famous Moog ladder filter, which was developed by Robert Moog in 1966 [5]. This design was chosen for its sonic properties.

The clock IC is a MN3101 CMOS clock generator. One MN3101 is assigned to one BBD chip so it is possible to adjust the time of each BBD. To drive all the clock ICs, LFO is needed to create oscillation. Clock signal is ½ of the oscillation frequency.

4.1 Filter

Figure 5 shows a basic schematic of a Moog ladder filter. Q1 and Q2 is the driving stage of the filter. Input (audio signal) is applied to the base of Q1 transistor through a coupling capacitor and feedback is applied to the base of Q2. The cut off frequency of the filter is defined by the current $I_{bias.}$ Changes in I_{bias} causes the bias current of all the transistor to change. The differential output voltage is taken from the transistor pair Q9 and Q10. The filtering stage of the circuit is between the driver stage and the output stage. Each stage consists of a pair of transistors with a capacitor between the emitters. The chain of resistors is used to bias the voltage. [6.]

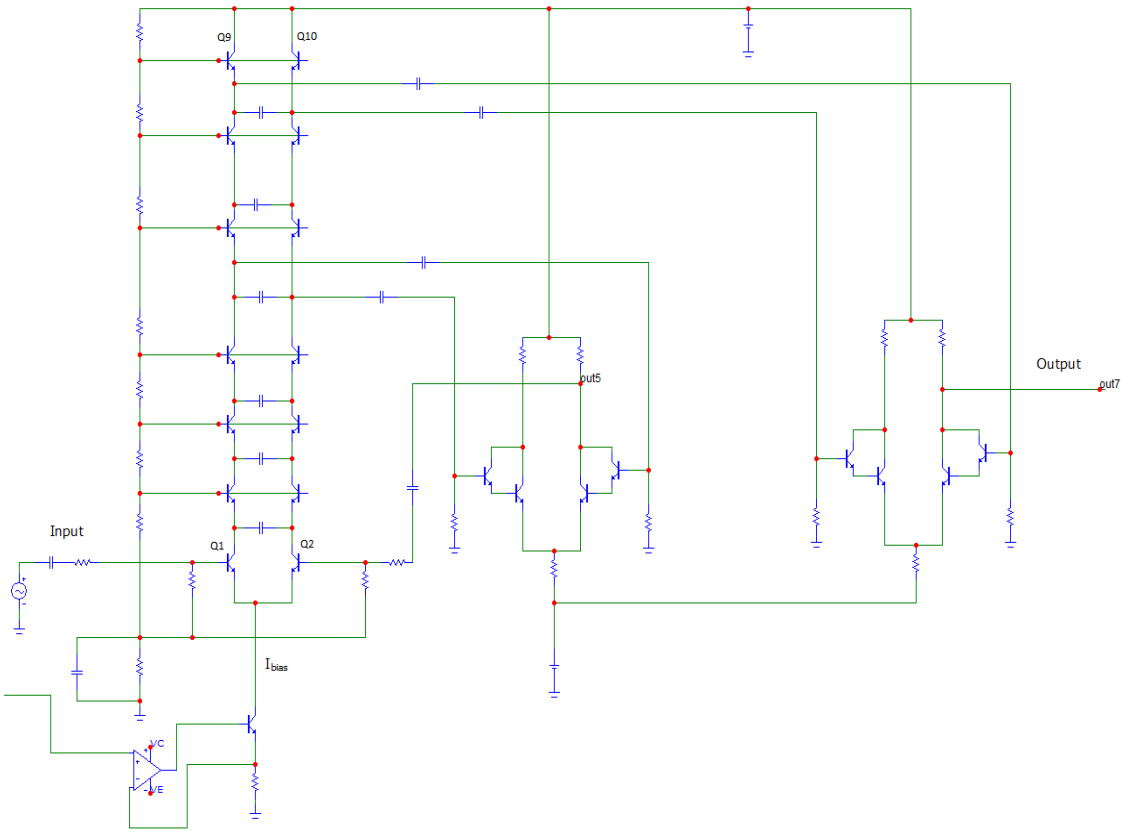

Figure 5: Schematic of the Transistor Ladder Filter [6].

The transistors used in the design are BC550 low noise NPN transistors. Exact cut off point of the reconstruction filter is determined after listening tests.

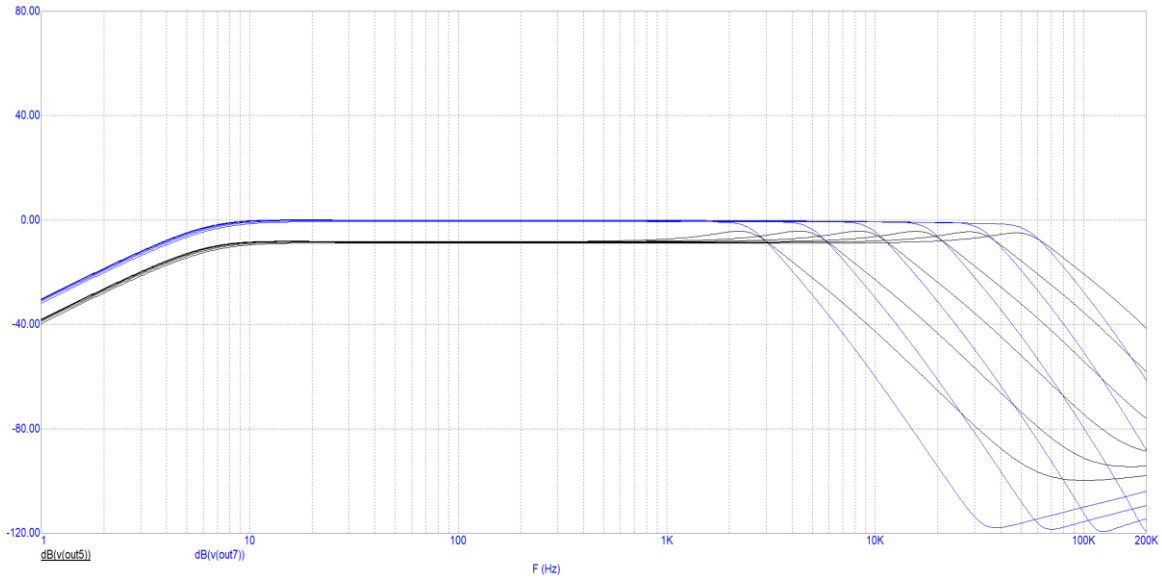

Figure 6: Plots From AC-analysis.

Simulation of the schematic is shown in figure 6. The simulation was stepped at I_f values of 0.3mA, 0.6mA, 1.2mA, 2.4mA and 4.8mA.

The black curve in figure 6 is taken from the lower ladder. To have the filter cut off be steeper, the ladder count had to be increased. The blue curve in figure 6 is taken from the output and represents the steeper roll-off curve, which is nearly 6th order.

4.2 LFO

Driving the MN3101 clock generators requires external oscillation. This oscillator creates a sawtooth waveform as seen in figure 7.

Figure 8 shows the schematic of the circuit. There is an exponential converter before the oscillator input op-amp. It is current driven so no need for current to voltage -conversion.

The op-amp charges the 1nF capacitor. After that comes comparator which drives a switch circuit that drains the capacitor when voltage passes certain value. At output there is an op-amp that inverts the output voltage for the clock circuit.

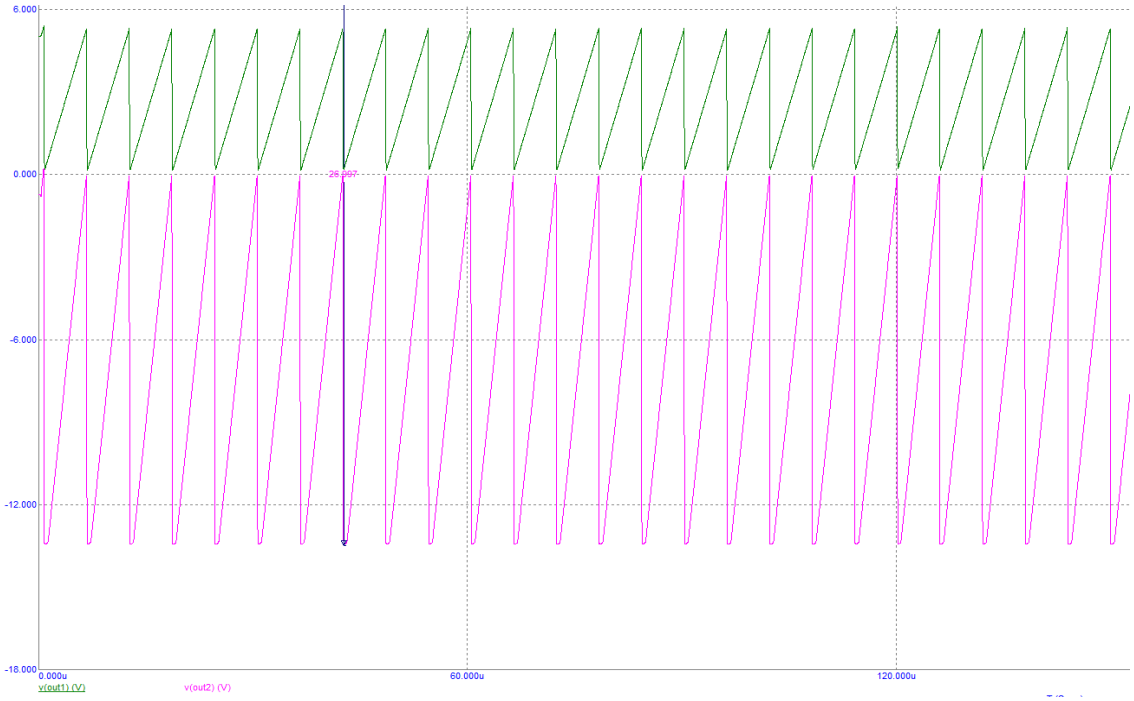

Figure 7: Oscillator Output Analysis.

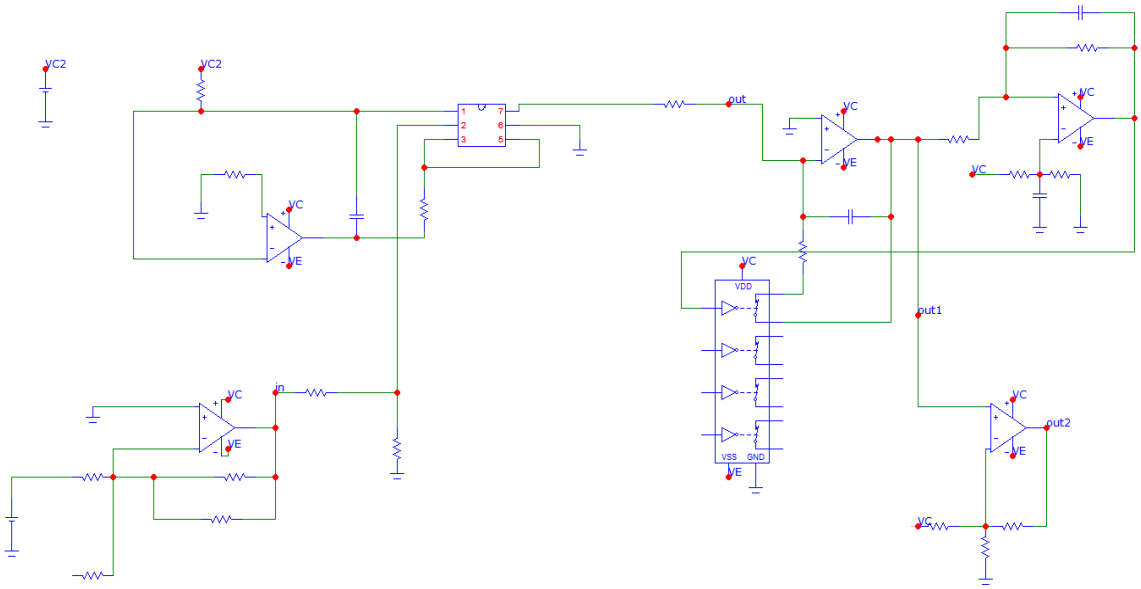

Figure 8: Oscillator Circuit Schematic.

4.3 Feedback Distortion

The distortion stage in the feedback signal consists of FET-transistors. The switch creates two different signal paths. The asymmetrical path is switched to ground, thus creating 2nd order harmonics. Using the switch will open the ground and making it the circuit symmetrical. This enables 3rd order harmonics driven into the signal. Figure 9 shows the schematic design which uses LND150 MOSFETs. R82 is a 10k potentiometer which controls the distortion level.

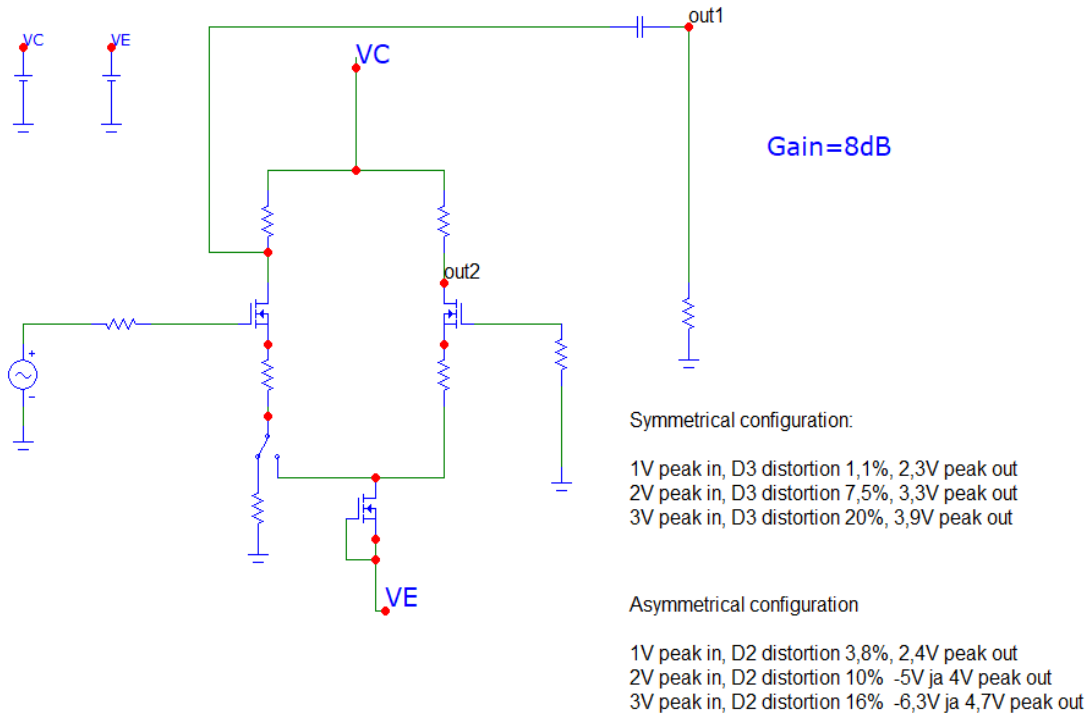

Figure 9: Distortion Circuit Schematic.

5 Measurements

A prototype of the ladder filter was built on a breadboard as seen in figure 10.

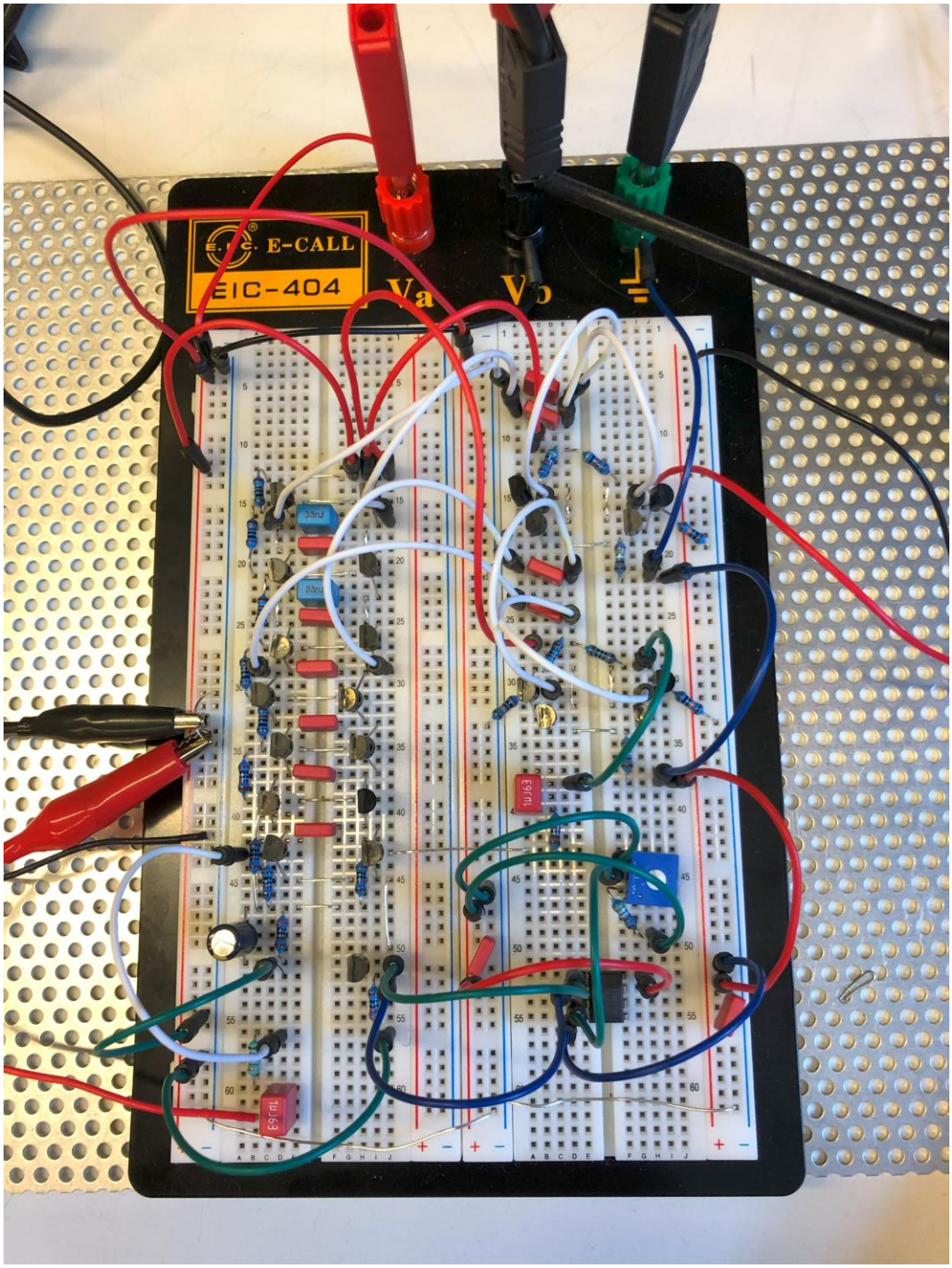

Figure 10: Prototype Ladder Filter.

Initial measurements were done with V_d=10V, V_e=-10 supply voltages. Noise levels were at -70dBu, mostly white noise. At 5kHz 2V peak to peak the distortion was more 3rd and less 2nd harmonic. Distortion in figure 11 was measured with oscilloscope at 4kHz with 2V peak to peak.

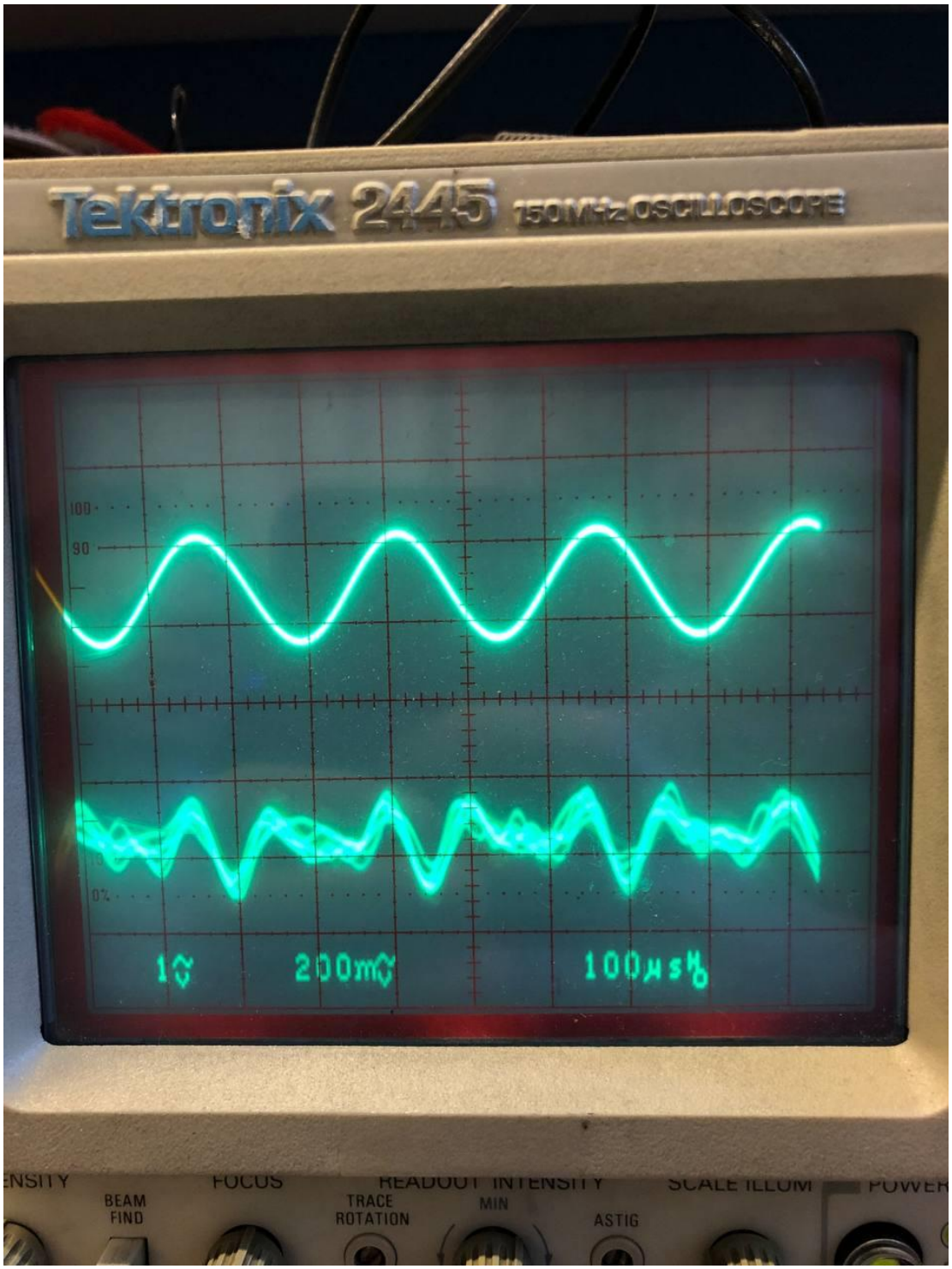

Figure 11: -6dB Cut Off Point at 4kHz.

Following sweep measurements in figure 12 were done with FuzzMeasure. DA/AD conversion was done with Lynx Hilo. They were done to measure the frequency response and distortion of the filter.

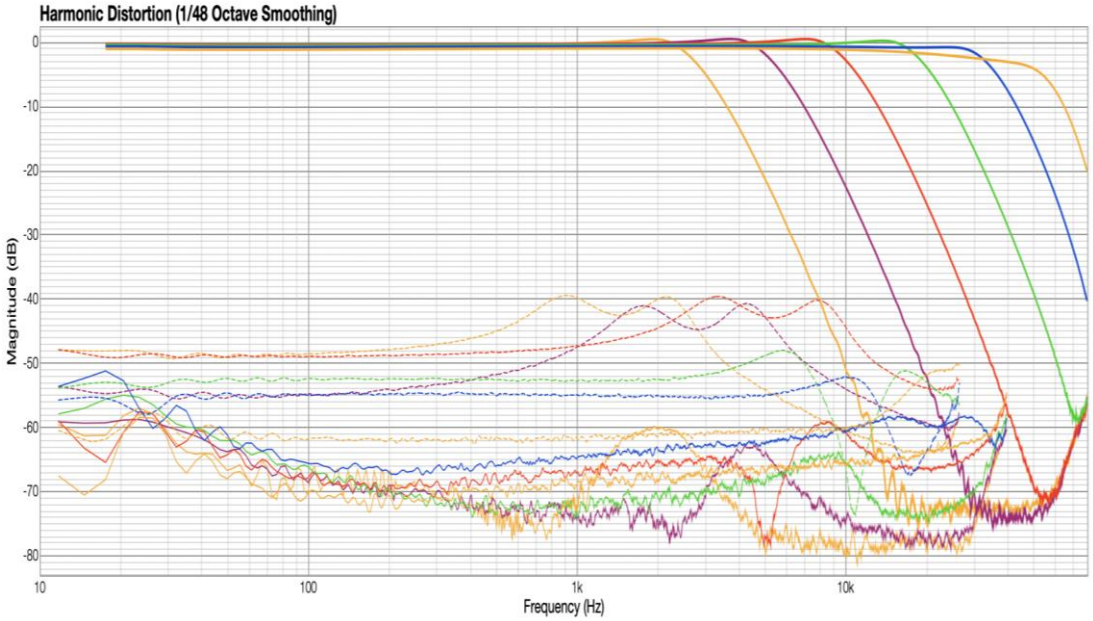

Figure 12: Sine Sweep Measurements Show a Small Resonance Before the Cut Off Point.

- Yellow line: 0dBu in at 0.22mA the cut off happens at 3.1kHz
- Purple line: 0dBu in at 0.45mA the cut off happens at 6kHz
- Red line: 0dBu in at 0.90mA the cut off happens at 10.3kHz
- Green line: 0dBu in at 1.8mA the cut off happens at 11.2kHz
- Blue line: 0dBu in at 3.6mA the cut off happens at 12.7kHz
- Second yellow line: 0dBu in at 7.2mA the cut off happens at 14.6kHz

The harmonic distortion levels are shown at the bottom. Bottom lines represent 2nd harmonic and dashed line 3rd harmonic distortion levels.

6 Conclusion

Aim of the project was to design a commercial BBD-delay product for Knif Audio. The design consists of complete schematic designs of every section needed to build a working device.

Final product could not be built because the clock IC was lost when it was in transit to Finland and therefore could not be here in time. The frequency generator could not drive the BBD chip, so it could not be tested properly.

Although the finished device was not built, all the simulations were done with Microcap and worked perfectly.

A prototype of the ladder filter was however built and it was successful. The measured behaviour of the filter matched the simulations. Still, it is crucially important to test and tune the device after its been built to understand its sonic qualities.

The design of the product will undergo some changes and improvements before it is applied to the synthesizer. Still, the thesis is considered a success, because it laid a foundation for the final product to emerge.

References

1. Wikipedia. Bucket-brigade device [Internet]. 2022 [Cited 2023 March 2]. Available here: https://en.wikipedia.org/wiki/Bucket-brigade_device

2. Xvive MN3005 Datasheet [Internet]. [Cited 2023 March 2]. Available here: https://xvive.com/audio/wp-content/uploads/sites/2/2021/11/Xvive_MN3005_BBD_DATASHEET.pdf

3. MN3101 Clock Generator Datasheet [Internet]. [Cited 2023 March 15]. Available here: MN3101 datasheet(1/4 Pages) PANASONIC | CLOCK GENERATOR/DRIVER CMOS LSI FOR BBD (alldatasheet.com)

4. Aliasing [Internet]. [Cited 2023 March 15]. Available here: https://support.ircam.fr/docs/AudioSculpt/3.0/co/Aliasing.html

5. The Classic Sound of The Moog Ladder Filter [Internet]. [Cited 2023 March 15]. Available here: https://www.uaudio.com/blog/moog-ladder-filter/

6. Sam Gallagher. Analyzing The Moog Filter [Internet]. 2019 [Cited 2023 April 5]. Available here: https://www.allaboutcircuits.com/technical-articles/analyzing-the-moog-filter