Tampere University of Applied Sciences

Cinematic music creation in Dolby Atmos

Producing and mixing contemporary cinematic music in immersive audio.

Sami Juha Laine

BACHELOR'S THESIS
April 2024

Degree Programme in Media & Arts, Music Production

ABSTRACT

Tampereen ammattikorkeakoulu
Tampere University of Applied Sciences
Degree Programme in Media & Arts
Music Production

SAMI JUHA LAINE:
Cinematic Music Creation in Dolby Atmos

Bachelor's thesis 49 pages, appendices 6 pages
April 2024

Immersive audio has increased in popularity over the past decade with Dolby pushing it to the mainstream consumer market in the form of Dolby Atmos, not only for professional and cinema applications. As this has made creating immersive audio content available to more producers and engineers, it is beneficial to assess if it is worthwhile to work in Atmos and what impact it has on the average consumer.

The goal of this thesis was to create an album of modern cinematic music in Dolby Atmos and while doing so, find workflows and approaches that work well and compliment this style of music. Additionally, it was researched what the average consumer thinks about Atmos music compared to traditional stereo.

The thesis examines the brief history and explanation of surround and immersive audio including Dolby Atmos, workflow methods, Atmos for film versus Atmos for music, current challenges faced, and why it works well for cinematic music. To validate Dolby Atmos as a preferred format for cinematic music creation and consumption, a case-study was conducted in the form of a practical project.

It was concluded that Atmos is a viable alternative for the consumption of cinematic and orchestral music. This is mainly due to the immersive nature of Atmos. The engineer is no longer limited to only 2 channels of audio but can place elements where one pleases in the 180-degree half-sphere, leading to less processing on individual sounds which in turn leads to a more natural and encompassing result. However, to fully experience immersive content as it was intended the listener needs at least a 5.1.2 speaker configuration. This is due to the Binaural fold-down for headphones being in constant development and is still not yet a fully viable alternative to an immersive speaker configuration.

Key words: Dolby Atmos, immersive audio, cinematic music, binaural

CONTENTS

1 INTRODUCTION 7
2 INTRODUCTION OF INTERVIEWEES 9
2.1 Steven Maes 9
2.2 Mikko Raita 9
3 Multichannel Audio 11
3.1 What is multichannel audio and how did it originate? 11
3.1.1 Channel Based Audio 16
3.1.2 Object Based Audio in Dolby Atmos 17
3.2 Why Use Dolby Atmos? 19
3.2.1 Scalability 20
3.2.2 End-point Rendering 20
3.2.3 Dolby Atmos for Film and Television 21
3.2.4 Dolby Atmos for Music 22
4 DOLBY ATMOS WORKFLOW FOR CINEMATIC MUSIC 24
4.1 Creating music for Atmos 24
4.1.1 Arrangement approaches for orchestral instruments. 26
4.1.2 Instrument placement in 3d space. 28
4.1.3 Creative use of object automation 29
4.2 Mixing in Atmos 31
4.2.1 The Dolby Atmos renderers 35
4.2.2 Approaches to spatial reverbs and delays 38
5 CHALLENGES FACED WITH ATMOS TODAY 41
5.1 Mixing environment 41
5.1.1 Consumer Listening configurations for Dolby Atmos 42
5.1.2 Dolby Atmos in vehicles 43
5.2 Software Support 43
5.2.1 Digital Audio Workstations 43
5.2.2 Consumer applications 44
6 DISCUSSION 45
REFERENCES 47
APPENDICES 50
Appendix 1. Interview, Steven Maes. (1/2) 50
Appendix 1. Interview, Steven Maes. (2/2) 51
Appendix 2. Interview, Mikko Raita. (1/4) 52
Appendix 2. Interview, Mikko Raita. (2/4) 53
Appendix 2. Interview, Mikko Raita. (3/4) 54

Appendix 2. Interview, Mikko Raita. (4/4)..... 55

ABBREVIATIONS AND TERMS

DAR	Dolby Atmos Renderer.
DAW	Digital Audio Workstation.
PT	Pro Tools.
S1	Studio One.
C13	Cubase 13.
VST	Virtual Studio Technology.
MIDI	Musical Instrument Digital Interface.
EQ	Equalizer.
VI	Virtual Instrument.
RMU	Rendering and Mastering Unit.
MADI	Multichannel Audio Digital Interface.
LTC	Linear Timecode.
DANTE	Multichannel AoIP-format.
AoIP	Audio over Internet Protocol.
UI	User Interface.
RTA	Realtime Analyzer.
L	Left.
C	Center.
R	Right.
LFE	Low Frequency Effects.
Lss	Left Side Surround.
Rss	Right Side Surround.
Lrs	Left Rear Surround.
Rrs	Right Rear Surround.
Ltf	Left Top Front.
Rtf	Right Top Front.
Ltb	Left Top Back.
Rtb	Right Top Back.
Epicore	Modern dramatized orchestral music, example playlist link in references (Spotify 2024).
HRTF	Head Related Transfer Function.
SMPTE	Society of Motion Picture and Television Engineers.
OAMD	Object Audio Metadata.

ADM BWF	Audio Definition Model Broadcast Wave Format.
Ear candy	Small detail in music that adds depth and interest.
Front Wall	The front channels of an Atmos setup (L, C, R, Tfl, Tfr).
Avid Control	Daw control application for iOS and Android by Avid.
Binaural	The way human ears pick up audio, means “two ears”.
Metadata	Accompanying information for a file.
Immersive	Seeming to surround the audience or listener so that they feel completely involved in something.
LUFS	Loudness Unit relative to Full Scale.
Super mono/big mono	When identical or very similar signals are played back through all speakers in a surround system at the same time.

1 INTRODUCTION

In the world of musical composition, orchestral arrangements stand as timeless conduits of emotional expressiveness. In the modern era however, the introduction of Dolby Atmos for Music has presented a shift in the spatial and immersive aspects of music. This thesis ventures into the crossing of contemporary orchestral brilliance and cutting-edge object-based audio technology. Exploring the challenges, creative opportunities, and technical intricacies. This study tries to uncover the transformative impact of Dolby Atmos on the creation and presentation of modern orchestral music.

Orchestral and cinematic music has been a large part of my life for a long time. I have written, mixed and mastered countless pieces always struggling with the same core problem, space. In the world of modern cinematic compositions, there are many more elements to a piece than just the traditional western classical instruments. This leads to the mix becoming very dense in the normal stereo field, which causes a lack in definition and separation between all the instruments. Dolby Atmos offers a solution to this by allowing the placement of elements all around the listener.

Before starting my journey into working on modern cinematic music or “Epicore” in immersive audio, I tried to find literature, or any guidance related to the topic without success. Most literature concerning Dolby Atmos is often theoretically complex and delves into broad sciences behind Object-based audio and immersive sound. This generally more technical approach can prove difficult to apply in practice. This thesis is meant to serve as a guide for anyone working in the niche of Epicore and wanting to expand their mixing and production into immersive audio focusing on Dolby Atmos for Music, while avoiding the deeper theoretical aspects behind it all.

The practical part of this thesis was done as two parts during 2023 and the spring of 2024. I co-wrote, mixed, and produced an 8-track album of Epicore in Dolby Atmos as a case study and organized a listening session where the average consumer and music producers not familiar with immersive audio could compare Atmos mixes against traditional stereo mixes, giving their thoughts and opinions on both. I also attended seminars and webinars held by Dolby about mixing and creating music in Dolby Atmos along with interviewing industry professionals.

"You must start from the beginning. Your music, recording, and mixing process all must be thought out from the start to end up in immersive. Going from immersive to stereo is quite easy, but the other way around is always troublesome and usually artistically unsatisfying." (Maes 2024.)

2 INTRODUCTION OF INTERVIEWEES

2.1 Steven Maes

For over two decades, Steven Maes has been a versatile sound engineer, utilizing innovative techniques ranging from lamp microphones to Ambisonic audio and 360 video. With a deep-rooted passion for classical music, he has directed TV programs, produced hundreds of recordings, and mastered CDs for a broad spectrum of artists, including Adamo and Lost Frequencies. (Maes 2024.)

His work has received accolades from prestigious publications like BBC Music Magazine, Diapason, and Gramophone. Notably, his DVD "392" on Pieter Wispelwey's interpretation of Bach's Cello Suites garnered widespread praise, and his rendition of Debussy's "La Mer" with the Brussels Philharmonic was hailed by Classica as a top classical reference. (Maes 2024.)

Steven's recent collaborations with the London Philharmonic and London Symphony Orchestra have earned him two Echo Classic awards in Germany. He also contributes to the academic field, teaching studio technique and overseeing thesis projects at PXL University College in Hasselt, Belgium. (Maes 2024.)

2.2 Mikko Raita

Mikko Raita, born in 1979, swiftly made his mark in the Finnish music industry from the early 2000s, excelling in mixing, recording, and producing across various genres for premier artists and labels, accumulating nearly 300 projects. He's equally adept in film and TV music, increasingly leaning into this domain with significant local and international projects. (Studio Kekkonen n.d.)

In 2018, Mikko broke new ground in Finland by pioneering Dolby Atmos music mixing. His expertise extends to teaching at prestigious institutions like the Sibelius Academy and Aalto University, sharing his knowledge in music technology and sound design. Renowned for his meticulous craftsmanship, Mikko's work has

garnered numerous accolades, including Finland's Pappa-Pysti award and nominations for the Emma and Jussi Awards, underscoring his impact across music and film sound industries. (Studio Kekkonen n.d.)

His credits include but are not limited to: Aki Rissanen, Apocalyptica, Frigg, Hector, Ismo Alanko, Mimmit, Oddarrang, Tuomo, Verneri Pohjola, Von Hertzen Brothers. (Studio Kekkonen n.d.)

3 Multichannel Audio

Before continuing with the creative and mixing process, I will go through what sets multichannel formats like Dolby Atmos apart from traditional two and single channel formats and explain some simple but necessary technicalities about working in multichannel and immersive audio formats. Lastly there will be a brief run through of how multichannel audio came to be the norm in film and music.

3.1 What is multichannel audio and how did it originate?

Multichannel audio refers to the use of multiple audio channels or tracks to create a more immersive and spatial audio experience. Instead of a traditional stereo 2.0 setup with just two channels (left and right), multichannel audio systems utilize more channels, typically in the form of a surround sound configuration. The naming convention for these are 3 numbers separated by points and go as follows:

The first number denominates the amount of traditional surround speakers, for example Left, Right, Center, Left side surround and Right side surround. The second number denominates how many LFE channels are in the system, typically it is one or two. Lastly, the third number denominates how many height channels are in the system. Height channels are only used in immersive audio formats like Dolby Atmos, not in traditional surround.

The most common multichannel audio setups start from 5.1 (Picture 1). Meaning five surround speakers (L, R, C, Lss, Rss) and one LFE subwoofer. This can then be expanded to more and more advanced configurations like for example 7.1.4 (Picture 2), which is considered an immersive audio configuration. This is because the ".4" means there are four ceiling mounted top or "height" channels, giving the listener a more immersive experience due to sound coming from above. (Table 1). The more speakers in the system, the more accurate the perceived spatialisation of audio objects will be according to mixing engineer Edgar Rothermich. This in turn improves the immersion for the listener by them being able to accurately pinpoint where sound is coming from due to HRTF. (Rothermich 2021, 74-75.)

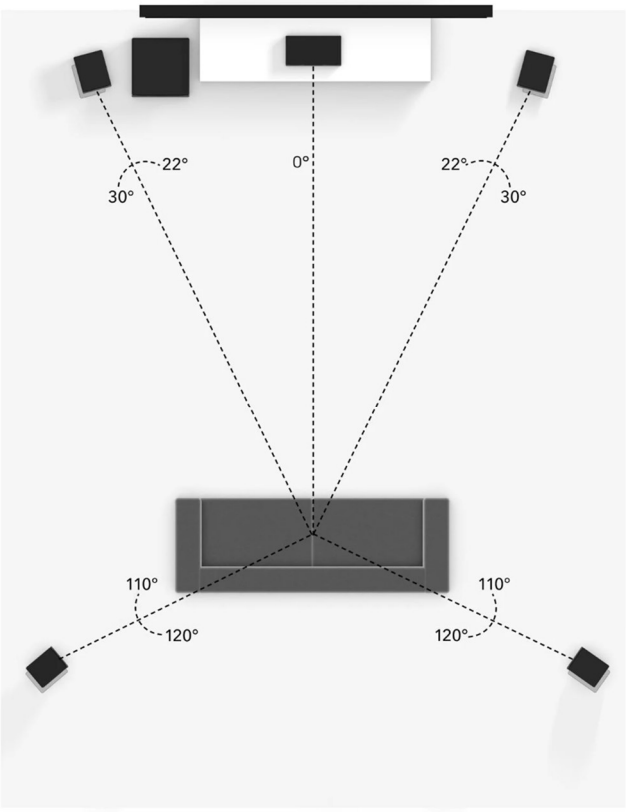

PICTURE 1. 5.1 Surround Speaker Placement (Dolby n.d).

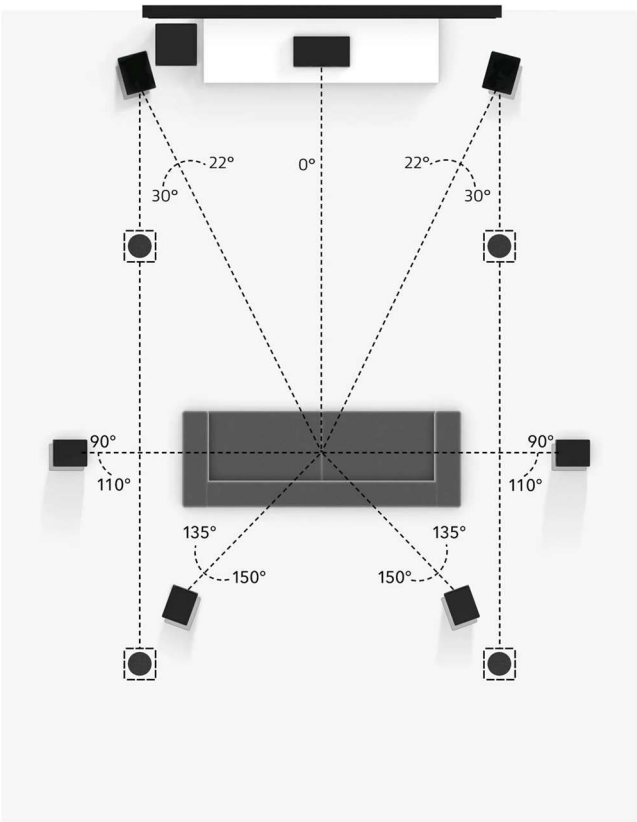

PICTURE 2. 7.1.4 Immersive Speaker Placement (Dolby n.d).

The first commercially successful multichannel sound formats were developed in the early 1950s for cinema and film use, with some successes as early as the 1940's with Disney's film "Fantasia", according to Communications Manager Joseph Hull (1999). Bell Laboratories' famous experiments with stereo sound in the 1930s used three channels. Cinema stereo in the 1950s used no less than four channels and could go up to as many as seven.

Yet when film stereo made it into the average consumers' homes in the late 1950s, it was limited to only two channels (left and right) due to the then-prevalent LP phonograph record which could not accommodate any more channels. (Hull 1999.)

As home stereo gained popularity, manufacturers sought to expand their market, leading to the development of the ill-fated quadraphonic or "quad" format in the early 1970s. This format required two extra speakers in the rear corners of the room to reproduce additional channels from specially encoded sources. (Picture 3). Due to the limitation of existing two-channel stereo media, various encoding schemes were developed, mostly based on matrixing techniques to incorporate extra channels into the standard two channels. According to Hull (1999), special techniques like recording the rear channels with differing relative phase to the front channels allowed them to be folded down into two channels, thus, in theory allowing the playback device to decode the 2 channels into 4 channel quadrophonic audio. The quad format however was a commercial failure due to the expense, lack of playback hardware and competing formats. (Hull 1999.)

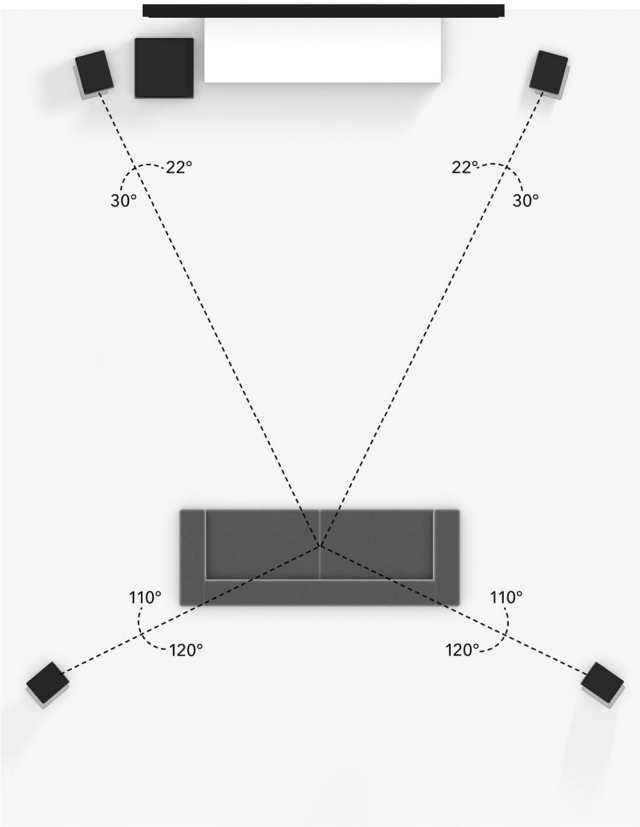

PICTURE 3. 4.1 Quad Speaker Placement (Dolby n.d).

In the mid to late 1970s Dolby Laboratories introduced a new sound format called Dolby Stereo. This, unlike previous formats used optical soundtrack technology on the film reels. To enable backwards compatibility in older cinemas, it was important to fit the optical track in the same space on the print as occupied by the traditional mono track used since the 1930s. This new format used a similar four channel configuration as quad, utilizing matrixing to fold down four channels into two. The big difference being that Dolby Stereo was configured in the cinema stereo norm, L, C, R, and mono surround. (Hull 1999, Dolby 2020.)

In the late 1980s, Dolby Laboratories responded to the film industry's interest in digital audio technology. To maintain compatibility once again with existing cinemas, a new Dolby Digital optical track was introduced between the sprocket holes, featuring a 5.1 configuration with six discrete sound channels as shown in picture 1. This setup included left, center, right, left surround, and right surround channels, along with a ".1" channel specifically for low-frequency effects (LFE). Debuting in 1992, Dolby Digital was the leading multichannel digital film sound format in both film releases and equipped cinemas. (Hull 1999.)

The mid to late 90's was the golden age of Dolby Digital 5.1 home cinemas utilizing satellite speakers for the surrounds and an LCR front channel layout with a dedicate LFE subwoofer (Hull et al, 1999.)

This first commercial immersive audio format, "Auro 3D" is released in 2005 and is followed by MPEG-H, DTS X, Sony 360 Reality Audio and lastly Dolby Atmos in 2012 with the debut of Disney/Pixar's Brave. Atmos and other immersive formats were new object-based audio technologies with a completely different approach compared to the by then traditional surround formats. These new platforms introduced two important concepts to modern sound: audio objects and ceiling mounted height speakers. (Dolby 2020, Rothermich 2021, 15.)

In 2019, Dolby launched Atmos for music in partnership with the streaming platforms Amazon music and Tidal, with Apple music announcing support in 2021 (Rothermich 2021, 15).

Nowadays multichannel audio is widely used in films, music streaming, TV broadcasts, games, cars, and even live concerts. Commonly movie theatres will feature a Dolby Atmos configuration, or an array based 5.1 or 7.1 system, meaning that multiple speakers play the same audio channel acting as an array of sound sources to cover more listener area. Even most TV broadcasts are in at least 5.1, with some sports events being broadcast in 7.1.4 Dolby Atmos. (Rothermich 2021, 24.)

To ensure that multichannel audio is played back correctly across multiple platforms, a certain channel order must be used. In this thesis I will be focusing on the SMPTE surround channel order, since that is what the Dolby Atmos Renderer outputs and what Dolby recommends using. The SMPTE Channel order for 7.1.4 is as follows: L, R, C, LFE, Lss, Rss, Lrs, Rrs, Lft, Rtf, Ltr and Rtr. (Dolby N.d.) This same order applies to lower channel counts as well, for example 5.1 or 7.1.

Channel conf:	Use case:	Pros/cons:
2.0	Normal 2 speaker stereo system	Affordable, lacks spatialisation.
Binaural 2.0	Headphones	Cheap and everyone has access but binaural spatialisation does not sound convincing without personalised HRTF filters.
5.1	Typical home theatre systems	Outdated channel-based surround system, only has horizontal spatialisation but is widely implemented.
7.1	Most older cinemas and high-end home theatres	Same as 5.1 but more surround speakers, leads to better localisation of sound but at a higher cost.
5.1.2	Modern Atmos soundbar systems	Like 5.1 but adds 2 height speakers for vertical spatialisation and is Object based. Widely considered the “minimum” for Dolby Atmos playback.
7.1.4 and up	Atmos cinemas, Mixing rooms, modern high-end home theatres	The standard speaker configuration for Dolby Atmos. Good localisation but high speaker count means it gets quite expensive.

TABLE 1. Channel configurations and their usage (Laine 2024).

3.1.1 Channel Based Audio

This can be considered the default audio type, dating back all the way to when Edisons tinfoil cylinder sprung to life in 1877 (Mix online 2006). In channel-based formats like mono, stereo, 5.1, 7.1, and all the way up to large format configurations like 22.2 used in cinemas, each channel directly feeds the audio signal to a speaker without modification as shown in picture 4. This means the speaker configuration is “baked in” to the audio file. (Ebu adm n.d.)

While metadata was not initially necessary for channel-based audio, labeling each channel with an identifier has proven useful in ensuring channels get an accurate speaker allocation. In a mixing mindset, channel-based audio would be mixed to the desired output channel (Sound particles 2022). In certain scenarios, for example online streaming, channel-based audio can be processed and converted to different configurations, such as downmixing from 5.1 to stereo. (Ebu adm n.d.) Dolby Atmos also has a channel-based aspect to it, called the “Bed”. A standard bed has a 7.1.2 configuration and is mostly used for stationary or pre-mixed channel-based content along with reverbs.

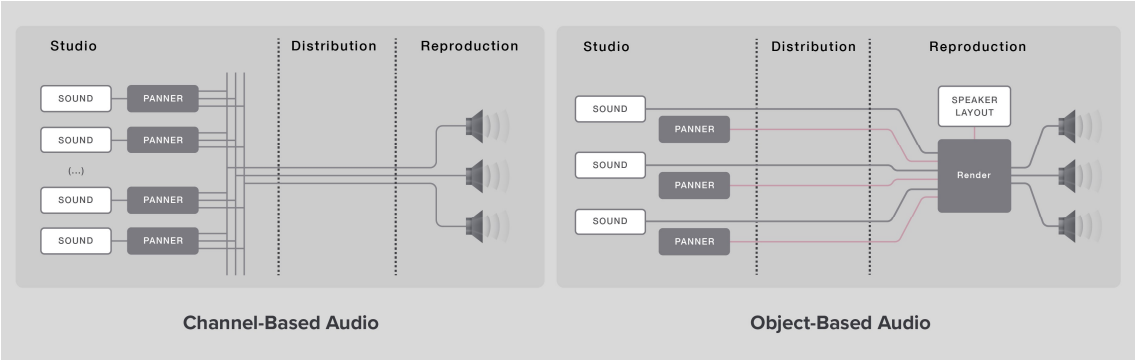

PICTURE 4. Channel-based audio versus object-based audio (Sound particles 2022).

3.1.2 Object Based Audio in Dolby Atmos

Unlike channel-based audio where tracks are mixed to specific output channels, in object-based mixing tracks are assigned to audio objects. These objects are essentially a combination of XYZ coordinate metadata and a waveform. The object panner (Picture 5, picture 6) on an object track sends this coordinate information along with the audio to the Dolby Atmos renderer, which interprets the metadata as a location in 3-dimensional space. It then renders out the OAMD + waveform into a channel based physical location according to the speaker configuration used. When the mix is bounced out as an ADM BWF-file, the coordinate data for each object is stored in the file. A Dolby Atmos playback device then uses the coordinate information to decide which speakers the audio from the objects should be played back on based on how many speakers the system has (Picture 4). This process is called “Rendering”. (Rothermich 2021, 19.)

PICTURE 5. Cubase VST Multi Panner Object Panner (Steinberg 2024).

PICTURE 6. Dolby Atmos Music Panner (Dolby n.d).

The panner as shown in picture 5 and 6 is used to place objects in 3-dimensional space. Objects are always one mono audio source, so to create a stereo (L/R) sound field, two objects are needed. The panner allows the objects to be moved around the X, Y and Z axis but also to be rotated along an axis, which is very useful for circular movement around the listener. The objects perceived size can also be adjusted to create a more immersive experience. Lastly, objects can be snapped to the nearest active speaker much like in channel-based formats. (Steinberg n.d.) This is to achieve better translation between speaker configurations and to create a neater instrument separation in a denser mix.

3.2 Why Use Dolby Atmos?

Especially in Epicore and other genres where the mixdown can get extremely dense, the producer is afforded greater flexibility in audio spatialization, overcoming the previous constraints of a traditional two channel or even a surround audio system. The capability of placing audio objects anywhere within the 180-degree hemispherical domain allows for a reduction in the necessity for extensive processing on individual sound elements, thereby resulting in a more natural and immersive product.

As of the writing of this thesis, Dolby Atmos has the lowest barrier of entry among immersive audio formats with companies like Fiedler Audio offering their free although limited software, Dolby Atmos Composer Essential. This can be combined with a daw like Reaper to allow producers and engineers to get into creating in Atmos for very little money or free. (Fiedler Audio 2024.)

Numerous digital audio workstations also have native although in some cases limited compatibility with Dolby Atmos, all featuring an integrated Dolby Atmos renderer. Among these DAWs are Pro Tools, Nuendo/Cubase, Logic Pro, and Studio One. (Dolby 2023.) For the other daws, Dolby Atmos Composer can be used on daws with no native support for Atmos (for example Ableton Live) by placing the panner plugin on each object channel, much like the Dolby Music Panner plugin (Fiedler Audio 2024).

3.2.1 Scalability

Dolby Atmos' object-based approach offers scalability by accommodating different speaker configurations, from basic stereo setups and headphones to elaborate multi-channel systems used in cinemas. As a result, Dolby Atmos can adapt to the available hardware, ensuring an immersive experience regardless of the playback environment. (Dolby n.d.)

As shown in picture 7, Dolby Atmos uses object-based rendering from one master file, which dynamically adjusts the audio based on the playback system's capabilities. This ensures that even in scenarios where a listener has limited speaker channels or a specific acoustic space, the system can optimize the placement of audio objects and provide an immersive experience while making the most of the available resources. (Dolby n.d.)

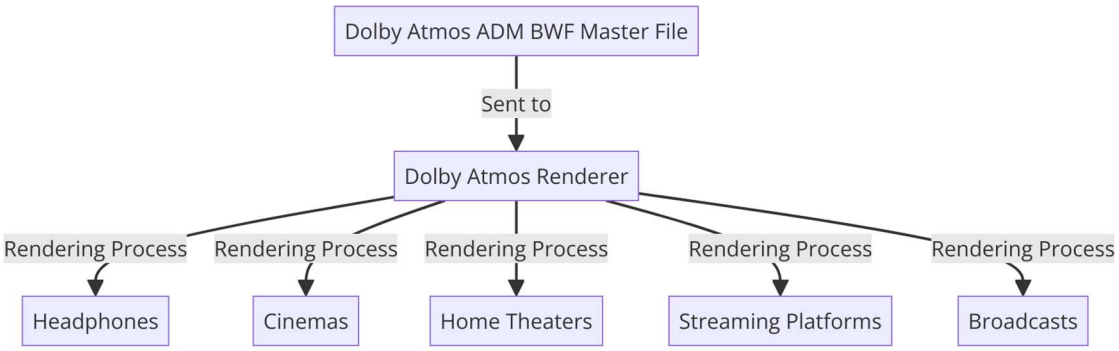

PICTURE 7. Dolby Atmos rendering scalability (Laine 2024).

3.2.2 End-point Rendering.

As opposed to the traditional way of playing back channel-based audio where a stereo or surround mix has been created by a mixing engineer, endpoint rendered formats like Dolby Atmos rely on the playback system (for example your home theatre or a cinema sound system) to create the final mix for the listener using a render engine. It creates the playback mix from the 10 bed channels (if using one 7.1.2 bed) and 118 audio objects with their associated spatial metadata contained within the ADM BWF Masterfile. This is then upmixed to higher channel counts

or folded down to lower channel counts by the renderer depending on how many speakers the system has. (Picture 7, Dolby n.d.)

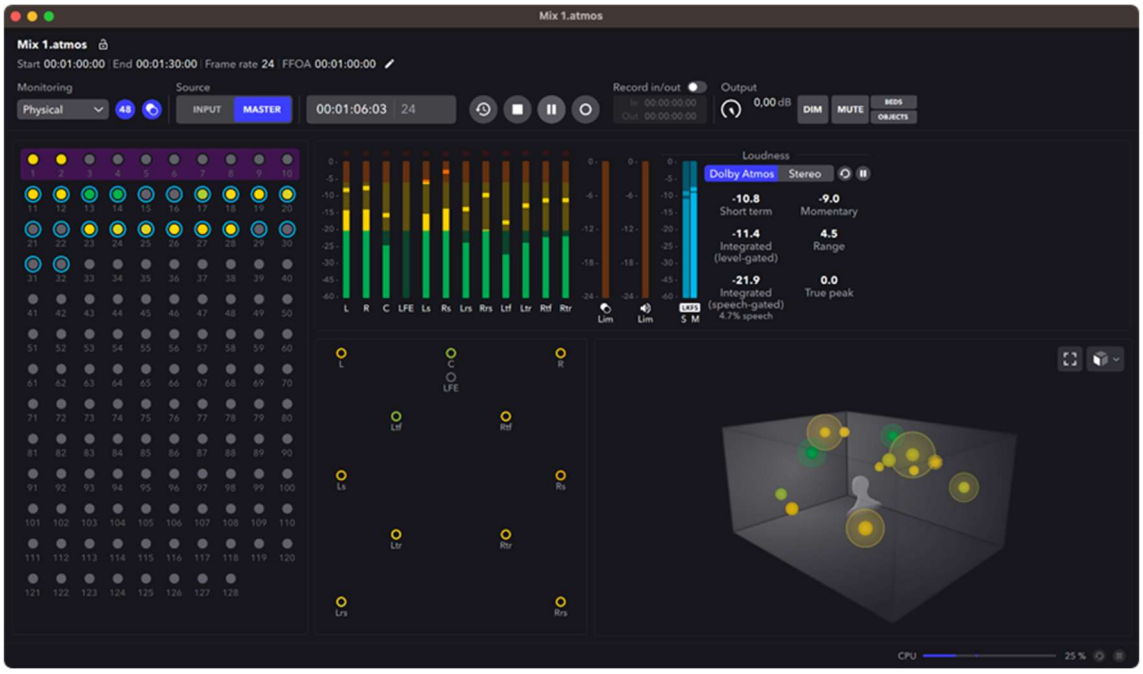

PICTURE 8. Dolby Atmos renderer playback view (Dolby n.d).

When playing back Dolby Atmos content on a computer, the renderer is used. As shown in picture 8, it has a visual RTA of things such as speaker placement, channel configuration, loudness levels, objects in use and object location. The Renderer can be used both for streaming platforms with Atmos (Tidal, Apple Music), music mixing and creation from any supported audio workstation or playing back ADM master files. (Dolby n.d.)

With the scalable architecture of endpoint rendering comes many different speaker configurations. As shown in Table 1, not all are equal in terms of creating an immersive listening environment. With fewer speakers, the localisation of distinct audio objects gets progressively worse.

3.2.3 Dolby Atmos for Film and Television

Introduced in 2012, Dolby Atmos Cinema can support a maximum of 64 independently fed speaker in a movie theatre, allowing each one to play unique audio different from the others. Although a theatre can have more than 64 speakers,

additional ones must share the same audio signal. Objects are usually reserved for sound effects, dialogue, and specific score elements. Sometimes music scores and sound effect ambiences might already be pre-mixed or edited in channel-based formats like 7.1 or 5.1. Atmos supports both channel-based content, referred to as audio beds, and object-based audio. Audio beds in Dolby Atmos are in the 7.1.2 format, combining a standard 7.1 setup (3 front, 4 surround, and 1 LFE channel) with 2 ceiling channels. This allows direct mixing of existing 5.1 and 7.1 tracks into the 7.1.2 bed, enabling mixers to utilize height elements through overhead speakers, even without using object-based audio. (Fonseca, N. 2020.)

In modern cinema production, most titles intended for theatrical release are mixed in Dolby Atmos. However, only a small group of audio engineers are involved in these big projects, typically on a limited few dubbing stages. The required skill set for such productions is much higher, owing to the usage of multi-computer systems and the utilization of the high-end variant of the RMU-Cinema. (Rothermich 2021, 242.)

3.2.4 Dolby Atmos for Music

Even though Dolby Atmos Music is new, introduced in 2019, it has rapidly transcended its infant stage. By 2021, a substantial volume of music content had been mixed in Atmos, signifying a shift from a niche offering to a product poised for widespread market adoption. A pivotal moment in this transition occurred in June 2021, when Apple announced the integration of Atmos content into its Apple Music service, notably without additional costs for subscribers. (Rothermich 2021, 243.) Further augmenting this momentum, in 2023, Apple implemented a policy whereby songs mixed in Atmos could be featured in curated playlists and would pay the artist more. (Digital Trends 2023.)

While prominent labels and artists are and will be producing lots of music content in Dolby Atmos, the driving force behind mass adoption on the production front is

the abundance of home studios, from the adequately equipped garage and garden shed studios to the all-important bedroom setups that most music producers own (Rothermich 2021, 243).

4 DOLBY ATMOS WORKFLOW FOR CINEMATIC MUSIC

In this chapter, I delve deeper into the creation and mixing of "Epicore", a contemporary form of dramatized orchestral music, in the Dolby Atmos format. This section encompasses various topics, including the creative distinctions between immersive and stereo workflows, strategic instrument placement to maximize the immersive nature of Atmos, effective use of the bed channel, and leveraging different renderers available. Additionally, I will provide insights into the mixing and mastering processes specific to Epicore in Atmos, emphasizing the optimal use of surround, immersive, and stereo reverbs, and delays.

“Dare to dream and fully utilize the 360-space, write music for immersive, record music for immersive, mix music for immersive. Make your entire production chain immersive!” (Maes 2024.)

4.1 Creating music for Atmos

Writing music while utilizing what Dolby Atmos has to offer requires a slightly different state of mind compared to stereo. One must not only think about what is in front or to the side, but also what to place above and behind or even what to move around the listeners head during the song. It can be hard to overcome the ingrained urge to work with just a traditional western orchestral seating and open the mind to the numerous creative possibilities that Atmos has to offer.

In Jacob Colliers (2021) Dolby Atmos testimonial, he talks about how stereo sometimes lacks the space for very big and dense arrangements and how using creative placement and automation of audio objects and reverbs is almost like using technology as an instrument (Dolby 2021).

The case study album associated with this thesis was crafted to showcase the extensive potential of Dolby Atmos for Music, utilizing the "Inside the Song" (picture 9) mixing technique. This technique positions the listener at the centre, surrounded by the song's elements from all channels, thereby offering a distinctive

experience. It allows listeners to discern and focus on song components that typically remain inaudible, while also providing enhanced spatial allocation for each audio element.

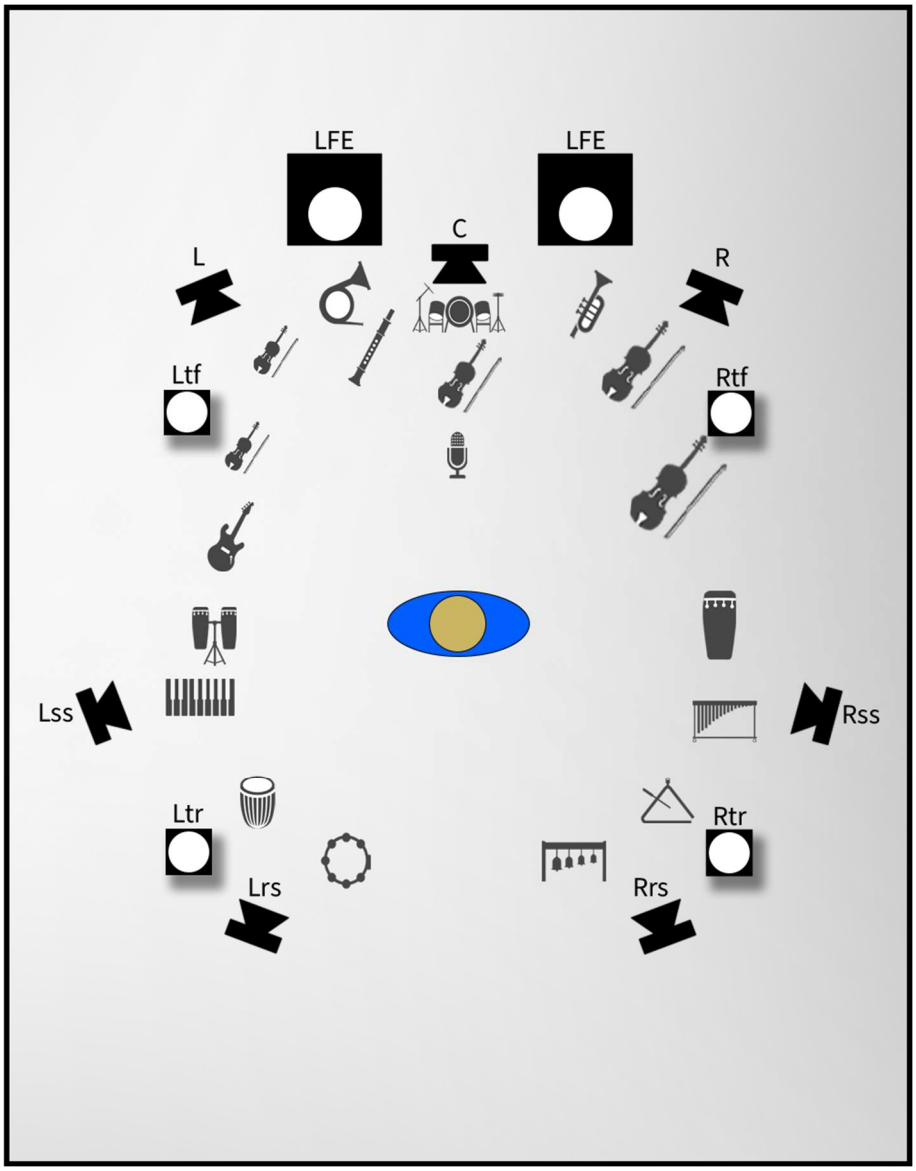

PICTURE 9. “Inside the song” depiction (Laine 2024).

Contrastingly, according to mixing engineer Janne Tauriainen in his 2022 Course, “Music Production in Emerging Media Productions”, the "best seat in the house" (picture 10) method aims to emulate the acoustic experience of being in the prime location within a concert hall (Tauriainen 2022). In this approach, the audio engineer focuses on delivering direct sound primarily through the left, center, and right channels. Meanwhile, the surround and height speakers are utilized exclusively for emitting reflections, delays, and reverberations, creating an authentic hall-like auditory simulation. This method is widely employed in classical music and film scores, where realism plays a major role in the production.

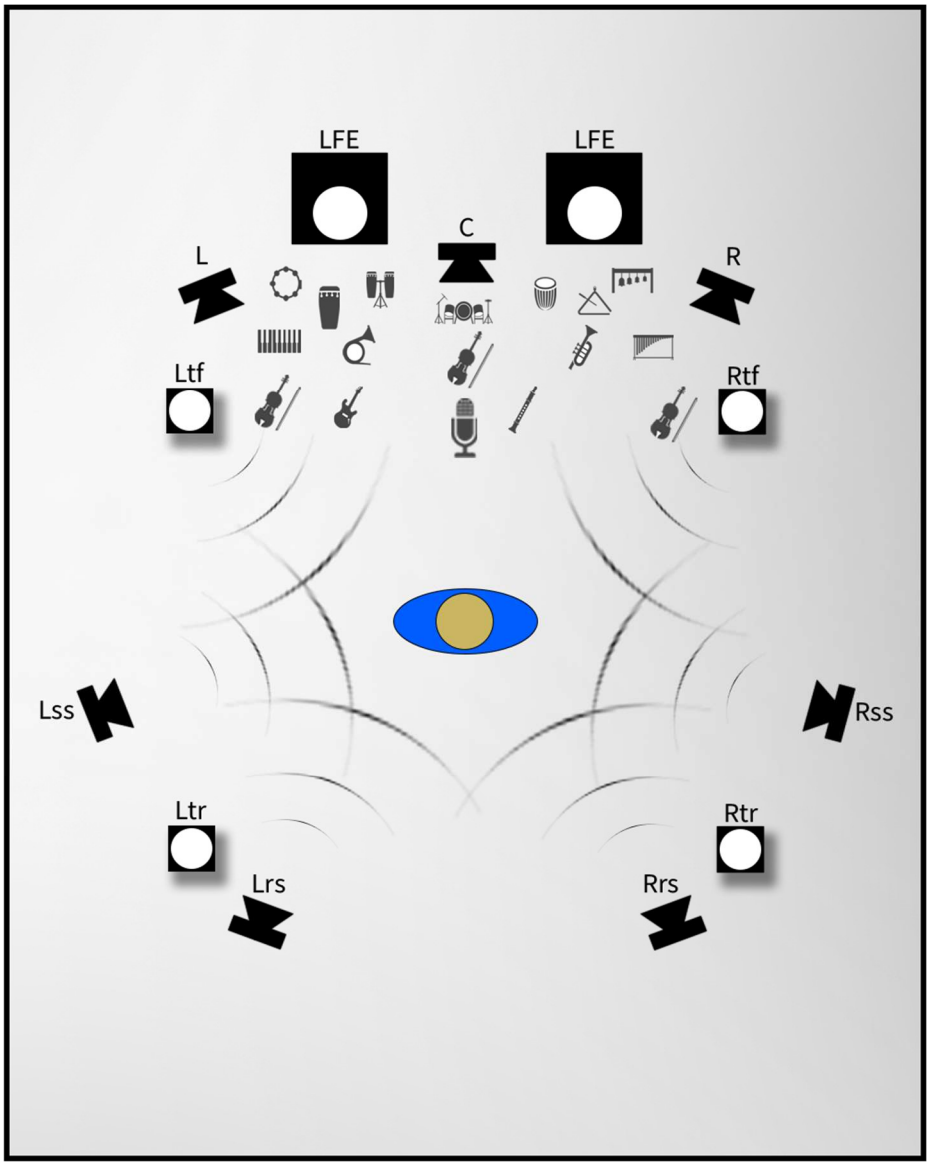

PICTURE 10. “Best seat in the house” depiction (Laine 2024).

4.1.1 Arrangement approaches for orchestral instruments.

During the experimental phase of arranging instruments the compositions, it became evident that instruments with higher frequency ranges benefited most from being positioned above the listener. Consequently, instruments such as flutes, piccolos, trumpets, triangles, and high mallets were optimally allocated to the upper channels. This arrangement effectively freed up additional space in the surround and LCR channels for synthesizers, strings, brass, sound effects, and percussion. This technique was used to great extent in track 5 “Will to Ascend” with woodwinds, mallets and backing vocals through the whole song. Positioning the high-pitched instruments above or behind the listener creates a sense of awe

upon their initial entrance, largely due to the unexpected source of the sound. This technique proved highly effective in Dolby Atmos arrangements, starting with a narrow and stereo introduction before introducing elements positioned above and behind the listener during choruses. Such a strategy significantly expands the song's spatial clarity, enveloping the listener and making it sound grandiose and larger-than-life.

Because of the additional space provided by Dolby Atmos, arrangements can be made denser and more populated than people might be used to. In practice, this means that more instruments and layers and can used without the piece sounding cluttered or congested. Picture 11 shows an excellent illustration of this technique used in track 5, "Will to Ascend," between 04:35 and 04:50. In the climax of the final chorus, a very dense arrangement unfolds: strings, low brass, main percussion, and lead vocals are positioned at the front, while woodwinds, high brass, high mallets, and high synths are layered above the front. Backing vocals are placed above the rear, with electric guitar and rhythmic synths occupying the side channels. Finally, bells, pads, and small percussion elements are placed behind, creating a rich, full soundscape that the listener can still pick out details from.

PICTURE 11. Renderer view, track 5 “Will to Ascend” (Steinberg 2024).

4.1.2 Instrument placement in 3d space.

Rothermich, in his 2021 publication "Mixing in Dolby Atmos #1: How it Works," highlights the phenomenon of "Super Mono." This effect arises when objects are positioned close to the center of the room, leading to identical signals being emitted by several speakers simultaneously. Such an occurrence, being unnatural, poses challenges for our brain's auditory processing capabilities. Furthermore, the replication of this signal across all speakers can lead to considerable build ups of frequencies in the downmixes and re-renders, potentially disrupting the balance of the mix. (Rothermich 2021, 266.) A solution to mitigate this problem is to position objects, as many as can be or all, around the room's periphery and in the ceiling, next to the speakers. This placement allows sound to be emitted from a specific point in the room through only a couple of speakers at a time, as shown in picture 11 and subsequently picture 12.

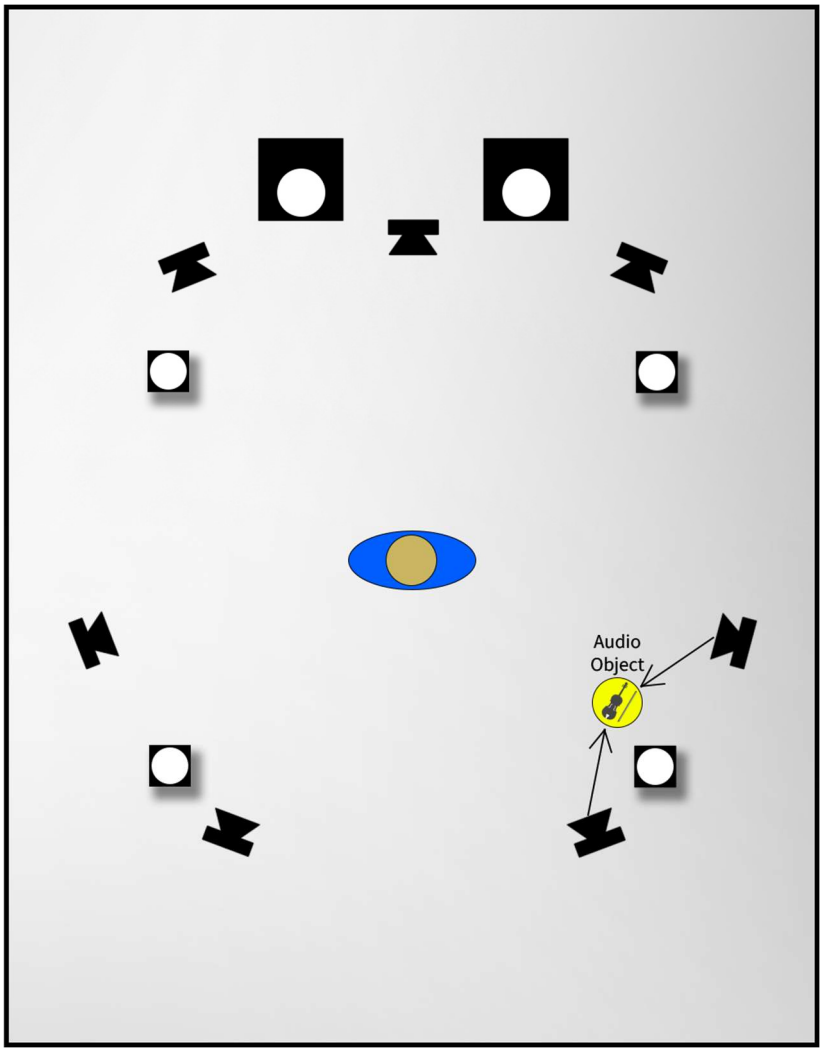

PICTURE 12. Sticking objects to walls (Laine 2024).

When deciding where to place instruments in an Atmos mix, it is crucial to avoid placing key elements in the rear channels, as this may prompt listeners to feel the urge to turn around to listen to them. A prime instance is when drum grooves incorporate percussion, and the percussion is panned behind the listener. This can make the percussion feel detached, ruining the groove. (Scheps 2022.) In my experience while working on the album, optimal results were achieved by placing the main instruments to the Left (L), Right (R), Left-Side Surround (Lss), and Right-Side Surround (Rss) channels. Meanwhile, auxiliary elements like mallets, effect layers, and shakers were panned to the rear or top channels. This arrangement not only helps the various re-renders and downmixes sound better but also enhances the binaural rendering process. Given that there are no hard-set rules for instrument placement in Atmos mixes, experimentation is key. By exploring different arrangements, you can identify when the mix becomes overly distracting or loses focus, thereby gaining insight into what works best and what does not.

4.1.3 Creative use of object automation

Steven Maes said it well in 2024 interview by the author; “the most dangerous thing in a mix is wanting to demonstrate the technology. You want to convey emotion and music, not give a demonstration of technology.” (Maes 2024.)
I wholeheartedly subscribe to the mentality when it comes to automation of objects. Main instruments such as strings, brass, percussion, and lead vocals can become very distracting or even disorienting if they are flying around the room. This is due to the it not being natural, and our brain not having the auditory processing capabilities to interpret it. Which is why, if you go through the tracks in the album associated with this thesis, you will notice that most of the instruments are indeed stationary in the front wall (L, C, R, Tfl, Tfr).

Components that greatly benefit from automation and movement are ear candy elements, transitional effects, risers, and delays. A good example of this can be found throughout track 2, “worlds apart”, where piano delays, risers and mallets are moving around the room. Using a mono delay, routing its return to an audio object, and then automating its movement diagonally across the room, from left to right rear speakers and then from right to left rear speakers, serves as a potent

technique. A few useful ways to make automation of objects easier is utilizing built in sequencers such as the one found in the Dolby Atmos Music Panner (Picture 13). These let the user program sequences of automations for objects in sync with the host daw tempo, instead of having to daw or record them manually. Another good way is using a tablet with the Avid Control application and recording the automation with your finger (Picture 14).

PICTURE 13. Sequenced object movement in the Dolby Atmos music Panner (Dolby n.d).

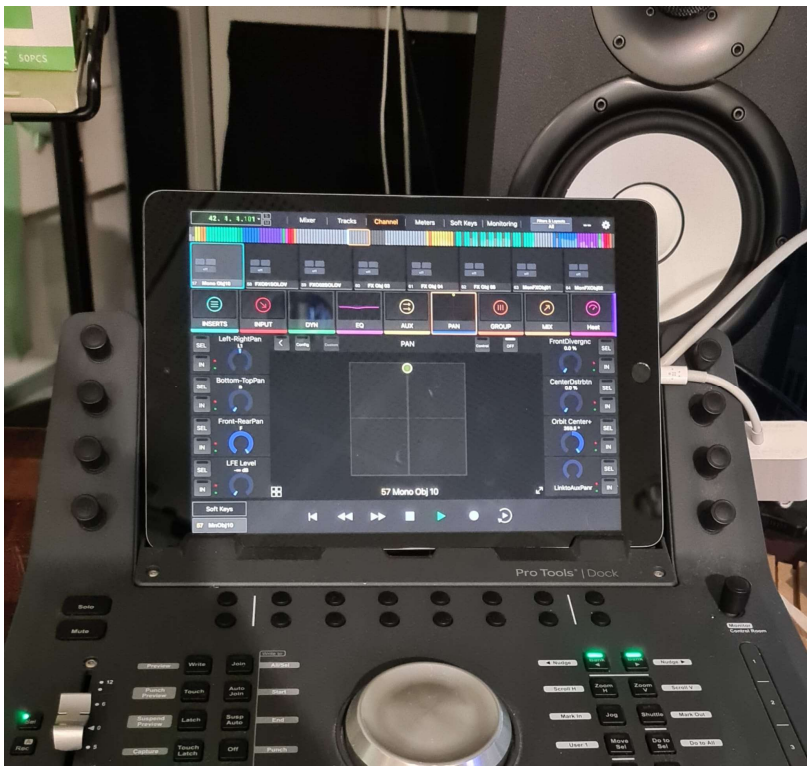

PICTURE 14. Avid Control Panner (Laine 2023).

4.2 Mixing in Atmos

As mixing engineer Mikko Raita stated in a 2024 interview by the author, mixing in Atmos is much less about juggling fighting frequency ranges, and more about creating an interesting and compelling space for the music to happen in along with creating interesting movement in said space (Raita 2024).

Essential considerations in Dolby Atmos mixing include the routing and three-dimensional spatial panning of tracks, specifically deciding whether to place tracks in objects or a bed. This decision is largely influenced by the desired movement within the mix. Objects offer versatile positioning capabilities via the Dolby Atmos object panner, providing full spatial mobility. In contrast, bed channels are restricted to stereo height channels, lacking the ability to pan front to back. Only objects allow exact placement in the three-dimensional sound field while ensuring that the spatial definition is preserved for the end listener. It must also be noted that objects cannot be panned to the LFE channel, meaning any signal destined for LFE must be routed to a bed. (Rothermich 2021, 265.) While mixing the album, I found It beneficial to route main percussion and extensive reverberations, like those from halls and rooms, as well as sound effects such as hits, booms, risers,

and whooshes, to the bed tracks. This economizes the object channels, making them available for the lead instruments and creative effects, enhancing the overall mix. This technique was used on all tracks throughout the album.

Dolby Atmos mixes benefit from mono tracks. Not only does a stereo track require two objects to be rendered (Left and Right), but it also makes panning and positioning significantly harder when compared to a single mono track due to the renderer trying to create a phantom center between the two objects, which can lead to unnecessary phasing problems. (Rothermich 2021, 267.) Solo instruments or individual point sources benefit from being in mono or being converted to mono by disabling features like stereoizers or room AB microphones in the virtual instrument. This strategy allows for more precise and easier placement among the leading instruments in the front wall.

Because of the multitude of speakers (or binaural rendering) required by Dolby Atmos, each major element of a track effectively gets its own speaker. For example, the lead instrument or vocal is panned center, woodwinds front top, high strings left, brass right, synths, and ambience side surrounds and small SFX along with pads are panned to rear surrounds. In practice this means that each element gets its own full range sound source instead of fighting for space with all elements in a traditional stereo system. As a result, this physical separation reduces the need for extensive EQ and compression on individual tracks, making it simpler to achieve clarity and distinction among elements in a dense mix.

While many stereo mixing techniques and principles are applicable to Dolby Atmos, especially during the track processing phase of mixing, several adjustments or new learning is necessary, and best practices must be established. Using VCA-faders for groups of objects (for example, a string section) is a very common workflow when needing to quickly adjust the level while leaving the relative differences between the objects the same (Rothermich 2021, 268). Traditional bus processing can only be applied to beds, as they are channel-based. If bus compression on objects is needed for example for an aggressive short strings section placed in the front wall or general mix bus processing, this can be achieved in one of two ways as described by mixing engineer Andrew Scheps in a 2022 interview by Puremix.

First, routing multiple tracks into a stereo, quad, 5.0 or 7.0 group, which itself has output channels sent into 2, 4, 5 or 7 objects placed where the corresponding speakers would be (for the front wall, 5.0 group, L, C, R, Tfl and Tfr). A normal multichannel processor such as a compressor or equalizer can be used for this. (Scheps 2022.) This is illustrated in picture 15.

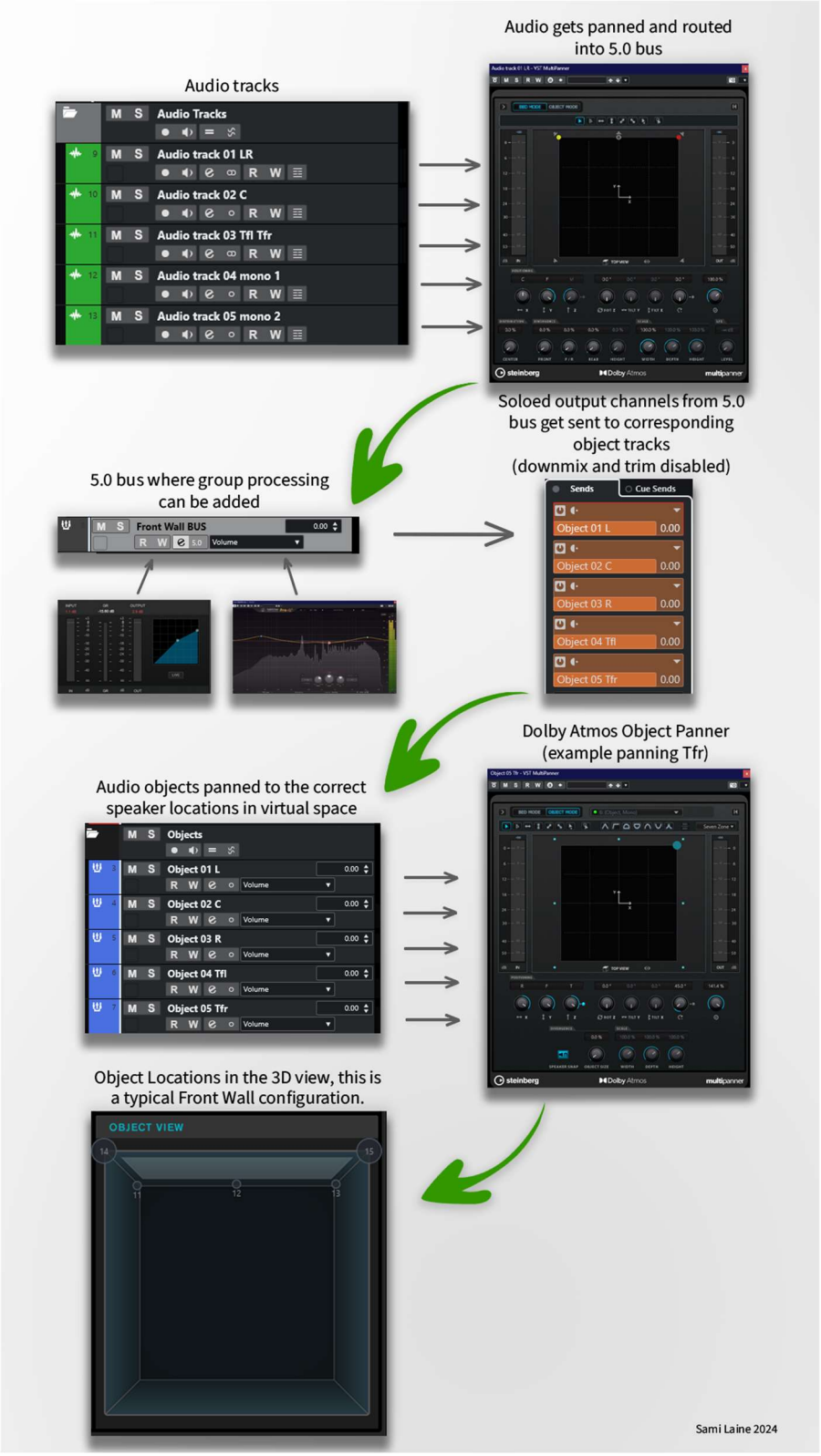

PICTURE 15. Bus processing on object tracks using 5.0 bus (Laine 2024).

Second, mix bus compression, eq and limiting using a plugin like HoRNet SAMP (Spatial Audio Master Processor) as shown in picture 16. With this plugin, one instance is placed on each object track, they all communicate with each other and work in unison to compress, eq, limit or clip all 118 objects and 10 bed tracks

together. The plugin can be controlled from any instance. This essentially creates a virtual master bus for Dolby Atmos mixing. (Hornet Plugins 2024.)

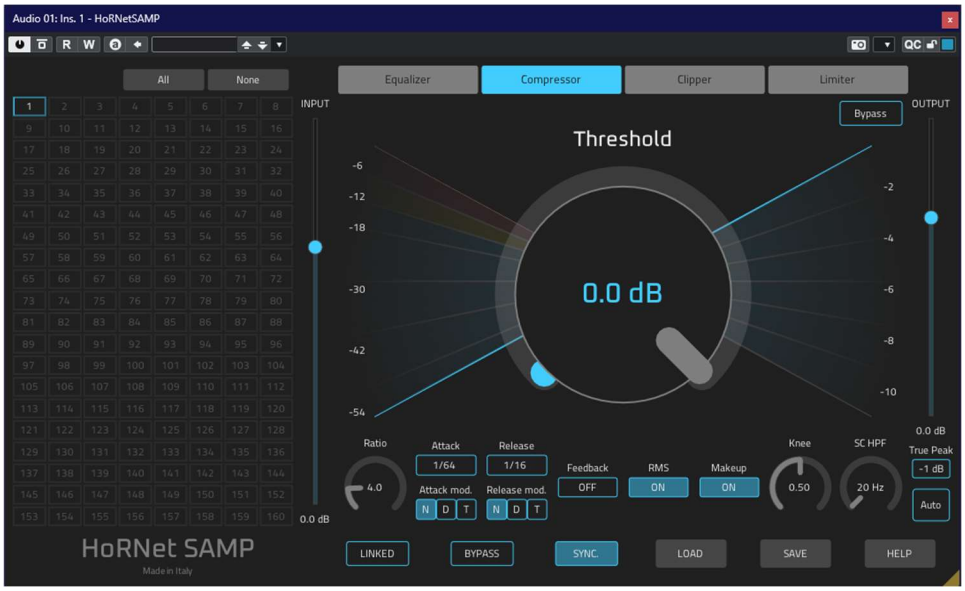

PICTURE 16. HoRNet SAMP (Hornet Plugins 2024).

While Dolby Atmos mixing allows for considerable artistic freedom, it enforces a specific standard for the end-product: it must not exceed -18 LUFS in loudness and must maintain a 0db or below true peak as measured by the DAR. This is essential for ensuring optimal audio quality and compatibility when re-rendering for lower channel counts and binaural. Dolby Atmos loudness can be measured with plugins such as Nugen Audio VisLM. (Dolby 2022).

4.2.1 The Dolby Atmos renderers

The Dolby Atmos Renderer (DAR) is the core of any Dolby Atmos capable production studio. It is the brain and “master bus” for creating Dolby Atmos mixes (Rothermich 2021, 34). A range of different renderers exist, some of which are inherent to DAWs, while others operate as standalone third-party solutions. The core functionality of all the different renderers remains the same, however. They all take in a signal plus XYZ coordinate metadata and output either a binaural render for headphones using speaker virtualization or based on the speaker configuration being used, choose the most suitable speaker to output the signal. An important note is some renderers are more limited than others and offer functionalities catered towards different uses.

I will firstly focus on Dolby's own standalone renderer (picture 8). This renderer runs as a standalone program outside your DAW, either on the same computer or on a dedicated RMU (Rendering and Mastering Unit). It requires a total of 130 audio channels between the DAW (128 for audio objects and 1+1 for LTC sync with daw) and the renderer uses either the Dolby Audio Bridge for internal routing on Mac, Jack router for internal and external routing on Windows, or the Dolby Atmos Music Panner for daws with no native object panner (MacOS only). For an RMU workflow, a format like Dante or MADI is needed to achieve the required channel amount between the two computers. (Rothermich 2021, 56-60.)

Dolby Atmos Composer (Picture 17) by Fiedler Audio is another standalone or VST renderer compatible with any daw. Instead of utilizing the daws own signal routing for audio objects and beds, each object or bed track gets Fiedler Audios BEAM panner plugin. The plugin takes the audio from the channel and routes it directly into the renderer, bypassing the daws signal chain entirely. The plugin also has a passthrough mode for spatial reverbs, sends and daws with native Atmos support. Dolby Atmos Composer supports multiple beds of differing channel counts. (Fiedler Audio 2024.)

PICTURE 17. Dolby Atmos Composer (Fiedler Audio 2024).

At the time of writing, Apple Logic Pro X, Presonus Studio One 6, Davinci Resolve Fairlight, Avid Pro Tools Studio/Ultimate 2023.12, and Steinberg Cubase/Nuendo 13 are all digital audio workstations (DAWs) equipped with native Dolby Atmos

rendering capabilities. This thesis primarily focuses on the renderer in Cubase 13 (picture 18), which was used in producing the album associated with this thesis. While it enables the creation and delivery of full, market-ready Dolby Atmos Music productions via the ADM BWF master file, it does have certain restrictions. Specifically, the C13 renderer only supports one standard 7.1.2 bed and does not support playback of Dolby Atmos master files or their associated file sets. Moreover, it is limited to a 7.1.4 or smaller speaker setup and lacks integrated features for bass management, limiting, and calibration of speakers. (Steinberg n.d.) Additionally, it is important to note that the loudness measurement is derived from the 5.1 loudness re-render, rather than the 7.1.4 render (Dolby 2018, 160).

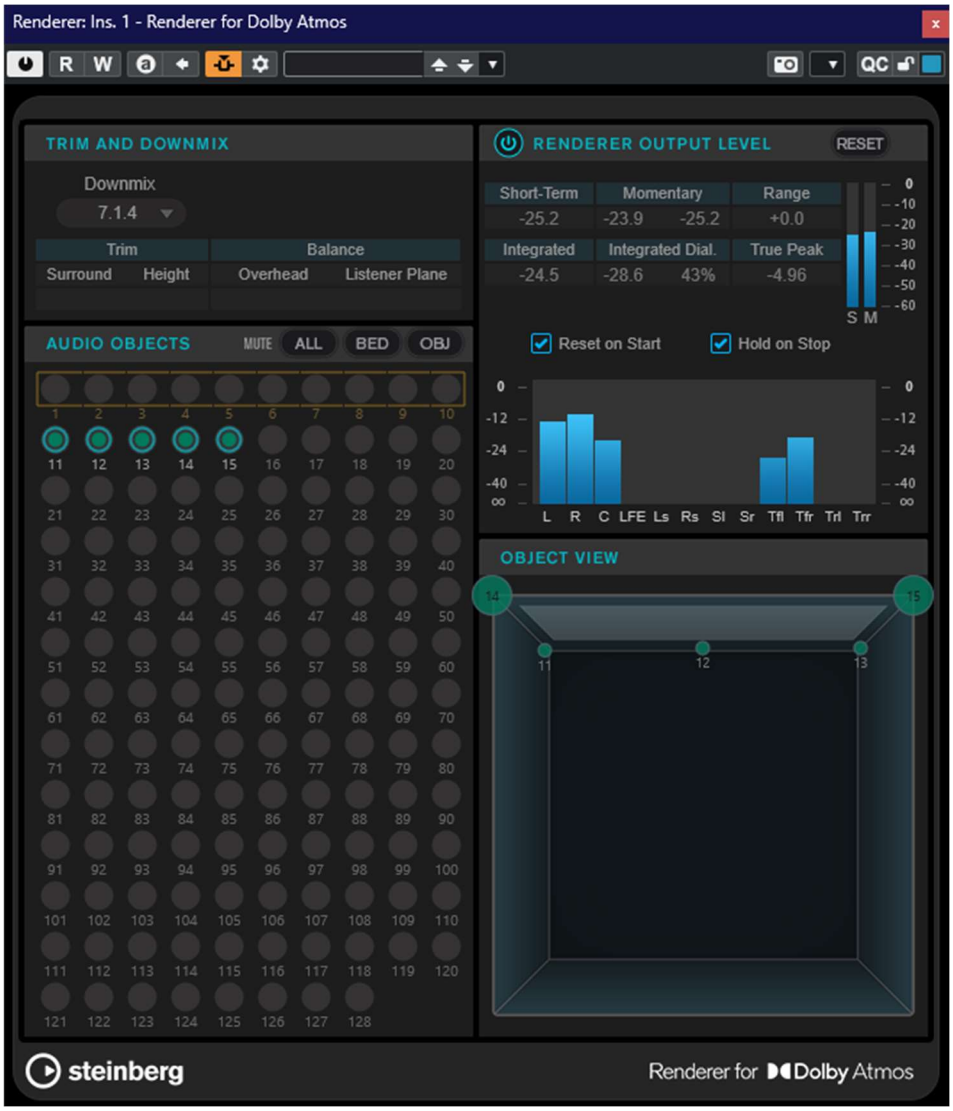

PICTURE 18. Steinberg Cubase 13 Dolby Atmos Renderer (Steinberg 2024).

4.2.2 Approaches to spatial reverbs and delays

There are many ways to dealing with reverberation in surround and immersive formats, some of which require the utilization of multiple convolution and algorithmic mono, stereo, quad or surround reverbs to build one cohesive immersive reverb surrounding the listener. Another easier, although more costly approach is using distinct immersive reverbs such as Fabfilter Pro-R 2, LiquidSonics Cinematic Rooms Pro, Nugen Paragon, Fiedler Audio Spacelab, DearVR Pro and Exponential Audio Stratus 3D. Some of these reverbs require the object to be panned twice, once for the renderer and a second time inside the reverb to simulate the early reflections (Wagner 2022). In this thesis I will go through the reverberation processes utilized in the creation of the associated album using custom built immersive reverbs containing multiple lower channel count stock reverb units and Fabfilter Pro R2.

In the album workflow, the main immersive reverberation bed was constructed from 2 instances of Steinberg RoomWorks on two sends, both routed into the standard bed. It is worth noting that this reverb bed is only a diffused layer, no early reflections or object panning is utilized. The first instance of RoomWorks (picture 19) using the “Surr. Cathedral.”-preset as a base, served the main surround 6.0 reverb feeding the surround speakers minus the center. This was then further diffused using the front/rear divergence in the Cubase surround panner.

PICTURE 19. RoomWorks surround reverb bed as used on the album (Steinberg 2024).

The second instance or RoomWorks (picture 20) using the “Hall Church” preset as a base, served as the stereo height reverb feeding only the height speakers. This reverb was slightly brighter compared to the surround and featured a significant 12db per octave low end roll off starting at around 800hz to control frequency buildup. To avoid a super mono situation, both reverbs were at a moderately low level, averaging about -18db, with the heights being even slightly quieter. Each reverb was also fed directly from the audio channels or sub-busses.

PICTURE 20. RoomWorks height reverb bed as used on the album (Steinberg 2024).

Distinct immersive reverb plugins such as Fabfilter Pro R2 (picture 21) were also utilized in the album starting from track 7. This approach is much simpler than constructing a custom reverb but can sometimes lack the control needed for a specific space. I found configuring Pro R2 in Cubase 13 as a main hall reverb bed was quite straightforward. The plugin was used as an insert on a 7.1.2 group track with the mix set to 100%, the track was then routed into the standard bed. The “Concert Hall LA”-preset was used throughout the album. To achieve correct spatialization of early reflections for object placement, the sends from objects must have the main panner and send panner linked. This is possible with Cubase in the channel settings window and selecting “Link Panners”. This way, whatever panning, or automation is applied to the main panner gets mirrored on the send panner going into the immersive reverb.

PICTURE 21. Fabfilter Pro R2 as used on the album (Fabfilter 2024).

5 CHALLENGES FACED WITH ATMOS TODAY

In this final section, I will talk about some issues with Dolby Atmos and a little bit on how to overcome them. As of the time of writing this thesis, to fully experience Atmos, Dolby recommends at least a 7.1.4 speaker configuration. Along with this, as Steven Maes and many other professionals in the field have said, the binaural render is not quite convincing enough for a lot of people to adopt yet (Maes et al, 2024). Another big reason for consumers expressing doubts about Dolby Atmos are the numerous sub-par Atmos mixes available on streaming platforms. Mikko Raita put it well in a 2024 interview by the author that some mixes barely stray at all from their stereo counterparts (Raita 2024). And when the binaural render is added to this, it can sound strange indeed.

5.1 Mixing environment

Maybe the biggest issue with working in Dolby Atmos (or any other immersive format for that matter) for most people is the space and equipment needed. This is because for Dolby Atmos music mixing, you will need specific speaker configurations. A 7.1.4 layout is a good starting point, with 7 surround speakers, 1 subwoofer, and 4 overhead speakers. This setup offers good spatial accuracy and is the most common. Smaller rooms can use a 5.1.4 layout which loses out on spatial accuracy but costs significantly less. For releasing music 7.1.4 monitoring is often preferred and even required by music services and labels (Dolby n.d.).

Of course, it is possible to mix a project completely binaurally on headphones, only utilizing binaural rendering. This is typically not recommended however (Rothermich et al, 2021), since the official Dolby Atmos delivery specifications state that a mix should be monitored in binaural, 5.1 and 7.1.4. It is also important to check and confirm translation between the different configurations. (Dolby 2022.)

Thornton (2022) recommends that in addition to having the correct layout of speakers, they should ideally be of the same brand and model. However, it is commonly accepted (Thornton 2022, Dolby n.d, Kirkman 2020) that using smaller models from the same brand for the rear and height speakers is beneficial. This

is because mounting large speakers on the ceiling can be challenging. In summary: the front speakers should match, and it is preferable if the side speakers also match the front ones. However, the side, rear, and height speakers can be smaller models from the same brand.

All this leads to mixing and producing in Dolby Atmos being out of reach for many aspiring engineers and creators due to the mounting cost of all the speakers, mounts, input & output hardware, and sometimes software.

5.1.1 Consumer Listening configurations for Dolby Atmos

Dolby Atmos can be found in surprisingly many places outside its flagship territory of the movie theatre and professional mixing studio. Many soundbars on the market right now offer at least 3.1.2 and up to 11.1.6 using a combination of upwards and sideways firing directional speakers that reflect sound from walls and flat ceilings along with satellite speakers placed behind the listener. Smart speakers such as the Amazon Echo Studio also support Dolby Atmos, utilizing multiple speakers around its enclosure firing in all directions. These also rely on wall reflections to achieve a 3-dimensional sound field. (Rothermich 2021, 109.)

Even laptops, mobile phones and tablets feature Dolby Atmos and speaker virtualization, although this is most beneficial when used on headphones (Rothermich 2021, 110). That said, I have AB tested the Dolby Atmos enabled “Asus Zenbook Pro 14 Duo”-laptop, which features multiple built-in speakers like many modern soundbars do. (Asus 2024). What I found when enabling Atmos, there was a definite increase in clarity and stereo imaging.

Sadly, none of the above-mentioned formats and devices truly replicate the experience created by a full 7.1.4 speaker configuration, but the technology is constantly improving.

5.1.2 Dolby Atmos in vehicles

Atmos capable cars have started becoming more popular over the recent years with many big manufacturers such as Mercedes, Polestar, and Volvo. The principle is the same as other speaker systems where there are multiple speakers placed around the cabin and in the ceiling. (Dolby n.d.) These features are however limited to the very high-end luxury cars as of the writing of this thesis.

5.2 Software Support

While Dolby Atmos for Music enhances the end-user experience if consumed following the Dolby recommendations, integrating it into various software for consumers and creators alike has proved quite a complex and lengthy process, with many daws, streaming platforms and music players not supporting it quite yet.

5.2.1 Digital Audio Workstations

Native Atmos Compatible Daws were briefly listed earlier in this thesis, but I will go through some key features and limitations that they have here.

Apple Logic Pro X

Logic Pro 10.7 introduced native Dolby Atmos support with a built-in renderer capable of up to a 7.1.4 output configuration. Plugins like Space Designer and the Limiter also got updated to support 7.1.4. Logic Pro also supports multiple rendering modes such as Apple Music's spatial audio and speaker virtualization for immersive sound on Apple devices. (Sound on Sound 2023.)

Steinberg Nuendo 13

Nuendo 13 features an integrated Dolby Atmos renderer supporting up to a 7.1.4 output configuration. Nuendo itself supports up to 9.1.6, however the internal renderer does not. This means for higher channel counts; the external renderer must be used. The internal renderer does however support downmixes and trim changes for binaural renders, much like Cubase 13. (Sound on Sound 2023.)

Pro Tools Studio/Ultimate

Ever since update 2023.12, Pro Tools Studio and Ultimate now feature an integrated Atmos renderer. Output channel support starts from 2.0 along with binaural and goes all the way to 7.1.4 and even 9.1.6 on Pro Tools Ultimate. The update also includes loudness metering for Atmos via an independent re-rendering send point which can also be utilized for additional 5.1 or 2.0 fold-downs. (Sound on Sound 2023.)

Presonus Studio One 6

As of the writing of this thesis, the latest version of Studio One 6 (version 6.5) has a native Dolby Atmos renderer with support for up to a 9.1.6 output configuration. Presonus also added a 7.1.2 immersive reverb and a surround delay to compliment the update. (Sound on Sound 2023.)

For DAWs that do not natively support Dolby Atmos, solutions like Fiedler Audio Dolby Atmos Composer can be used to add compatibility. These can however vary in feature-set and integration depending on which daw is used. (Fiedler Audio 2024.)

5.2.2 Consumer applications

While Dolby Atmos for Music offers an immersive experience, its adoption in consumer applications faces challenges. Maybe the biggest one at the time of writing is streaming platform support. Only a few major platforms (Tidal, Amazon music and Apple Music) really support Dolby Atmos fully (Dolby n.d). This means that to most people who are using Spotify, they would have to purchase a second subscription to one of the three platforms mentioned above to experience Dolby Atmos. This is because Spotify does not yet natively support Dolby Atmos or any other immersive audio format.

6 DISCUSSION

Dolby Atmos for Music is and the workflows surrounding it are in a constant process of development. From new plugins and software to help the creator achieve their goals to speakers, applications and other playback systems and devices that help make Dolby Atmos more accessible to the average music enthusiast and professional audio engineer alike. Even five years ago as of the writing of this thesis, Atmos for Music was a distant dream for some and an expensive passing gimmick for most home producers and smaller production studios. Now however, it has become available for literally anyone with a PC or Mac, a pair of headphones and an interest in immersive audio.

The big differentiator between Dolby Atmos Music and previous surround or immersive formats for music such as Quadrophonic audio or 5.1, and the reason they were unsuccessful for music consumption was the playback formats they were locked into. These were usually expensive and if a song was mixed in a specific format, it could only be played back on a system that was specifically built for it. With Atmos for Music, it can be played back on any speaker configuration because of the scalable nature of object-based rendering. This ensures that there are no hardware related limitations.

During the process of creating the affiliated case-study album demonstrating the benefits of Dolby Atmos in dense mixdowns such as those found in Epicore and modern trailer music, I conducted several questionnaires where people were invited to listen to three songs from the album (Stargazer, Will to Ascend and Nightfall), both in traditional stereo and in 7.1.4 Dolby Atmos. The feedback received from these exercises catered heavily towards the Dolby Atmos versions of the songs with the consensus being that in Atmos, small details are easily discernible, songs sound “fuller” and all encompassing. There was even a comparison stating that in some cases, going from Atmos back to stereo is like going from stereo to mono.

Especially for Epicore, where the mixdown can be very dense and consist of hundreds of individual tracks and layers occupying overlapping frequencies (as in

“Will to Ascend”), Atmos offers the space for all these elements to co-exist without extreme processing on individual channels. It is very easy to achieve a pleasant tonal balance when you can place offending elements behind you or above, where they will not be clashing with whatever is in front. All this does require a bit of getting used to and a small mindset adjustment, especially because Atmos has no traditional mix bus or master bus. Experimenting is something I would strongly encourage everyone to do however, since it is the only way to really find out what Atmos is and more importantly is not capable of. Along with this I think it is also good to try going far with immersive reverbs, object placement and automation when first getting into Atmos or other immersive formats. This way you will find out where the sweet spot for all these new things is.

Lastly, I would like to really stress the point of planning when creating anything in Atmos. While upmixing stereo stems to Atmos does work and is a viable way of converting older works into immersive audio, the result is nowhere near as good as a fully immersive composition, created for the purpose. I learned this with the first song on the album, “Ten Wishes”, which was not really created with immersive in mind, but only upmixed afterwards. It is important to have some sort of plan or vision on how, where and *when* elements should be placed in 3d space, and if they should be stationary or have movement. While moving objects around can be a viable way of making a piece more interesting, if done too often or incorrectly it can have the adverse effect of seeming too on the nose or even distracting from the music.

After the research and practical tasks performed for this thesis, I am convinced that even though its current drawbacks, Dolby Atmos is a very suitable or even preferrable format over stereo for the creation, mixing and consumption of Epicore and other genres that feature a dense but not overly aggressive mixdown.

REFERENCES

Asus. 2024. Asus Zenbook Pro 14 Duo OLED. Read on 15.03.2024. https://www.asus.com/fi/laptops/for-creators/zenbook/zenbook-pro-14-duo-oled-ux8402/

Digital Trends. 2023. Apple's Dolby Atmos Music Bounty Could be a Disaster for the Format. Read on 31.01.2024. https://www.digitaltrends.com/home-theater/apple-dolby-atmos-music-bounty-spatial-audio/

Dolby. N.d. Getting Started with Dolby Atmos Music. Read on 31.10.2023. https://professionalsupport.dolby.com/s/article/Getting-Started-with-Dolby-Atmos-Music?language=en_US

Dolby. N.d. Why is the channel order of live re-renders different than exported re-renders? Read on 08.01.2024. https://professionalsupport.dolby.com/s/article/Why-is-the-channel-order-of-live-re-renders-different-than-exported-re-renders

Dolby. 2018. Dolby Atmos Renderer Guide.

Dolby. 2020. A century of innovation, an abridged timeline of the last 100 years of cinema presentation.

Dolby 2022. Dolby Atmos Music Master Delivery Specification.

Dolby. 2023. Music Support FAQ. Read on 28.01.2024. https://professional.dolby.com/music/support-faq/#gref

EBU ADM Guidelines. N.d. Types of Audio. Read on 13.01.2024. https://adm.ebu.io/background/audio_types.html

Fiedler Audio. 2024. Dolby Atmos Composer. Read on 28.01.2024. https://fiedler-audio.com/dolby-atmos-composer/

Fonseca, N; Sound Particles. 2020. All you need to know about 3D Audio.

Laine. S. 2024. Thesis Album Listening Link. https://docs.google.com/document/d/1U1YnqEVBxfp1fbGdes082sdC3-k-bsDCiSR0u9CeTXo/edit?usp=sharing

Tauriainen J. 2022. Music Production in Emerging Media Productions.

Hornet Plugins 2024. Hornet Samp. Read on 08.03.2024 https://www.hornetplugins.com/plugins/hornet-samp/

Hull, J. 1999. Surround Sound Past, Present, and Future. A history of multi-channel audio - from mag stripe to Dolby Digital.

Jacob Collier in Dolby | RESONANCE. Dolby. 13.03.2021. YouTube.

Maes, S. Mixing Engineer. 2023. Interview on 09.01.2024. Sami Laine.

Wagner, M. Mixing engineer. 2022. How to add reverb to Dolby Atmos objects. Watched on 12.03.2024.
https://www.youtube.com/watch?v=_Vp-U-OmX3E&t=345s

Wagner, M. Mixing engineer. 2022. A simple way to add reverb to Dolby Atmos objects in Cubase or Nuendo. Watched on 12.03.2024.
https://www.youtube.com/watch?v=m5hzgNOowSE&t=686s

Mix online. 2006. 1877 Thomas Edison Cylinder Recorder. Read on 13.01.2024.
https://www.mixonline.com/technology/1877-thomas-edison-cylinder-recorder-383579

Raita, M. Mixing Engineer. 2024. Interview on 10.03.2024. Sami Laine.

Rothermich, E. 2021. Mixing in Dolby Atmos #1 How it Works. A different type of manual – the visual approach. 1st Edition. Los Angeles: Edgar Rothermich.

Spotify 2024. Epicore playlist.
https://open.spotify.com/playlist/37i9dQZF1EIcVWkT2o5MpE?si=f00e277f60704853

Steinberg n.d. Authoring and Mixing for Dolby Atmos. Read on 12.03.2024.
https://steinberg.help/cubase_pro/v12/en/cubase_nuendo/topics/surround_sound/surround_sound_dolby_atmos_mixing_c.html

Steinberg n.d. VST MultiPanner Plug-in Panel in Object Mode. Read on 04.02.2024.
https://steinberg.help/nuendo/v11/en/cubase_nuendo/topics/surround_sound/surround_sound_dolby_atmos_vst_multipanner_object_mode_r.html?hl=vst%2Cmultipanner

Maes S. 2024. About. Read on 25.03.2024.
https://www.stevenmaes.eu/

Studio Kekkonen n.d. Mikko Raita. Read on 25.03.2024.
http://www.studiokekkonen.com/mikko/

Sound Particles. 2022. What is Object-based Audio? Read on 13.01.2024.
https://blog.soundparticles.com/what-is-object-based-audio

Sound on Sound. 2023. Atmos-capable DAWs. Read on 15.03.2024.
https://www.soundonsound.com/reviews/atmos-capable-daws

Thomas, C. 2022. Flexible Dolby Atmos Music Creation Systems | Dolby Atmos Music Creation Webinar Series on 28.1.2022. United Kingdom.

Thornton, M. 2022. Mixing Music In Dolby Atmos - Everything You Need To Know. 5/2022. Read on 31.10.2023.
https://www.production-expert.com/home-page/2020/7/1/everything-you-need-to-know-about-dolby-atmos-home-entertainment-r57h5

Puremix; Scheps, A 2022. Dolby Atmos Discussion Panel w/ Andrew Scheps Talks To Awesome People. Watched on 29.02.2024.
https://www.youtube.com/watch?v=cnX4pVrxqq0

Puremix; Scheps, A 2022. Andrew Scheps Mixing with Dolby Atmos. Watched on 29.02.2024.
https://www.youtube.com/watch?v=cnX4pVrxqq0

APPENDICES

Appendix 1. Interview, Steven Maes. (1/2)

1. What made you interested in Dolby Atmos?

I have been working in surround sound since 2004, both during live concert recordings and for CD productions. So, the transition was quickly made.

2. How does the mixing mindset differ from traditional stereo?

Mixing is about music and emotion. Immersive sound allows you to convey these much more easily. So, the mindset remains the same.

3. Following up from #2, what is your approach to equalization in Atmos?

For me, your ears, brain, and feelings are the only things that matter, so you work with them. Listening and anticipating. Everything depends on the style of music. There are no tricks. You can think about the use of your LFE and how to approach it, but even there, there are many directions you can go, and everything depends on the production.

4. Where do you see Dolby Atmos (or other object-based formats) in 5 years' time?

I hope it will become as commonplace as stereo, without us having to think about it... just that it's there. I fear it won't be like that because people are not presented with enough good content. You must let your audience hear good things. Also, a lot will depend on whether we can elevate binaural headphone listening to a higher level. That is currently the biggest stumbling block.

5. What stands out to you in Atmos compared to other mediums like DTS: X?

No experience.

6. Would you recommend that today's mixing engineers and producers should think about the possibility of their work being up mixed to Atmos while working on it?

Appendix 1. Interview, Steven Maes. (2/2)

I believe this is the only thing that matters from the perspective of a producer, engineer, and musician. You must start from the beginning. Your music, recording, and mixing process all must be thought out from the start to end up in immersive. Going from immersive to stereo is quite easy, but the other way around is always troublesome and usually artistically unsatisfying.

7. How does Atmos for music differ from Atmos for film?
No experience.

8. What would be your 3 most important pieces of advice for people getting into mixing and creating in Dolby Atmos?
Dare to dream and fully utilize the 360-space.
Write music for immersive.
Record music for immersive.
Mix music for immersive.
Make your entire production chain immersive!

9. What would be some pitfalls to avoid when mixing in Atmos?
Don't start with stems that were only intended to make a stereo production.
Don't move objects around too much.
The most dangerous thing in a mix is wanting to demonstrate the technology.
You want to convey emotion and music, not give a demonstration of technology.

10. Where do you think Atmos sits in the world of surround and immersive formats? (compared to ambisonics, DTS:X, 7.1, D&B soundscape etc.)
It might not be the best format and Dolby Atmos is a very commercial company, but at least it's a standard that is widely supported. That's important if we dream of a completely immersive music world in five years...

11. What are things you think Dolby could do better?
A bed should not be limited to 7.1.2
I think Binaural rendering is poor.

Appendix 2. Interview, Mikko Raita. (1/4)

1. What made you interested in Dolby Atmos?

- Since I have worked with surround sound occasionally from my first professional years (SACD 5.1 music album mixes in the early 00's) I have been very intrigued with surround for music. IMHO it sounds amazing, when done well. Since around 2016 I have worked more and more with film and TV music, and that's where Atmos was first commercially available, and when I was told in 2018 that a film I was going to be mixing the music for (Ilosia aikoja, mielensäpahoittaja) was going to be mixed in Atmos, I proactively offered to record and mix the music in Atmos as well. With that, I got to be the first Finnish film music mixer to have an Atmos film score released.

2. How does the mixing mindset differ from traditional stereo?

- Atmos has much more "real estate" available, to repeat a platitude. Mixing is much less about juggling fighting frequency ranges, and more about creating an interesting and compelling space for the music to happen in, and to create interesting movement in that space (although even in stereo mixing one of my goals has been to create interesting movement and dynamics across the stereo field, without resulting to obvious pan pot gimmicks).

3. Following up from #2, what is your approach to audio processing in Atmos?

- As much of the material that gets mixed in Atmos is still regularly produced and/or recorded stereo material, upmixer tools are important in Atmos and surround in general. Although, they shouldn't be used as a "blanket approach" and the use of them or other "spatialization techniques" should be totally content- and context-dependent. I personally love true decorrelated multichannel reverbs like Liquidsonics' many tools (among others), but I find that I still need to tweak paramenters manually to create a more realistic (or interestingly unrealistic) room simulation with them.

Appendix 2. Interview, Mikko Raita. (2/4)

As far as EQ processing, to me Atmos sounds much “warmer” so there can be less need to carve out harshness in tracks, and with the "real estate" available, full mids can often be more present.

The big change to stereo is that there is no singular "2-buss" or master path available to all tracks, so using a master compressor is not as intuitive. Some argue that one shouldn't even use processing like that in Atmos, as the format allows for more dynamics due to the delivery specs, but I personally feel that master compression is an essential part of many music styles' sonic DNA, and I indeed create "true" linked master compression into many of my mixes, via elaborate sidechain and routing strategies.

4. Where do you see Dolby Atmos (or other object-based formats) in 5 years’ time?

- I believe (or at least hope) that object- or scene-based immersive audio will end up becoming the standard delviery method for the majority of sound content (including) music in that time.

5. What stands out to you in Atmos compared to other mediums like DTS: X, Auro 3d and Sony 360?

- The widespread delivery ecosystem and the relative ease in how consumers can listen to Atmos content, compared to most of the other platforms. The upcoming Google- and Samsung -led open source IAMF platform might still be able to disrupt things, but as it stands, Atmos seems to be the "VHS" of immersive audio.

6. Would you recommend that today’s mixing engineers and producers should think about the possibility of their work being up mixed to Atmos while working on it?

Appendix 2. Interview, Mikko Raita. (3/4)

- IMHO producers and recordists should start to work with at least some form of surround or immersive monitoring in use from the get-go. I have personally done it even listening to full proper Atmos when recording, but it can be great to even just a have a quad monitoring setup available during recording and production. As far as conventional stereo mixers, yes, they should start preparing appropriate stem deliveries for immersive mixing, but better yet, start mixing in immersive first and delivering the stereo version from the 2.0 re-renderer (stereo downmix), which I have done on many projects now.

7. How does Atmos for music differ from Atmos for film?

- Atmos for music is for now an inherently relatively heavily compressed medium both psycho-acoustically and spatially, as nearly all streaming Atmos content is consumed with the lossy and spatially compressing DD+JOC codec (or AC4-IMS for some binaural content). We are hoping for the higher quality True HD codec (used in Blu-ray and offered as MKV downloads by some high-end labels) to be available for music streaming, but it's not happening yet. These same formats are used to distribute Atmos TV and Film for home consumers, but feature films are mixed first and foremost to the theatrical experience, where Atmos is a truly lossless platform. Also, Atmos for theatrical delivery needs a distinctly different mix aesthetic, as we need to account for the use of the center channel (often *mostly* needed for film dialog and SFX), but also seat coverage, i.e. we *need* to use some of the center channel as well (when many Atmos Music mixers omit the center channel completely - although I personally think this is not the best way to do Atmos and it's definitely leaving some sonic possibilities untapped).

8. What would be your 3 most important pieces of advice for people getting into mixing and creating in Dolby Atmos?

- Start by mixing in 5.1, and *really* learn how the multichannel audio standards and tools work. It takes years, but it will be worth it.

Appendix 2. Interview, Mikko Raita. (4/4)

9. What would be some pitfalls to avoid when mixing in Atmos?
- For Theatrical delivery, we *nearly never* want to make the moviegoer be distracted from the story. It is all too easy to be inspired by the new possibilities in 3D immersive reproduction, but if we elicit a neck movement as music or sound mixers, we have usually failed.

In Atmos Music mixing, a common pitfall is nearly the opposite: Making boring immersive mixes, that don't really use the 3D space fully, and don't use the height channels for more than some mild basic reverb. There are some "big names" getting into Atmos right now, whose releases have been very, very safe and not really diverging much from the stereo mixes. It is a new artform which we should embrace. I repeat that the best way going forward would be to mix the Atmos version first.

10. Where do you think Atmos sits in the world of surround and immersive formats? (compared to ambisonics, dts, 7.1, D&B soundscape etc.)
- See #5. 7.1 is part of Atmos already, and it's often "very near" to a good Atmos experience (i.e. for some content, 7.1 can be enough for "most of the Atmos experience", much more than 5.1, but the material cannot of course be ceiling-heavy). Soundscape is a live performance platform, which is not a part of my expertise (although I have "hacked" a Soundscape system to play back Atmos mixes at Finnish National Opera's Alminsali, which worked fine enough).

11. What are things you think Dolby could do better regarding Atmos?
- Many of Dolby's tools have *horrendous* user interfaces. They should really focus on the features and ease of use of Atmos-related tools and/or open their API more to outside developers. In the end and preferably immersive audio tools should end up as "open source" and as ubiquitous as stereo and "regular" surround (5.1) tools are now.