Transportation Planning and Management for VIP Plastics Ghana Ltd in Kumasi,Ghana

Ahmed Bonaparte

Degree Thesis

2015

Plastics Technology

DEGREE THESIS	
Arcada	
Degree Programme:	Plastics Technology
Identification number:	12633
Author:	Ahmed Bonaparte
Title:	Transportation Planning and Management for VIP Plastics, Ghana Ltd in Kumasi,Ghana.
Supervisor (Arcada):	Wiberg Björn
Commissioned by:	Arcada

Abstract

The idea of this project was to find a better way of arranging equipment and departments in a plastic manufacturing facility so that transportation cost can be minimized in the transporting of the raw material from the source to the factory and throughout the manufacturing process until the finished product was achieved. A case study was made on VIP Plastics Ghana ltd and it was found that one of the key determinants of the unit cost of the finished product was transportation of the material/unfinished product. A research was made on types of vehicles which are more economical, reliable and environmental friendly. Different types of factory layouts were also studied by considering the production process of the factory. Data collected was used to optimize the current product- oriented facility layout of the factory.

In conclusion in order for VIP Plastics Ghana Ltd to compete more efficiently in the Ghanaian market more environmental friendly and smart carriage vehicles were proposed. Moreover, the current facility layout of the factory was developed and optimized to minimize transportation cost so that VIP Plastics Ghana Ltd managers can make optimum allocation of departments/equipment. This will enable the factory to meet production capacity and customer demand at a low transportation and production cost.

Keywords:	Transportation planning,Factory layouts, Layout planning, Environmental pollution, Cost equation, Assembly line balancing, Linear programming
Number of pages:	48
Language:	ENGLISH
Date of acceptance:	26th MAY 2015

CONTENTS

FIGURES

TABLES

FOREWORD

In the first place I thank Allah the Almighty for given me the opportunity and guidance to carry out this project successfully. I am deeply indebted to my thesis supervisor Björn Wiberg for his encouragement and excellent direction. I also extend my gratitude to Mathew Vihtonen who is my examiner for his patience and advice. My sincere thanks also goes further to the Program Director, the head of Materials and Energy Department, academic and administrative staff of Arcada as well as all the teaching staff and study coaleagues. Last but not the least is to my dear wife and family who stood firmly behind me in my sickness in the course of writing this project.

1 INTRODUCTION

Transportation is the movement of goods, people, animals or services from one place to another. The different modes of transport are air, rail, road and sea. The field of transportation can be divided into infrastructure, vehicles and operations. Transportation is very important in the life of any business or company and better planning and utilization of transport increases a company`s profit and reduces cost.

Factories and businesses are mostly faced with economic optimization such as minimizing cost of non-economic items like goods or services that are very important to the growth and existence of the factory or business. Transportation models are mostly concerned with the best possible way a material or product can be transported from a source also known as supply origin to a customer also known as demand destination. The main objective of a transportation model is to fully satisfy the demand requirement of a company within its production capacity constraints at a least possible cost.

Anytime there is a physical movement of goods or material from a source to a destination through a medium or variety of means, there is a need to reduce the cost of transportation so that profit on sales can increase. The problem is a linear programming which deals with transporting goods from source to destinations. The problem determines truck schedules that reduce transportation cost and at the same time satisfying supply and demand limits.

1.1 Aims and Objectives

The main aim of this thesis is to find a better way of transporting plastic raw materials from a source to the factory of the company in such a way that transportation cost will be reduced and profit will increase. Moreover transportation of raw materials will meet production capacity and demand.
This includes

- Design a well defined transportation model for the company that will sustain the transportation planning of the company.

- Propose a better means of transport for the company that will improve delivery performance, reduce unnecessary transportation cost and reduce harmful gas emission to comply with international regulations.
- Propose a good factory layout for locating the departments and production equipment in the factory.

1.2 Scope of Studies

This thesis is to help companies to identify different transportation models and different kinds of factory layouts. Readers can find the best way and means of transporting goods or materials from a source to a destination at a possible minimal cost by taking the distance and other factors such as road and vehicle types into consideration. Readers may further know how to calculate transportation cost manually and find smart heavy goods vehicle types which are environmentally friendly in terms of pollution by gas emissions.

1.3 Limitation of Studies

The biggest drawback of this thesis was the inability to get more information from the company personnel on economic data. Data collection from transport organizations in Ghana was also not sufficient to know accident prone vehicles and pollution vehicles used on the road since owners were not ready to co-operate. Most of the information was also through the internet and phone calls which encountered break-ups, interruption and interferences making delays in getting expected information.

1.4 Literature Sources

The source of information was gathered through the internet from Transportation regulation bodies' journals, websites, mathematics and logistics books. The author also read from other similar international thesis, VIP Company of Ghana management staff and other personnel, Building and Road Research Institute (BRRI), and the Driver and Vehicle Licensing Authority (DVLA) of Ghana.

1.5 Description of the Transportation in Ghana

Kumasi is 251 kilometers from Accra the capital city and 269 kilometers from Tema the industrial city in Ghana. Kumasi is about 254 km2 and a population of about 1.5

million. There are four major types of transportation systems in Ghana namely, Air transport, Sea transport, rail transport and road transport. The transport connection linking Tema to Kumasi is road transport, since there is no sea or rail connection linking these two cities. Goods are normally transported to longer distances in Ghana by heavy duty trucks such as articulated vehicles (tractor and trailer systems).Cargo trains are used to transport goods to destinations where there is a rail link. The rail network is limited to a 1000 km (600 miles) loop by the coast connecting the cities of Accra, Takoradi and Kumasi and several intervening towns. There is also a rail link between the two main ports of Tema and Takoradi. Sea transport is basically carried along the two harbor cities on the Atlantic Ocean, Tema to Takoradi.

Figure 1 shows Route N6 highway from Kumasi to Accra

Figure 2 shows Tema motorway (N1). A link route from Accra to Tema

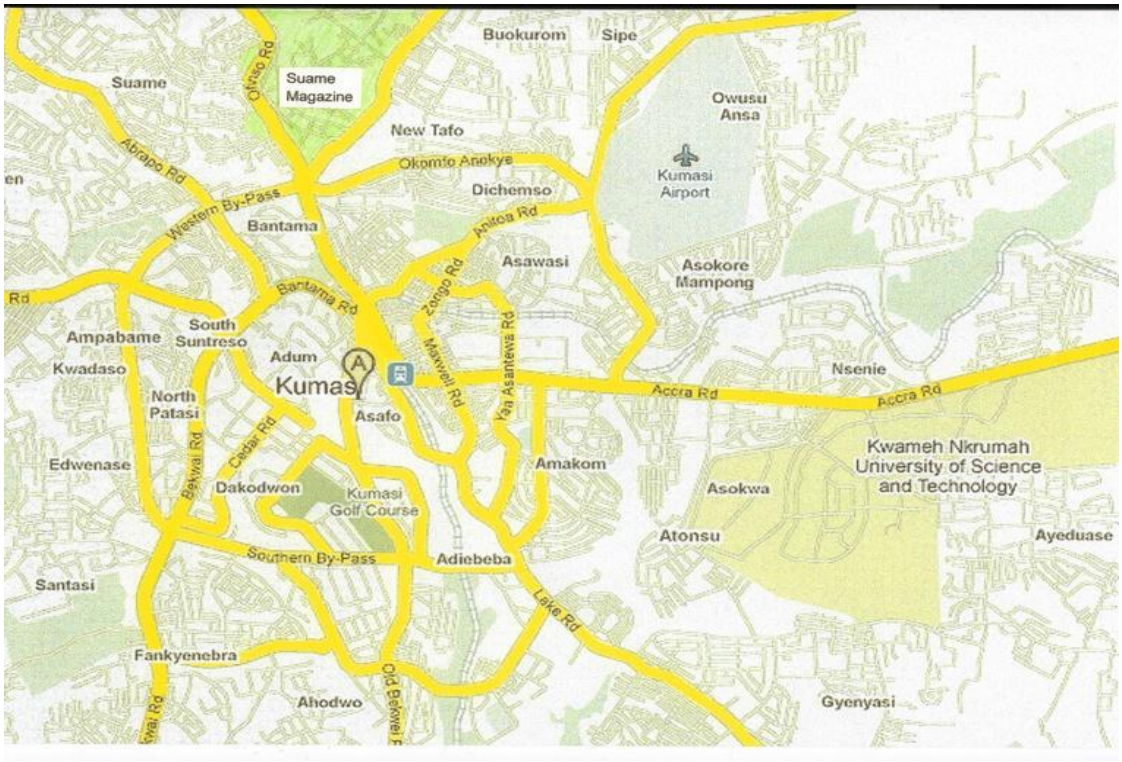

Figure 3 shows a map of Kumasi where VIP Plastics Ltd factory is located.

Figure 4 A map of Ghana showing Kumasi and other cities

1.6 Brief Description of VIP Plastics Ltd

VIP Plastics ltd is a Ghana-based plastic manufacturing, rubber products and chemical processing company located in Chirapatre, Kumasi the second capital city of Ghana in West Africa. Chirapatre is one of the industrial areas in Kumasi. The company manufactures plastic packaging products, household plastic wares, fertilizer sacks in Ghana, plastic extrusion, blow film, PVC foam board, plastic pipes, plastic industrial product, welded plastic product, PVC granules, PVC loaded tarpaulins, PVC petrol tubes, PVC medical tubes, Lead loaded polyethylene, PVC film, LDPE powder, LDPE film, HDPE film, plastic chamber, transparent PVC films, Printed PP bags, Plastic spool products, PVC compound, PP extruded sheet, Plastic bucket, Plastic water tank.

2 LITERATURE REVIEW

Transportation is the process of shipping or moving an item from point A to point B. According to Macmillan dictionary, transportation is the activity of moving people or things from one place to another or the system used for doing this.

Transportation planning on the other hand is the application of planning techniques in the operation, provision and management of facilities and services for any mode of transport to achieve safe, faster, comfortable, convenience, economical and environmentally suitable movement of people or goods.

According to the Centre of Sustainable Transportation's (C.S.T) sustainable transportation is the one that.

- Allows the basic access needs of individuals and societies to meet the safely and in a manner consistent with human and ecosystem, health and with equity within and between generations.
- Is affordable, operates efficiently, offer choice of transport mode, and supports a vibrant economy.
- Limits emission and waste within the planet ability to absorb them, minimizes consumption of non-renewable resources, limits consumption of renewable resources to the sustainable yield level, re-uses and recycles its components, and minimizes the use of land and the production of noise. [1]

2.1 Brief History of Transportation System

In 1781 a French mathematician called Monge formulated a transportation problem. More advances were made during the Second World War by a Russian economist and mathematician called L.Kantorovich. Later the problem was known as Monge-Kantorovich transportation problem. After further research by Kantorovich he published a paper in continuous version of the problem and later together with Gavurin applied a study of the capacitated transportation problem. [2] Many approaches from various scientific disciplines have contributed a lot to address the issue of analyzing problems associated with transportation problems. Some of these disciplines are Operation Research, Economics, Engineering and Geographic Information Science.

Extensively this problem has been explored in the mathematical programming and Engineering literatures. It is referred sometimes to as facility location and allocation problem. It can be modeled as a mixed integer linear programming problem. [3]

Frank Lauren Hitchcock made a presentation of a study entitled ´the distribution of a product from several sources to numeral localities'. This presentation was very useful since it contributed a lot into the solution of transportation problems. [4] Koopmans after studying independently though not related to Hitchcock`s book entitled Optimum Utilization of the Transportation Systems. Transportation methods have been developed from these two contributions involving transporting/shipping materials from sources to destinations. The name Transportation Problem was given since it is applicable in determining how to optimally transport goods. [5]

2.2 Factory Location

The location of the factory is very important when it comes to minimizing cost in transportation. The location of the plants for production or facilities in the factory are also key issues to help the model in reducing cost of transportation and maximizing profit. [6]

According to studies one of the most important strategic decisions made by some companies such as Federal Express (FedEx), Daimler Chrysler and HardRock was where to locate their operations. Location has a major impact on the overall risk and profit of a company since it affects both fixed and variable costs. For instance, depending on the product and type of production transportation alone can take as much as 25% of the product's selling price meaning ¼ of the firm's total revenue may be needed to cover freight expenses of raw materials transported in and finished goods transported out. However other costs that may also influence location decision are taxes, wages, raw material cost and rent. The location strategy is necessary in order to minimize cost, although innovation and creativity may also be critical. [7] One of the major problems facing Ghana is the energy crisis which the Government is doing its best to address the issue.

Kumasi is in Ashanti Region of Ghana and since it is the second capital of the country and also with greater population as well as commercial activities, many industries are

located there. Due to competition in the plastic manufacturing market in Ghana Critical Success Factors need to be considered in choosing a region or community to locate the factory. These factors are classified as follows

Region/Community Decision

- Corporate desires
- Attractiveness of region (culture, taxes, climate, etc.)
- Labor availability, costs, and attitudes towards unions
- Cost and availability of utilities
- Land and construction cost
- Proximity to raw materials

Site Decision

- Site size and cost
- Air, rail, highway, waterway systems
- Zoning restrictions
- Proximity of services/supplies needed

2.3 Factory Layouts

Laying out a factory determines where to put the machines, facilities, equipment and staff in the manufacturing process.

2.3.1 Layout Objectives

The main objective of a layout strategy is to develop an economic layout that will meet the firm's competitive requirements. Layout also determines how materials and other inputs such as people and information flow through the operation. A change in the position of a machine or equipment in a factory can affect the flow of materials considerably which in turn can affect the cost and effectiveness of the overall manufacturing process. A wrong layout may lead to inefficiency, inflexibility, large volumes of inventory, and work in progress, high costs and unhappy customers. To obtain flexibility in layout, managers cross train their workers, maintain their equipment, keep investment low, and place some departments close to each other.

According to research an effective layout can help an organization to achieve a strategy that supports differentiation low cost or response. Benetton, for example, supports a differentiation strategy by heavy investments in warehouse layout that contributes to the fastest, accurate sorting and shipping to its 5,000 outlets. Wal-Mart store layouts support a strategy of low cost, as do its warehouse techniques and layouts. Hallmark's office layouts where many professionals operate with open communication in work cells, supports rapid development of greeting cards. [8]

A good layout design must consider how to achieve the following,

- Higher utilization of space, equipment and people
- Improve flow of information, materials or people
- Improved employee morale and safer working environment.
- Improved customer/client interaction.
- Flexibility or ability to change when necessary.
- Clearly marked routes should be used to identify flow of materials for example with signpost.
- All machines, plant and equipment should have easy accessibility for cleaning and maintenance at all times.
- Supervision and communication should be assisted by the location of staff and communication equipment.

The choice of a layout design may depend on the type of manufacturing process that will be accommodated in terms of variety and volume. At some extreme a factory may produce large varieties in small volumes, each of which is different operation. At another extreme a continuous stream of identical products is processed in large volumes. Between these extremes, the factory may produce various sized batches of a range of different products. [9]

2.3.2 Layout Types

There are different types of layout designs. Some of these are as follows.

- Office layout.
- Retail layout.

- Warehouse layout.
- Fixed position layout.
- Process-oriented layout.
- Work cell layout.
- Product-oriented layout.

But from research it is observed that three of these layouts are commonly in plastic factories depending on the manufacturing process of that factory. These common types are as follows.

- Process-oriented layout.
- Work cell layout.
- Product-oriented layout.

In situation where the manufacturing process demands large variety in low volume of products tends to adopt process-oriented layout. In batch operations with medium variety and volume either a work cell layout or process-oriented layout is desirable. Whereby in cases there is a demand for large volume of products but low variety, a product-oriented layout is suitable. [10] VIP Plastics Ghana Ltd. is producing a low variety of products due to the Ghanaian market demand in plastic products ranging from household wares, medical application, to industrial uses. The factory is hence operating on the product-oriented layout.

2.3.3 Process Oriented Layout

According to research the process oriented layout can handle a large variety of products or services. It is the traditional way to support a product differentiation strategy. In cases where customer orders are of different requirements and specifications, the process- oriented layout is very suitable. Each product undergoes a different sequence of operations. A product is produced by moving it from one department to another in a sequence required for that product. [11]

The greatest advantage of employing this layout is that it is flexible in equipment and labor assignments. The breakdown of one machine does not stop the entire processing of the operation because work can be transferred to other machines in the department.

The only drawback of this layout is that orders take more time to move through the system because of its difficult scheduling, and changing setups. It also requires more skills in the handling of the general purpose equipment therefore increasing capital investment in the training of personnel to handle such equipment. In designing this type of layout the most common tactic is to arrange departments with large flow of materials or people between them close to one another so as to minimize costs. Material handling costs in this approach depends on the following factors.

- The number of loads to be moved between the two departments.
- The distance-related costs of moving loads between the two departments.

Cost in this case is assumed to be a function of distance between departments. The objective can be expressed as.

Minimize cost= $\sum_{i=1}^{n} \sum_{j=1}^{n} X_{ij} C_{ij}$

Where n=total number of departments

i, j= individual department

Xij= number of loads moved from department i to department j

Cij= cost to move a load between department i and department j [12]

Many authors have used different ways of solving layout issues. Some used the Linear Assignment Problem (LAP). In this case any machine can be assigned to location incurring some cost which may vary depending on the location. All locations are used by assigning one machine to each location until the total cost of assignment is minimized.

Another way of improving layout design by some authors is by using the Assignment Method (AM) (Kuhn's Algorithm). This method involves adding/subtracting appropriate values to/from the given cost factors in order to find the lowest appropriate cost for each assignment. Other authors are of the opinion that the Quadratic Assignment Problem (QAP) is the best optimal solution for process oriented layout problems. In this method the cost of an assignment is determined by the distances and the material flows between all given entities but considering the LAP method the cost of assigning a machine to a location do not depend on the location choosing by any other machine. Activity relationship chart is used in the QAP to determine the importance of

placing some machines or departments close to each other so that transportation cost can be minimized and material flow can be improved.

According to research, one Ann Daniel an administrator of Aero maintenance, a small aircraft engine maintenance facility located in Wichita Kansas used the QAP to minimize transportation cost in the company by improving the layout design. She ensured that the eight departments of the facility with the exception of the entrance/office could be moved if layout analysis indicates it's essential. [13]

Aero Maintenance Layout

Entrance/Office 1	Receiving Room 2	Parts Room 3	Metallurgy Room 4
Breakdown Room 5	Assembly Room 6	Inspection Room 7	Test Room 8

Figure 5 shows Aero Maintenance Layout with various departments

Table 1 shows the number of material movement (Loads) between departments in one month.

1	2	3	4	5	6	7	8	
	100	100	0	0	0	0	0	1Entrance/Office
		0	50	20	0	0	0	2 Receiving
			30	30	0	0	0	3 Parts
				20	0	0	20	4 Metallurgy
					20	0	10	5 Breakdown
						30	0	6 Assembly
							0	7 Inspection
								8 Test

She assumed that adjacent departments such as entrance/office (room1) and receiving (room2) have a walking distance of 10 feet. Non adjacent departments the entrance/office and parts (room3) or the entrance /office and inspection (room7) are 20 feet apart and metallurgy (room4) are 30 feet apart. (Hence 10 feet was considered as10 unit cost, 20 feet is 20 unit cost and 30 feet is 30 unit cost.) Given the above information she redesigned Aero Maintenance layout as follows to improve its material flow efficiency.

Total movement = (100×10’) (100×20’)+(50×20’)+(20×10’)+(30×10’)+(30×20’)

(1to2) (1to3) (2to4) (2to5) (3to4) (3to5)

+(20×30’)+(20×10’)+(20×10’)+(10×30’)+(30×10’)

(4to5) (4to8) (6to6) (5to8) (6to7)

= 1000+2000+1000+200+300+600+600+200+200+300+300 = 6700 feet.

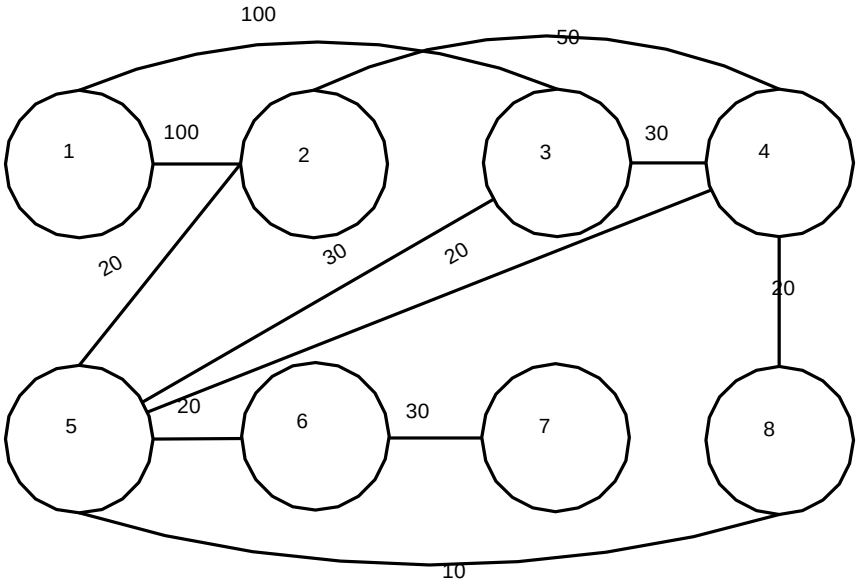

Fig. 6 Current material flow of Aero Maintenance Unit

After carefully studying the current layout of the factory Ann Daniel proposed that some rooms should be interchanged. By switching rooms 3 and 5 and interchanging rooms 4 and 6 and the result were,

Total movement =

(100×10’) +(100×10’)+(50×10’)+(20×10’)+(30×10’)+(30×20’)+(20×10’)+(20×20’)

1to2 1to3 2to4 2to5 3to4 3to5 4to5 4to8

+ (20×10’) + (10×10’) + (30×10’)

5to6 5to8 6to7

=1000+1000+500+200+300+600+200+400+200+100+300 =4800 feet

From this development it is clearly seen that the material flow distance has been reduced by an amount of 1900 feet which is about 28% cost reduction.

The new proposed layout of Aero Maintenance Unit is shown below [14]

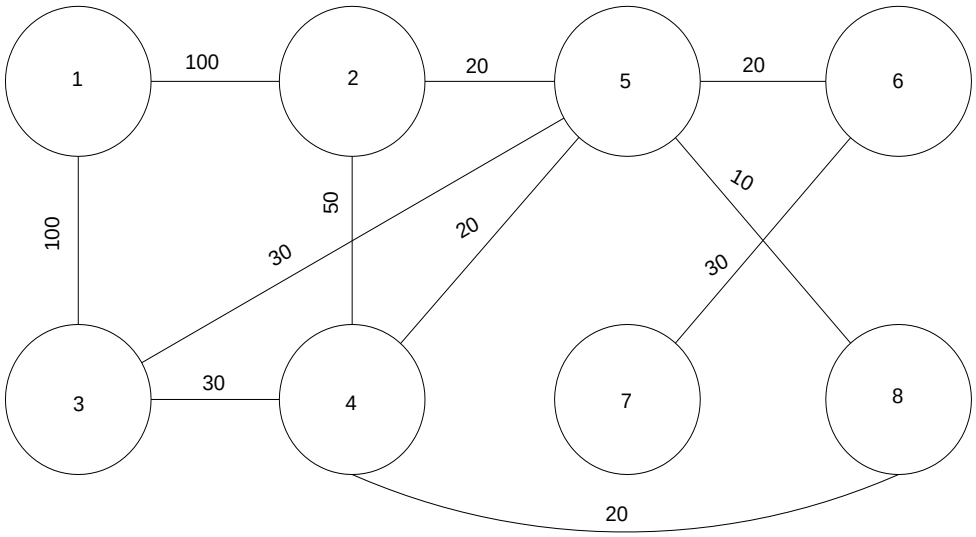

Fig 7 shows an improved material flow of Aero Maintenance Unit

In another development Walters's company management wanted to minimize interdepartmental material handling cost in their six departments. In order to simplify the task they made an assumption that the size of each department is 20 feet by 20 feet and the building is 60 feet long and 40 feet wide.

Table 2 shows number of loads per week between departments in Walters Company

Department	Assembly	Painting	Machine Shop	Receiving	Shipping	Testing
1 Assembly		50	100	0	0	20
2 Painting			30	50	10	0
3Machine Shop				20	0	100
4 Receiving					50	0
5 Shipping						0
6 Testing						

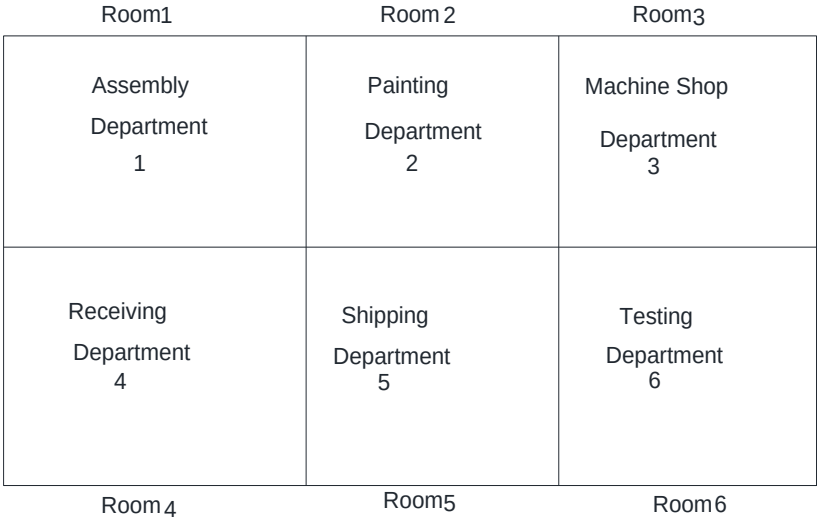

Fig.8 Departmental Layout of Walters' Company

Cost= $\sum_{i=1}^{n} \sum_{j=1}^{n} X_{ij} C_{ij}$

They assumed that the cost of moving load between adjacent departments was $1 and between non adjacent departments is $2. A forklift was used to move the load

Handling cost was calculated as follows. Between departments 1 and 2 is $1×50 loads =50 and between departments 1 and 3 is $2×100 =200 and so on. From the foregone method the result was as follows:

Cost = $50 + $200 + $40 + $30 + $50 + $10 + $40 + $100 + $50

1to2 1to3 1to6 2to3 2to4 2to5 3to4 3to6 4to5

= $570

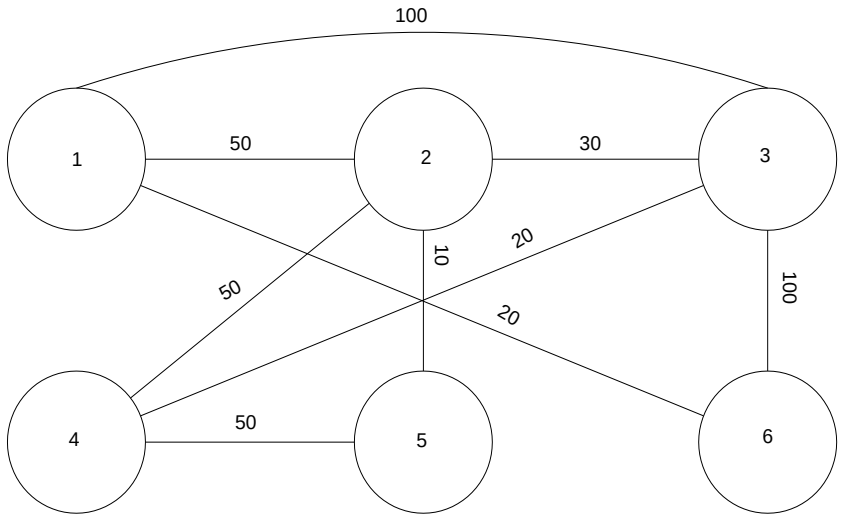

Fig.9 is the Interdepartmental flow graph of Walters Company showing the number of weekly loads.

According to some trial and error methods they arrived by switching departments 1 and 2 which reduced the handling cost to about $480 which was a saving of an amount of $90. [15]

Cost =450 + $100 + $20 + $60 + $50 + $10 + $40 + $100 + $50

1to2 1to3 1to6 2to3 2to4 2to5 3to4 3to6 4to5

= $480

From the point of view it was the best way to reduce the handling cost. Another possibility is to bring department 1 closer to department 3 since their closeness is very important although may probably raise the cost. The figure below shows the new interdepartmental flow graph produced by Walters Company.

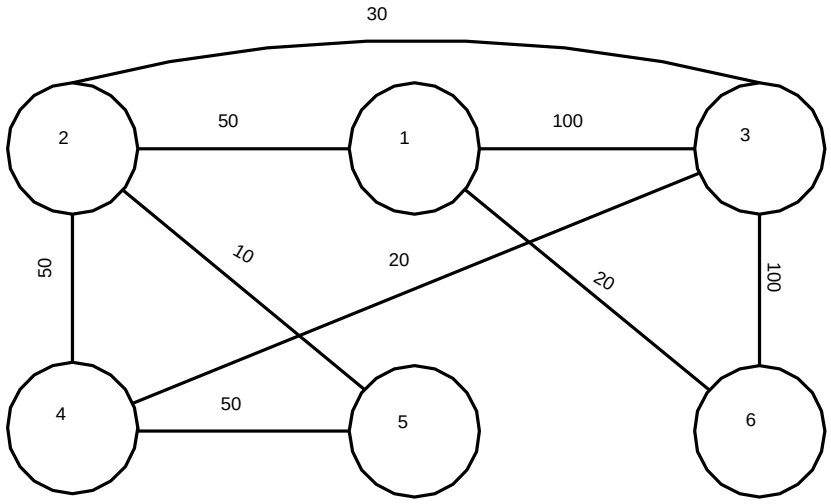

Fig 10 shows improved departmental flow layout of Walters Company

2 Panting Department	1 Assembly Department	3 Machine Shop Department
4 Receiving Department	5 Shipping Department	6 Testing Department

Figure11shows a feasible Layout for Walters Company

2.3.4 Product Oriented Layout

This type of layout is normally organized around products or families of similar high volume, low variety products in repetitive or continuous production. It was observed that VIP Plastics is producing large volume of plastic products of low variety and are standardized in the Ghanaian market. The factory is currently operating the product oriented layout system. Assumptions for such a layout are,

- Volume is adequate for high equipment utilization.

- Stable demand of product for justification of high investment in specialized equipment.
- There is standardization of product.
- Raw materials are supplied adequately.

According to research there are two common types of product oriented layouts and both are repetitive processes. These are fabrication line which builds parts of a product and assembly line which puts parts together to form a product. In any of these cases the line is usually balanced, that is ensuring that time spent on each machine/equipment or work station is the same as the next machine/equipment or work station along the line. Management must therefore ensure that each work station in the production line is performing nearly equal the same task and at the same time getting the desired amount of output. The main advantages of the product-oriented layout are

- Low variable cost per unit
- Material handling cost is reduced
- Supervision is made very easy as well as training personnel
- There is rapid throughput.

On the other hand there are some setbacks as compared to the process-oriented layout. These are as follows

- Large investments is needed to establish the process
- Work stoppage at any one point in the line can tie up the whole operation.
- There is lack of flexibility in handling a variety of products.

2.3.5 Assembly Line Balancing

In order to ensure that there are no delays or imbalance from one work station or process to the other, the lines are usually balanced. This also allows personnel in the various work station to communicate very well. In order to meet the required output, management always gather knowledge of the type of tools, equipment and how each work relate to the other in each work station or personnel used as well as the time taken

for each work station/personnel. Defined tasks are gathered and a data or a form of precedence diagram is drawn to show which task takes place first and which next. [16]

Minzu and Henrioud proposed a kangaroo algorithm to treat the problem of assembly line with a fixed number of work stations. This method aimed of minimizing the maximum work content of these stations which led to a balanced line. [17] Camahal proposed a method for the assembly line balance (ALB) considering both production objectives, cycle time and number of work stations as well as worker physical constraints.[18] Bukchin and Tzur developed a heuristic algorithm to design a flexible assembly line when several equipment alternatives are available. The objective was to reduce the equipment cost by controlling the parameters to determine how many nodes could be skipped off in the tree and reducing the size of the precedence graph [19].

According to one thesis written by Mat, Muhamad and Law at the University of Technology of Malaysia, they used three manual line balancing methods namely Largest Candidate, Kilbridge and Wester (column), Ranked Positional Weights (RPW) and also four generated alternatives to balance a car manufacturing plant. This improved the efficiency and resulted that productivity increased three times the efficiency before the study. [20] In another development Cupta and Dalpati [21] also developed an improved layout for one company with the aim of improving productivity. They identified the problem associated with the existing layout and redesigned it.

2.3.6 An Example of an Assembly Line Balancing

Consider the assembling of a fan by following an operational sequence.

Table 3 shows a precedence diagram for assembling a Fan

	Time(min)	Description	Predecessors
A	2	Assemble frame	None
B	1	Mount Switch	A
C	3.25	Assemble Motor housing	None
D	1.2	Mount Motor housing in frame	A,C
E	0.5	Attach blade	D
F	1	Assemble and attach safety grill	E
G	1	Attach cord	B
H	1.4	Test	F,G

A =None C =None E =D G =B

B =A D =AC F =E H =F, G

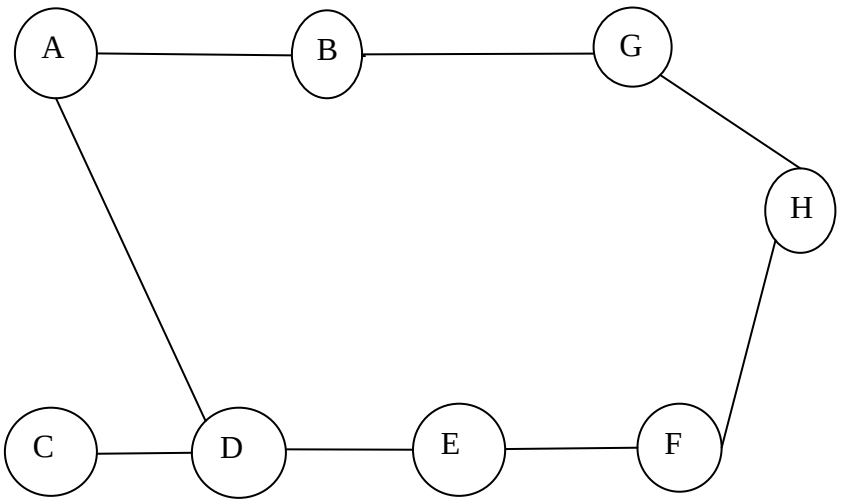

Fig 12a above shows structuring the precedence diagram of the Fan assembly

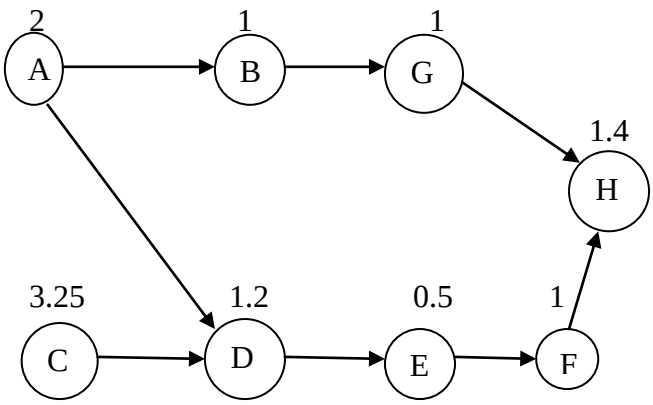

Fig.12b shows structuring the precedence diagram with allocated time.

From the above diagrams the bottleneck of this assembly line is 3.25min and therefore it is necessary to balance the line so that idle time in the line is reduced.

Maximum production = $\frac{\text{Production time /day}}{\text{Bottleneck time /unit}}$

Assuming available time is 7 hours/day = 420 mins

Then max. Prod. = $\frac{420\,\text{min}}{3.25/\text{unit}}$

=129 units

The total task time = 11.35 min

Supposing that the factory is producing 100 fans /day, then the cycle time

$= \frac{420 \text{ min /day}}{100 \text{ units /day}}$

= 4.2 min/unit

The number of work stations necessary to carry out this operation is

$\frac{\text{Sum of task times } (\sum t)}{\text{Cycle time } (CT}$

$\frac{11.35 \text{ min /unit}}{4.2 \text{ min /unit}}$

=2.702 approx. 3 work stations

Efficiency = $\frac{\text{Sum of task time } (\sum t)}{\text{No .of work stations } (N) \text{ x Cycle time } (CT)}$

$= \frac{11.25 \text{ min /unit}}{(3)\ (4.2 \text{ min /uni}}$

= 0.901 ×100

= 90% Therefore balance delay = 1−0.901 = 0.099 [22]

Table 4 shows the Work Stations

STATION 1	STATION 2	STATION 3
C	A,B,D	G,E F,H

The Three work stations so far can be arranged in either a straight line or U-shaped line as shown in the next page.

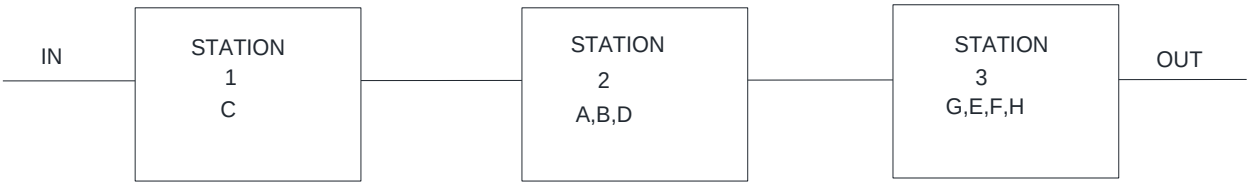

Fig 13a Straight Line Flow

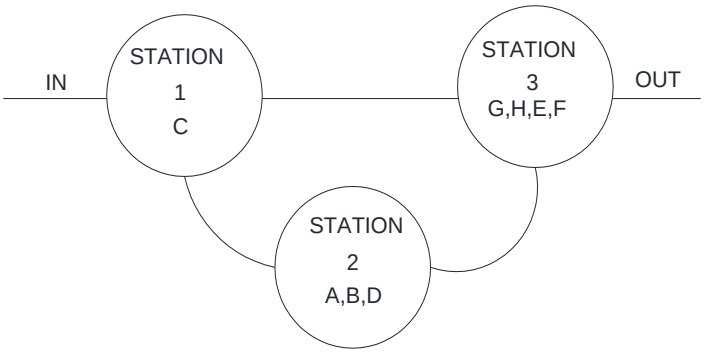

Fig 13b U-shaped Line Flow

Figure 13a and 13b above shows two types of Line Flow arrangements

2.3.7 Data Analysis

Company Profile

Full name

VIP Plastics Ghana limited.

Headquarters:

Ex- GIHOC Industrial Estate, Chirapatre

Status: listed

Legal form: Other Non-liability

Operational Status: Operation

ISIN CODE: GH0000000681

(P.O.BOX AH 8548, Ahensan) Kumasi.

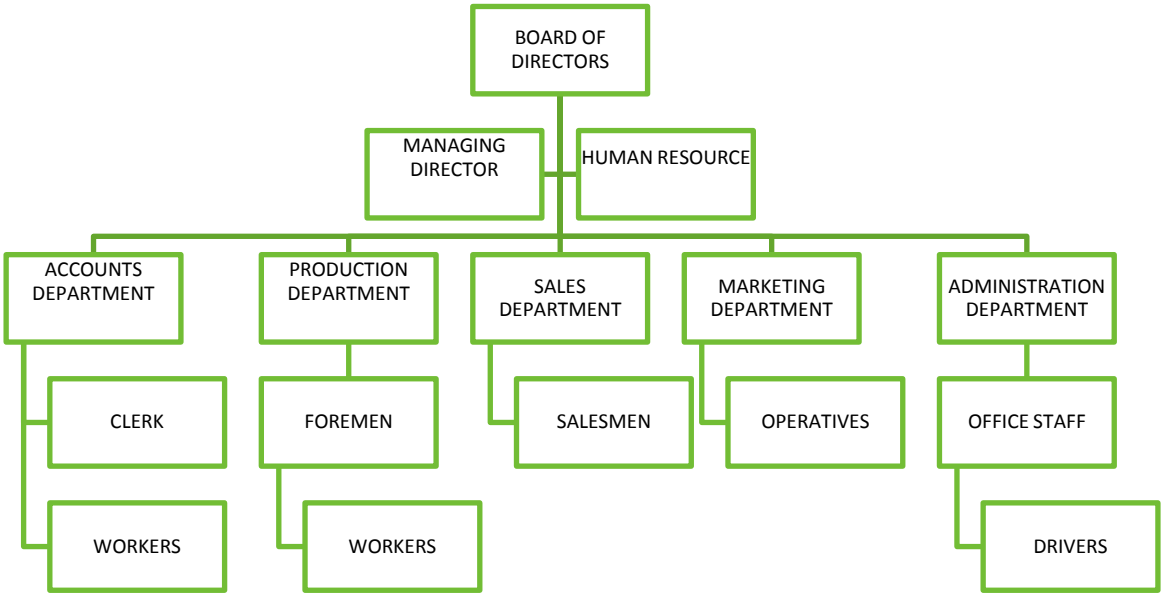

Figure14 Organizational chart of VIP Plastics Ghana Ltd.

VIP Plastics limited Ahensan Kumasi, Ghana

Date established – 1975

Owners – Ghana Industrial Holding Corporation (GIHOC)

Production capacity - 80 units per day

Working hours – 8 hours per day, from 8:00 to 17:00

Working days – Monday - Saturday

Break (Lunch) time – 1 hour, 12:00 – 13:00

Number of employees – 50

Number of truck drivers – 5

Number of trucks – 3

Shifts – 2 only on peak loads (especially in December)

Weekly production – 480 units

Monthly production – 1920 units

Annual production – 22,080 units

Plastic consumption –120 bags per day (1 bag = 10kg)

PROFIT ON SALE PER UNIT PRODUCTION

Plastic tube – GH¢5.00(€1.15)

Plastic bucket – GH¢4.00(€0.92)

Profit

- GH¢ 5 .00(€1.15) per unit of PVC plastic pipe
- GH¢ 4.00(€0.92) per unit of plastic bucket

Labor

- GH¢2.00(€0.46) per unit of PVC plastic pipe
- GH¢1.00(€0.23) per unit of plastic bucket

Conversion of currency was made on 12.5.2015 by XE Currency converter

Calculation

23,040 units per year, 2 weeks break for Christmas and 4 days break for Easter.

23,040-960

= 22,080 units.

EQUIPMENT

2 Injection molding machines

20 Molds

1 Extrusion machine/Extruders

1 New data set machine under Hire purchased.

PREMISES – Rented

Floor area = 210 feet x 150 feet

Equipment area = 120 feet x 90 feet

Space for each equipment/workstation = 40 feet x 40 feet

Distance between adjacent departments = 3 m

Distance between non adjacent departments = 6 m

VIP PLASTICS, AHENSAN-KUMASI FLOOR LAYOUT PLAN

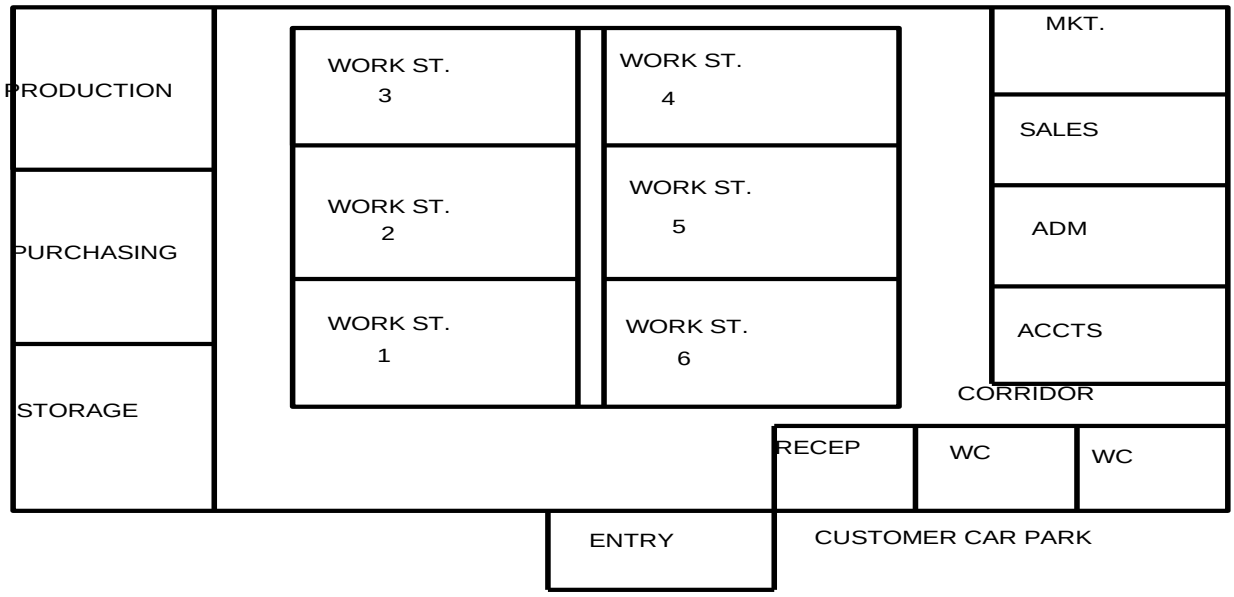

Figure 15 above shows VIP Plastics Ltd floor layout

2.4 Road Accidents in Ghana

It is estimated that the population of Ghana stands at 24 million. According to data from the Driver and Vehicle Licensing Authority (DVLA) of Ghana there are over 1,030,000 vehicles applying the various road networks in Ghana. Besides, the registered vehicles in Ghana, other vehicles from the neighboring Burkina Faso and Mali also move in and out due to the ports in Ghana.

The National Road Safety Commission of Ghana (NRSC) has identified over twenty causes of road accidents in Ghana which includes unnecessary speeding, lack of proper judgment of drivers, inadequate experience, carelessness, wrong overtaking, recklessness, intoxication and many others. Other factors are inadequate enforcement of traffic laws and regulations. Between the years 2002 to 2008 about 13,166 people were killed in road accidents in Ghana. 42% were pedestrians, 23% were passengers in busses, and 12% were car occupants, while the remaining 23% consisted of passengers on riding motor bikes and bicycles as well as occupants in heavy goods vehicles.

In 2013 the Motor Traffic and Transport Unit (MTTU) of Ghana reported that 2,330 Ghanaians died in road accidents alone with 13,572 being recorded. As a result there is an average loss of 1.6% GDP every year to road accidents. [23]

2.5 Sustainable Transportation

The main transport mode of land logistics are railway transport and road transport. The railway transport has the advantage of carrying large capacities of goods, lower energy consumption and little influence on bad weather conditions. The drawback of rail transport in Ghana is the high cost of its facilities and maintenance as well as time consuming and therefore most of the rail lines are closed. On the other hand road freight transport has the advantage of cheaper to invest, more reliable, easy to access, very mobile and available at all times. The demerit of road transport is its low capacity to carry loads as compared to the rail type and also less safe as well as slower in speed. In situations where road transport is utilized must also bring in more traffic jams, environmental pollution and traffic crashes. There is therefore a need in the future to develop good transport policies in this sector.

Express Delivery. The need to reduce stock cost due to the increase demand of time accuracy in the production process of a factory calls for Just-In-Time delivery principle. This involves more frequent delivery of goods at the factory at the time when needed. Some of the features of Express delivery are

- Door-to-door service
- Efficiency
- Just in time (JIT)
- Easy to trace

According to some research in Europe some of the cities have implemented the limitation of load factors when it comes to urban freight transport. The companies allowed to transport goods to urban areas must have high loading rules and moreover the truck has to conform to the environmental standards. This is achieved by issuing some special certificate to these companies to have the right and also use a particular transport infrastructure in the urban areas. This intends will reduce the complexity of urban transport.

Intelligent Transport Service (ITS).Intelligent Transport Service is applied in many transport systems. This includes the application of Global Positioning System (GPS), Geographic Information System (GIS) and other advanced information systems. The application of GPS provides positioning of the vehicles. This can help the control centers to monitor and dispatch trucks. GIS provides the basic geographic database for some operators to organize their routes very easy and faster. Advanced information systems equip managers and operators to adjust their paths whenever new demands occur. The combination of these systems provides a high maneuverability of transport systems. [24]

2.6 Environmental Pollution

Heavy Duty Vehicles (HDV) represent about ¼ of emitting CO_2 gas in EU road transport. Although some improvement have been made in the efficiency of its fuel consumption recently. They are still emitting CO_2 in increase rate, probably due to the increasing road freight demand. There is therefore a need to address this situation of HDV CO_2 emissions both in passenger and goods vehicle transportation systems. In accordance with the EU plans for sustainable and smart growth as well as transition to a resource efficient and vibrant economy, decarbonizing transport and energy efficiency has been at their heart. [25]

Heavy Duty Vehicles (HDV) has been the major source of transporting goods in Ghana as well as many other African countries. Owing to the increase number of imported old Heavy Duty Vehicles (HDV) to Ghana and other West African countries with limited use of emission control technologies, they are one of the biggest sources of air pollution and represent about half in air pollution in West Africa as compared to that of Europe. Without strict measures and emission standards the adverse impact of Heavy Duty Vehicles (HDV) use in the environment of Ghana will continue to deteriorate and unbearable making human life dangerous. The African Sustainable Transport Forum held a meeting in October 2014 in Kenya to focus on a policy framework for sustainable transport roadmap for Africa.

2.7 Addressing CO_2 Emission from Heavy Duty Vehicles

With the roadmap for moving to a low-carbon in 2050, the EU sets out its plan to meet the long term target of reducing greenhouse emissions in different sectors by 2050. Also the commission's white paper on transport 2011 described a pathway to increase the sustainability of the transport system with technological innovation enabling to transition to a more efficient and sustainable European transport system. As part of their strategy to address HDV fuel consumption, and CO_2 emissions some factors were considered

- Improved vehicle efficiency through new engines, materials and design
- Cleaner energy usages through new fuel and propulsion systems
- The uses of network and more efficient fleet operation with the support of information and communication system.

A number of studies were commissioned as first step to this strategy. These includes methodology for CO_2 emission measurement for Heavy Duty Vehicles taking into account not only the engine but the entire system, i.e. engine, truck driving resistance, aerodynamic and measuring all relevant contributions to CO_2.[26]
The Environmental Pollution Agency of Ghana has set emission standards in the use of Heavy Duty Vehicles (HDV) and also drawn some policy interventions to control emission in the country. The policy includes,

- The restriction of importation of old vehicles into the country.
- The phasing out of leaded fuel.
- The regulating of oil companies to import high quality fuel.
- The procuring crude oil with low sulphur content.

Table 5 shows emissions standards in Ghana from the year 2000-2005

VEHICLE.	FUEL	CO_2 (g/km)	CH_4 (g/km)	N_2O (g/km)	NO_X (g/km)	VOC (g/km)	CO (g/km)	PM (g/km)
Passenger	Gasoline	318.14	0.02	0.03	1.62	1.02	2.14	0.00
Passenger	Diesel	313.44	0.00	0.03	0.79	0.36	0.73	0.23
Light Duty	Petrol	318.14	0.03	0.03	1.67	1.01	2.66	0.00
Light Duty	Diesel	313.44	0.00	0.02	1.03	0.38	0.84	0.26
Heavy Duty	Diesel	313.44	0.03	0.03	0.94	0.46	0.71	0.08

3.0 METHODOLOGY

Introduction

This chapter deals with a detailed description of the method found from the research and used to solve the problem related to the transportation and facility management for VIP plastics Ghana limited. Due to problems related to communication with the personnel in VIP Plastics Ghana Ltd, the author found it necessary to finally make a trip visit to the factory premises in Ghana. A close looks of how facilities and equipment were laid in the factory as well as the arrangements of all the various departments and work stations. The author then met the personnel and gathered some data and information about the facility. These data and information were used to carry out some calculations and based on those information appropriate solutions and suggestions were deduced.

3.1 Factory Layout

The table below shows the current factory layout of VIP Plastics Ltd. There are 6 main departments in the facility with 6 work stations in the production department. Different products are processed in these work stations in a single piece assembly line.

1 Entrance/Offices	2 Storage	3 Production
4 Inspection	5 Packaging	6 Shipping

Figure 16 shows the current layout of VIP Plastics showing movement of material

Movement of load or material from one department to the other is carried out by using wheelbarrows and trolleys

Table 6 below shows Interdepartmental flow chart of VIP Plastics Ltd.

Movement of Load per week

1	2	3	4	5	6	
	150	100	0	0	150	1 Entrance/Office
		120	0	80	0	2 Storage
			80	0	0	3 Production
				65	0	4 Inspection
					50	5 Packaging
						6 Shipping

3.2 Calculations

From the current layout of VIP Plastics company Ghana Ltd. The cost of moving load from one department to the other is calculated as follows.

Distance between adjacent departments = 3m

Distance between non-adjacent departments = 6m

Cost of moving load through a distance of 1m = GH¢1.00(€0.23)

Cost as a function of distance between departments is expressed as

Cost = $\sum_{i=1}^{n}\sum_{j=1}^{n} X_{ij} C_{ij}$

Where,

n = total number of departments

i, j = individual departments

Xij = number of loads moved from department i to department j

Cij = cost to move a load between departments i and j

Cost = (150x3) + (100x6) + (120x3) + (80x6) + (80x3) + (65x3) + (150x6) + (50x3)

= 450+600+360+480+240+195+900+150

= 3,375= GH¢3, 375.00 (€772.88) currency conversion by XE Currency converter on 12.5.2015

3.3 Finding the Minimum Cost by Switching Departments

Table 7 shows the switching over of Departments in VIP Plastics Ltd.

SWITCHING OVER	DEPARTMENTS			RESULTS
1 and 2	2	1	3	2,985.00
	4	5	6	
1 and 3	3	2	1	**2,685.00**
	4	5	6	
1 and 4	4	2	3	3,375.00
	1	5	6	
1 and 5	5	2	3	2,775.00
	4	1	6	
1 and 6	6	2	3	3,075.00
	4	5	1	
2 and 3	1	3	2	3,285.00
	4	5	6	
2 and 4	1	4	3	3,795.00
	2	5	6	
2 and 5	1	5	3	3,375.00
	4	2	6	
2 and 6	1	6	3	3,375.00
	4	5	2	
3 and 4	1	2	4	3,075.00
	3	5	6	
3 and 5	1	2	5	3,030.00
	4	3	6	
3 and 6	1	2	6	3,375.00
	4	5	3	
4 and 5	1	2	3	3,285.00
	5	4	6	

4 and 6	1	2	3	**2,685.00**
	6	5	4	
5 and 6	1	2	3	3,120.00
	4	6	5	

3.4 Optimization for Maximum Profit on VIP Plastics ltd. main Products

There are two main products produced daily by VIP plastics manufacturing company and all other products are only produced on order and demand by some customers. These two main products are PVC plastic pipes and plastic buckets. According to the data collected from the company the daily production is 80 units per day. The calculation below shows how maximum profit can be achieved by these two products to meet the demand and production capacity of the company.

Production capacity = 80 units per day

Number of materials used = 120 bags per day

Profit

- GH¢.5 .00(€1.15) per unit of PVC plastic pipe
- GH¢.4.00(€0.92) per unit of plastic bucket

Labor

- GH¢.2.00(€0.46) per unit of PVC plastic pipe
- GH¢.1.00(€0.23) per unit of plastic bucket

$P_{max} = 5x+4y$ objective function

Where $x \geq 0$ and $y \geq 0$

$x+y \geq 80$

$x+y \geq 120$

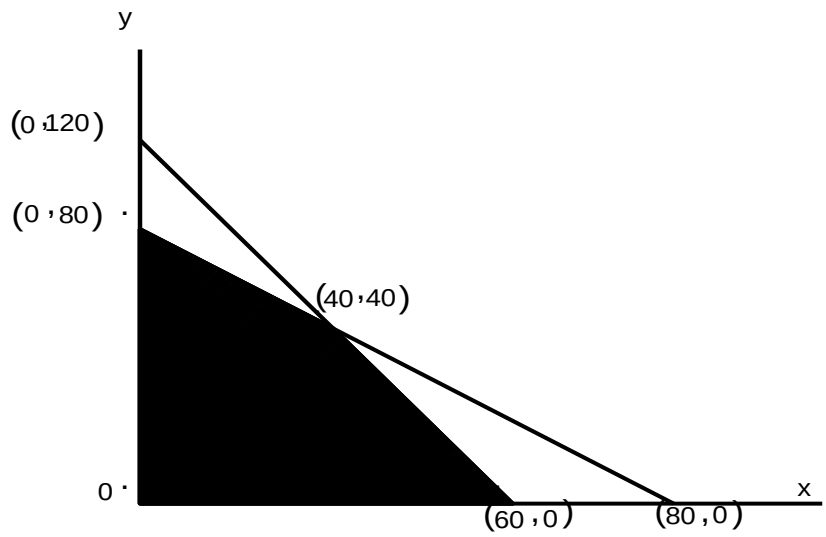

Fig 17 above is a graph of inequalities for Optimizing VIP Plastics Ltd

Let x = 0

2x +y =120

2(0) +y = 120

y =120

Let y = 0

2x + 0 = 120

x= 60

x + y = 80------eq.1

2x + y = 120----eq.2

By subtracting equation 1 from equation 2

2x +y =120

x + y = 80

x = 40

By putting x = 40 into any of the equations

y = 40

Pmax. = 5x + 4y

By considering the values in the vertices

(0, 80) ---- 5(0) +4(80)

0 + 320 = GH¢320.00(€73.28)

(40, 40) -----5(40) + 4(40)

200 + 160 = GH¢360.00(€82.44)

(60, 0) ----5(60) +4(0)

300 + 0 = GH¢300.00(€68.70)

From this calculation it is found that by manufacturing 40 units of PVC plastic pipes and 40 units of plastic buckets the company can maximize its profit on daily basis to meet the demand and materials available.

3.5 Balancing VIP Plastics Ltd. Production line

Working hours per day = 88 hours = 480 minutes

Break time/Lunch = 1 hour = 60 minutes

Preparation time before work = 15 minutes

Clean-up time after work = 15 minutes

Actual working hours = 480 minutes – 90 minutes

= 390 minutes

Production per day = 80 units

Cycle Time (CT) = $\frac{390}{80}$

4.875 minutes

Table 8 Precedence chart for VIP Plastics Production process

Element	Time(min)	Description	Predecessors
A	2	Entry	None
B	2.5	Storage	A
C	4.5	Production	A,B
D	2	Inspection	C
E	2.6	Packaging	D
F	2.5	Receiving	E
G	2.2	Shipping	F

Total Task time = 18.3 minutes

Cycle time = 4.875 minutes

Therefore number of work stations = $\frac{18.3}{4.875}$

= 3.75 ~ 4

There should be 4 work stations to produce the required output within the actual working hours

Efficiency = Sum of task times/Cycle time×Actual number of work stations

= $\frac{18.3}{4.875 \times 4}$

= 0.938

0.938×100 = 94%Balance delay = 1 – 0.938= 0.062

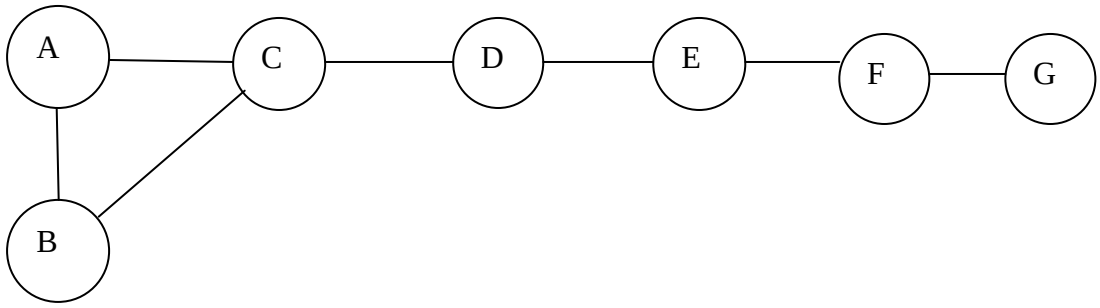

Fig.18 Structured Precedence diagram of VIP Plastics Ltd. production process

4 FINDINGS

The allocation of departments in a facility and the distance between departments enhances material movement and also contributes to cost.VIP Plastics Ltd current facility layout has some departments in wrong location and therefore does not allow the free flow of material and personnel. The movement of material across these departments has increased cost in the production line because after switching departments 4 and 6 it is found that cost has been reduced 20.4% as compared to the current layout. The current number of workstations in VIP Plastics is six and causes more idle time in some workstations. This is not well balanced, adding to production cost and waste of personnel.

According to the emission standards in Ghana from the research it is realized that diesel engines and for this matter Heavy Duty Vehicles produce a lot of Particulate Matter and other harmful gases to the environment making it less friendly. The type of vehicles currently used by VIP Plastics to transport raw materials is posing threat to the environment.

4.1 Results

The objectives of the project have been met in the sense that cost has been reduced and profit has been maximized. The current layout has been improved by re- allocating some departments. After switching over the various departments to calculate for cost it was realized that switching some departments increase the transportation cost whereby others reduce the cost. Maximum profit with respect to the two main products has been optimized to know exactly the quantity of each product needed to be produced in a day to meet the demand and production capacity of the company.

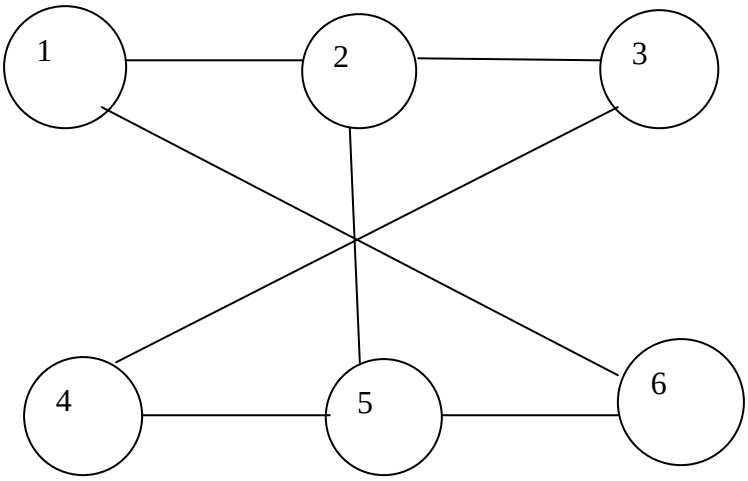

Figure 19 shows movement of load in current VIP Plastics Ltd. layout

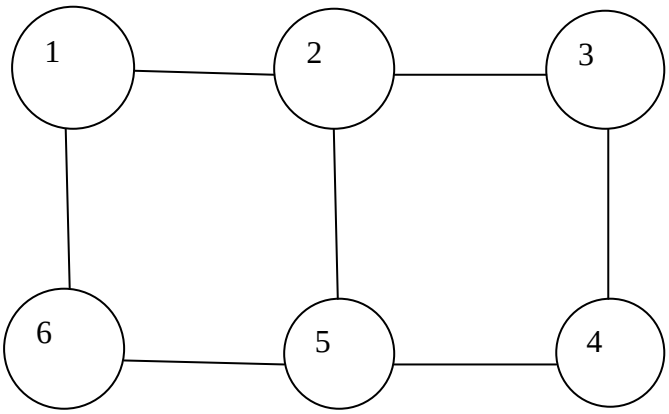

Fig.20 shows an improved Layout of VIP Plastics Ltd when departments 4 and 6 are switched over

It can be seen that the departments Shipping and Entrance are now closer than before to decrease the distance for material flow. This reduces cost and maximizes profit.

By switching departments1 and 3 or 4 and 6, there is a cost reduction of 20.4 % of the cost of the current layout

Current layout = GH¢. 3,375.00(€772.88)

Switching 4 and 6 or 1 and 3 = GH¢.2, 685.00(€614.87)

Therefore 3,375 -2,685

= GH¢690.00(€158.01)

On the other hand the production line was balanced and efficiency in the system was calculated to be approximately 94% which was quite good. There was a balance delay of 6%.

5.0 CONCLUSION AND RECOMMENDATION

The author recommends that the departments 4 and 6 can be switched over to reduce the transportation cost. Moreover that arrangement enhances the free flow of material as compared to the current layout of the facility.

It is further proposed for VIP Plastics Ltd. to use electric vehicles to transport materials from the source to the factory and out of the factory since they are environmentally friendly. These vehicles give zero emissions. Further studies can be made on these electric vehicles in terms of their usage in Ghana with respect to Ghana road network and the environment.

Moreover, VIP Plastics Ghana Limited management should employ lean manufacturing system so that waste which does not add value to the production can easily be eliminated.

REFERENCES

1 Princeton, L Schiller, Eric, C Bruun and Jeffrey, R Kenworthy (2010). Introduction www.mefirighana.com.to Sustainable Transportation Policy, Planning and Implementation (ch.1 p.2) Earthscan

2 Vershik, AM (2013) Long History of Monge-Kantorovich Transportation Problem. (ch.1) Springer online published (2013)

3 Dantzig, GB (1993) Linear Programming and Extensions.(ch.1) Princeton University Press

4 Hitchcock, F (1941) Distribution of a product from several sources to numerous localities- Journal of Math and Physics pp-224-230.Date accessed 5.6.2013

5 Rao, S.S (2009) Engineering Optimization theory and Practice, 4th edition (p-221) John Willey and Sons.

6 Gavriel, S (2001) Handbook of Industrial Engineering Technology and Operations Management.3rd edition (ch.3 p11) John Willey and Sons

7 Hazer, J and Render, B Operations Management 8th edition (ch.8 pp 312-313) Pearson Prentice Hall

8 Hazer, J and Render, B: Operations Management 8th edition (ch.9 p 342) Pearson Prentice Hall

9 Apple, JM (1977) Plant Layout and Materials Handling 3rd edition (p-112) John Willey and Sons

10 Schenk, M (2010) Factory Planning Manual (p-115) Springer

11 Dileep R, Sule (2008) Manufacturing Facilities 3rd edition (p-.132) CRS Press

12 Hazer, J and Render, B. Operations Management 8th edition (p-.350) Pearson Prentice Hall

13 Hazer, J and Render, B. Operations Management 8th edition (ch.9 pp364) Pearson Prentice Hall

14 Hazer, J and Render, B. Operations Management 8th edition(ch.9 pp367) Pearson Prentice Hall

15 Hazer, J and Render, B. Operations Management 8th edition (ch.9 pp351) Pearson Prentice Hall

16 Hazer, J and Render, B Operations Management 8th edition (ch.9 pp 361) Pearson Prentice Hall

17 Minzu, V Henrioud (1997) Assignment Stochastic Algorithm in Multi-Product assembly line in proceedings of the 1997 International Symposium on Assembly and Task Planning (ISATP97) (pp-109-114),Marina del Reg. California

18 Camahan, B.J (1999) Incorporating Physical demand criteria into assembly line balancing- Pittsburg University internal report. Date accessed 3.06.2013

19 Bukchlin, J Tzur, M(2000) design of flexible assembly line to minimize equipment cost(pp-585-.598) Institute of Industrial Engineers Transaction Volume 32

20 Mat Muhamad et al (2002) Work improvement at a car manufacturing company- International thesis- Date accessed 12.12.2013

21 Gupta, R.C et al (2012) Implementation of assembly line balancing in a labor intensive manufacturing unit- Journal on National conference on emerging challenges for sustainable business. Date accessed 10.01.2014

22 Suryawanshi, H.V (2010) Line Balancing. Harshad_S Publications. Date accessed 18.03.2014

23 NRSC (2011). Road Accidents and Safety measures in Ghana. www.mefirighana.com. Date accessed 24.3.2014

24 Tumin, J (2012) Sustainable Transportation Planning. p12, John Wiley and Sons, In Hobokon, New Jersey

25 E.C (2011) Climate Action, www.ec.europa.eu/clima/policies/transport/vehicles. Accessed on 19.12.2013

26 European Union Environmental Policy after 'The Nice Summit from the Journal Environmental Politics' (2001) Vol.10 No 4, pp 109-114. Frank Cass Publishers www.ec.europa.eu/environment Date accessed 17.09.2013