WQ-truss design according to Russian and European Standards

HAMK
UNIVERSITY OF APPLIED SCIENCES

Bachelor's thesis

Construction engineering

Visamäki, Spring 2015

Maria Solodovnikova

HAMK
UNIVERSITY OF APPLIED SCIENCES

ABSTRACT

Unit	Visämäki
Degree Programme	Construction Engineering
Option	Steel design

Author	Maria Solodovnikova	**Year**	2015

Subject of Bachelor's thesis	WQ-truss design according to Russian and European standards

The purpose of this Bachelor's thesis was to compare the Russian and European norms for the design of a new solution, called WQ-truss system. The aim was to provide detailed information about the Russian and European Standards and design methods to make things clear for foreign designers. The study was conducted using the latest versions of the Russian Standards and Eurocodes.

In addition, the main idea was to show the advantages of the WQ-truss and the calculation methods of the system based on the Russian and European Standards. This article did not cover joint design which can be developed and researched in the future.

The comparison was based on the results of the calculations which were performed using Autodesk Robot Professional. The capacity usage ratios were compared. It was concluded that design according to Eurocodes allows using plastic capacity of steel, uses different safety factors and methods in general. This fact is influenced results in general.

Literature concerning the Russian and European norms helped to implement the research. Also, information about WQ-truss from websites of manufacturers was used.

Keywords WQ-truss, Russian standard, SNiP

Pages 72p. + appendices 0 p.

FOREWORD

This Bachelor's thesis was written in order to sum up the results of studying for a Bachelor's degree in the Degree Programme in Construction engineering at Häme University of Applied Sciences and was inspired by Pöyry Oy.

The topic, WQ-truss design according to Russian and European standards, was selected by Pöyry Oy in purpose to develop Russian projects and also introduce new solutions in the design process. I would like to express my gratitude to this company for funding this project.

I would like to thank my supervisor Aleksi Pöyhönen for providing initial data and for all comments and valuable advices during the thesis writing process. The literature and practical information gave a fundamental understanding of such a modern solution as the WQ-truss system. Additionally, I am grateful for explaining the basis of calculation methods according to Russian standards.

Besides that, I am thankful to the university supervisor Jarmo Havula, who has been my teacher for four years. I learned plenty of practical things in his lessons and gained a lot of knowledge about the design process and tools.

In general, I want to express my gratitude to all teachers of the Häme University of Applied Sciences for all experience and great educational process.

Finally, I would like to thank my colleagues in Pöyry Oy for advising and for help provided during the research, when assistance was needed.

In Vantaa 30.04.2015

Maria Solodovnikova

CONTENTS

1 INTRODUCTION 1

2 MANUFACTURING 3

2.1 WQ-truss 3
2.2 Typical dimensions of WQ-beam 4

3 APPLICATION AREAS AND LOADS 5

3.1 Hollow core slabs 6
3.2 Special design problems 7

4 HOLLOW CORE SLAB FAILURE 8

4.1 Test arrangements 8
4.2 Loading 9
4.3 Test results 11

5 JOINTS 12

5.1 Concrete columns 12
5.2 Steel columns 12
5.3 Joint between hollow core slabs and WQ-beam 13
5.4 Connection between WQ-beam and secondary beams 14

6 EUROCODES AND SNIP 15

6.1 Russian norms and general information about SNiP 15
6.1.1 History 15
6.1.2 Classification and chapters 15
6.2 SNiP and Eurocodes 16
6.3 Calculations according to SP, SNiP and Eurocodes 16

7 DESIGN OF WQ-TRUSS ACCORDING TO RUSSIAN STANDARDS 18

7.1 Structural analysis 18
7.2 Initial imperfections and second order effects 18
7.3 Modeling 18
7.4 Fundamental components of member resistance 19

8 LOAD DETERMINATION 20

8.1 Load classification 20
8.2 Load combinations 21

9 SAFETY FACTORS 22

9.1 Material safety factor 22
9.2 Consequence and reliability factors 22
9.3 Coefficient for working conditions 23
9.4 Safety factor for ultimate resistances 23
9.5 Coefficient depending on loading type 23

10 SNOW LOADS 24

10.1 Shape coefficient 24
10.1.1 Characteristic snow load 25

11 WIND LOAD 29

12 DESIGN CONSIDERATIONS, FIRST LIMIT STATE 33

12.1 Web stability check 33
12.1.1 Web local resistance 33
12.2 Normal forces 34
12.3 Bending moment resistance 35
12.4 Shear design 35
12.5 Complex stress of bottom flange 35
12.6 Combined bending, shear and axial force 35
12.7 Torsion 35
12.8 Member stability check of WQ-truss 36
12.8.1 Flange local resistance 36
12.9 Lateral-torsional buckling 36

13 DEFLECTION LIMITS, SECOND LIMIT STATE 37

14 DESIGN ACCORDING TO EUROPEAN STANDARDS 38

14.1 Global frame analysis methods 38
14.2 Elastic versus plastic analysis types 39
14.3 Modeling 40

15 LOAD DETERMINATION 42

15.1 Load combinations 42
15.1.1 Eurocodes 42

16 SAFETY FACTORS 44

17 SNOW LOAD DETERMINATION PROCESS 45

18 WIND LOAD 48

18.1 Wind force 48
18.2 Wind external and internal pressure 49

19 CROSS SECTION CLASSIFICATION 50

19.1 WQ-beam cross section check 51

20 DESIGN CONSIDERATIONS, ULTIMATE LIMIT STATE 53

20.1 Cross section resistance 53
20.1.1 Tension and compression 53
20.1.2 Bending moment 54
20.1.3 Shear strength 55
20.1.4 Combined bending and axial force 57
20.1.5 Combined bending, shear and axial force 57
20.2 Member stability check 57
20.2.1 Buckling resistance of members in compression 57

20.2.2 Member check in bending and axial compression in different directions 58

21 DESIGN CONSIDERATIONS, SERVICEABILITY LIMIT STATE 60

22 COMPARISON 61

22.1 Calculation methods 61
22.2 General dimensions 61
22.3 Conditions 62
22.4 Stresses 63
22.4.1 Eurocodes, Ultimate limit state 63
22.4.2 Eurocodes, serviceability limit state 64
22.4.3 Russian standard, ultimate limit state (first limit state) 64
22.4.4 Russian standard, serviceability limit state (second limit state) 65
22.5 Resistances 65
22.5.1 Capacity usage ratios 68
22.6 Results 68

23 CONCLUSIONS 70

24 SOURCES 71

1 INTRODUCTION

Construction industry is one of the most significant and profitable in the world. This factor inspires people to create more convenient and effective solutions. One of them is WQ-beam which is the object of study in this thesis – WQ truss system. This system originates from Finland and expands the boundaries for designers and for construction industry. The system allows specialists to use longer spans without an excessive consumption of materials. It works with hollow core or shell slabs resting on the WQ-profile, which functions as an upper chord of the truss. Usually, hollow sections are chosen for bracings and a steel plate acts as a bottom chord. The system is depicted below in the Figure 1.

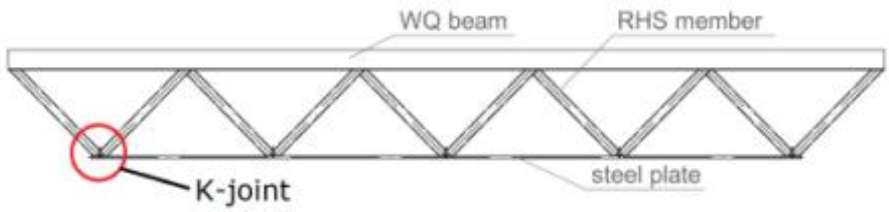

Figure 1 WQ-truss system (Kadak Jaak, Thesis, Effect of steel strength on the welded joint between a plate and two tubular cross-sections,2014)

There are two variants of WQ-beam: edge and center beam, which can be seen on the Figure 2 below. In this thesis it will be more informative to focus only on the center beam, which is the most common one.

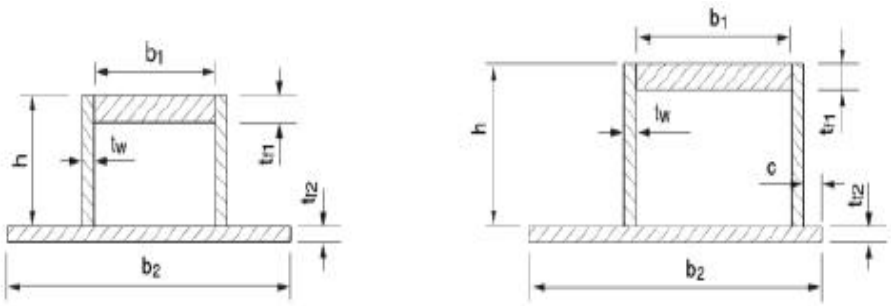

Figure 2 Cross section types of WQ-profile, center profile and edge profile (Kadak Jaak, Thesis, Effect of steel strength on the welded joint between a plate and two tubular cross-sections,2014)

In fact, the majority of construction companies in Finland desire to develop their business in the Russian Federation and the other way round, but designers face a problem of difference in the calculation process and dissimilarities in standards in general. This thesis is written in purpose to help specialists to use the Russian and European norms. It will also make it easier for designers to apply this knowledge for WQ-truss analysis and reveal all the advantages of the solution. In the article calculation methods and key problems will be highlighted during the design of WQ-truss according to Russian and European building codes. The last objective of this research is to analyze a truss with Autodesk Robot Structural Analysis Professional software, where the main differences in the Russian and Europe-

an norms will be detected. This program allows performing structural analysis taking into consideration safety factors and methods of each standard. It is sensible to compare element dimensions, resistances and point out the main differences in the results.

The basic information in this thesis is taken from the Russian and European building codes. In addition publications on these normative documents were utilized to give a more precise description of problems.

2 MANUFACTURING

2.1 WQ-truss

A truss is a system of bars which are interconnected in nodes and form a geometrically unchangeable structure. All members take only axial forces, thus metal in trusses is used more efficiently and material consumption is more economical. Besides that, decreasing the weight of the material leads to smaller forces acting on foundation and other elements as well as less powerful equipment on a construction site. But manufacturing process of a truss is more time-consuming because of increased number of parts.

Steel trusses are used in many areas, especially in industrial and civil design. A typical truss consists of an upper chord which mainly carries the compression force and a bottom chord which takes tension and bracing members. As for WQ-truss, the upper chord is represented by a WQ-beam. This solution is quite a modern one, which resists large loads especially because of WQ-profile. This framing system is popular due to prefabricated elements and a small amount of wet work on a construction site. Figure 3 below illustrates an example of WQ-truss system.

Figure 3 WQ-truss in Lappeenranta (http://www.ruukki.com/News-and-events/News-archive/2014/Extension-to-IsoKristiina-Shopping-Centre-adds-to-shopping-space-in-Lappeenranta-Finland)

Generally, the major manufacturer of welded sections discussed above is Ruukki, now it is a part of SSAB (Svenskt Stål AB), which is concentrated on manufacturing of high strength steel.

WQ-beam is a welded torsionally rigid box profile, whose height equals the height of hollow core slabs or thin shell slabs. The Letter W means welded and letter Q describes the shape of the profile. It consists of plates which are short blasted and flame-cut according to the dimensions. After that it is welded together using arc welding equipment. Next, the necessary holes are drilled.

Usually S355 steel grade is used, but other steel grades can be used if it is needed. As for a WQ-truss, other parts are welded together at the factory and can be delivered as an assembly.

As to surface treatments, fire protection should be provided for the parts which are visible. The profiles are blasted with steel shots on the surface treatment line prior to coating and surface-treated with a primer. Fire protection and/or surface coatings are usually applied at the construction site according to a separate plan. If the fire protection coating is applied at the factory, the coating must withstand the weather stresses occurring during transportation.
(http://www.ruukki.com/Construction/Steel-frame-structures/WQ-beam-system)

2.2 Typical dimensions of WQ-beam

According to TRY STEEL STANDARD CARD No 21/2009, the following dimensions are recommended:

- Bottom flange width min 250 mm max 700 mm
- Web height min 265 mm max 800 mm
- The top flange width min 120 mm max 390 mm
- The thickness min 10 mm max 60 mm
- Bottom flange thickness min 10 mm max 35 mm
- Web thickness min 5 mm up to 10 mm

Additional information about the profile sizes can be found in catalogs, but generally the section can be chosen by a customer.

3 APPLICATION AREAS AND LOADS

The efficiency of trusses comparing to beams increases with the length of a span, because the bearing capacity is spent on imposed loads, but not on its own weight. This factor enables the construction designer to create longer spans, which are so common in public, industrial and special purpose building design.

In the past a WQ-beam was called a HQ-beam (Hitsatut palkit) but now this name is not popular. This solution was developed to design slim flooring systems in steel built constructions.

In the WQ-truss system the main chord acts like a support for hollow core slabs or thin-shell slabs resting on it. The bottom flange of WQ-beam from both sides looks similar to a cantilever, which carries load from the floor structure. Hollow core slabs are installed without neoprene, so that slabs rest on bottom flanges and transfer loads directly.(http://www.elementtisuunnittelu.fi/fi/Haku?term=WQ)

Figure below shows a picture of WQ-beam and hollow core slabs.

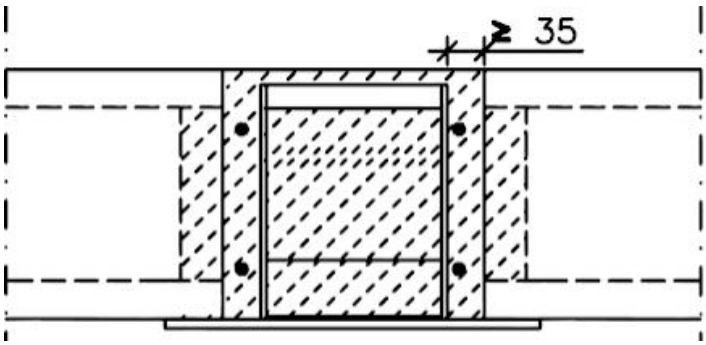

Figure 4 WQ-beam and hollow core slabs (http://www.elementtisuunnittelu.fi/fi/Haku?term=WQ, DO331: Ontelolaatan liitos WQ-palkkiin (keskipalkki))

Generally, the height of the upper chord is equal to the height of the hollow core slab, but when a stronger profile with a greater resistance is needed, it is also possible to use bigger cross sections with elevating supports which are up to 180 mm. In Figure 5 are represented the main possible options of WQ-beam cross sections.

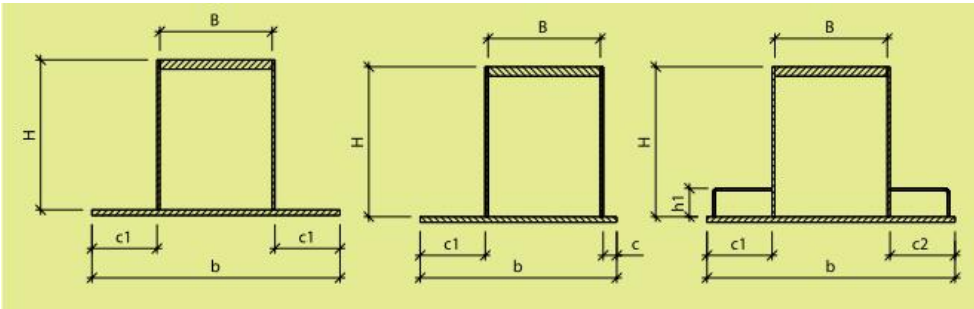

Figure 5 Cross sections of WQ-beam (http://www.ruukki.com/Construction/Steel-frame-structures/WQ-beam-system)

Additionally, it can be pointed out that WQ-truss can act as a strong roof structure for industrial or public buildings. This solution will resist large loads and there will not be any problems with fire protection, usually R15 fire resistance should be provided.
As one may see below in Figure 6 is depicted WQ-truss system which is a roof structure.

Figure 6 WQ-truss in shopping mall, Lappeenranta(http://www.ruukki.com/News-and-events/News-archive/2014/Extension-to-IsoKristiina-Shopping-Centre-adds-to-shopping-space-in-Lappeenranta-Finland)

3.1 Hollow core slabs

Hollow core slabs are prestressed prefabricated elements with continuous voids. There are many advantages of this system due to the convenience in use, quick installation process and efficiency. The voids in these slabs allow placing electrical and mechanical runs in it to avoid extra work. Additionally, the holes improve the thermal and acoustic properties. Besides that, the solution has a great capacity and fire resistance; it can be applied in situations where large spans are needed.

Joints are filled with latex cement and top surface should be coated with composite structural concrete.

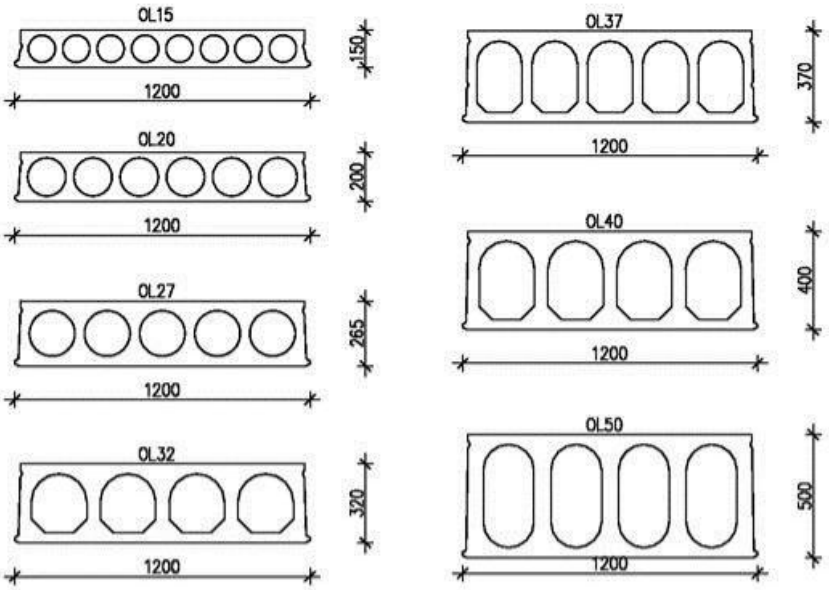

Figure 7 Typical dimensions (http://www.elementtisuunnittelu.fi/fi/Haku?term=WQ, DO331: Ontelolaatan liitos WQ-palkkiin (keskipalkki))

3.2 Special design problems

According to TRY STEEL STANDARD CARD No 21/2009 there are several aspects which should be taken into consideration when designing a WQ-beam.

Since hollow core slabs rest on the bottom flange of the beam, the support reaction is located on the distance d/2. This distance equals the support width divided by 2, but to be on the safe side the following formula is used: $b_j+(b- b_j)/3$, where b_j is the distance between the hollow core slab and the web of a WQ-beam. (Figure 8)

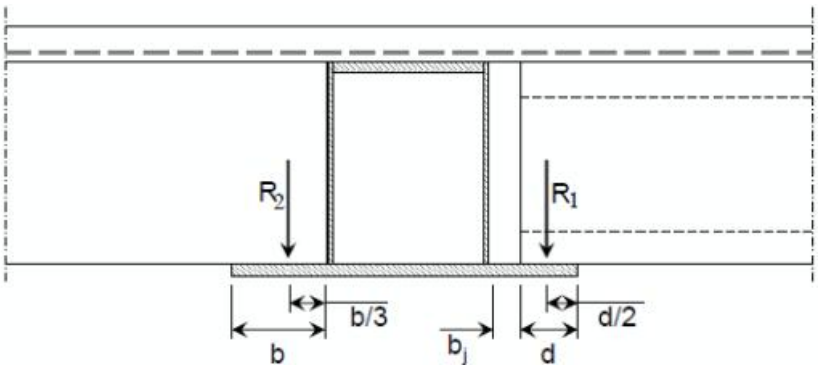

Figure 8 Support reactions of WQ-beam (TRY STEEL STANDARD CARD No 21/2009)

4 HOLLOW CORE SLAB FAILURE

In this chapter the information is provided from the tests on prestressed hollow core slabs supported on beams, Finnish shear tests on floors in 1990–2006. These tests were done by Matti Pajari and the aim was to check whether hollow core slabs lose their shear capacity if they are supported by a WQ-beam. Some facts about the common failures during the tests could be helpful to understand the structural behavior of the WQ-beam and hollow core slabs.

4.1 Test arrangements

In the pictures below (Figure 9 and 10) the reader can see the test plans and loading conditions. The slabs were supported by the end beam which is made of hollow section profiles 200*200*12.5, the other part was attached to a WQ-profile in the same way as it is supposed to be in a real building. This information will help to imagine the situation.

The WQ-beam had simple (pinned) supports at the ends. The purpose was to make the load on hollow core slabs close enough to uniformly distributed nature. For that purpose two point loads were separated into several using primary, secondary as can be seen in Figures below.

Test arrangement goal was to simulate the conditions similar to the load during an average building exploitation.

The steel grade approximately S350 was used for hollow sections and the WQ-beam.

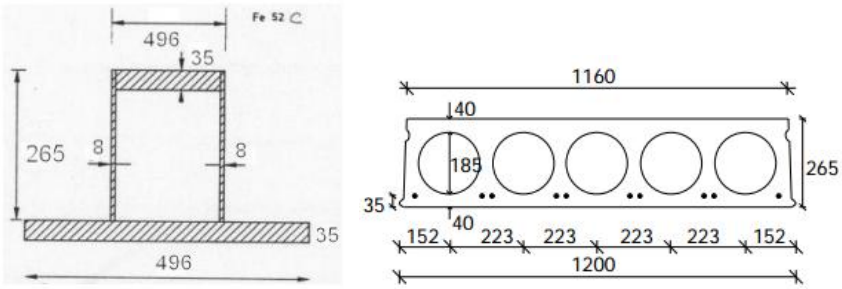

Figure 9 WQ-beam cross section and HCS geometry (Finnish shear tests on floors in 1990–2006)

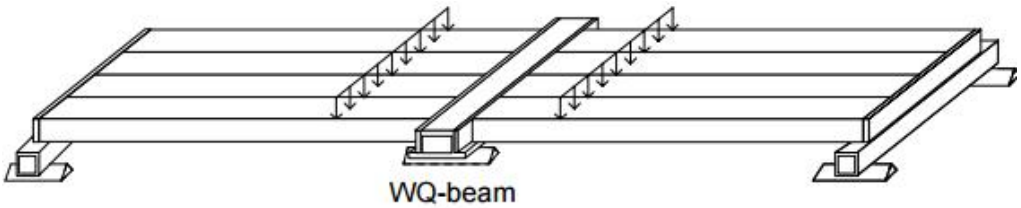

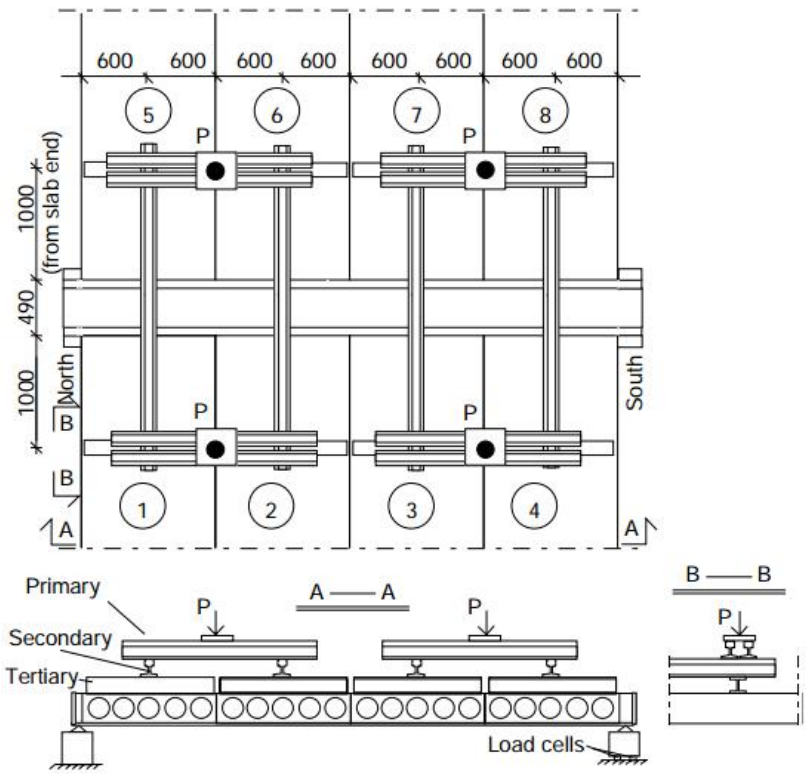

Figure 10 Test scheme (Finnish shear tests on floors in 1990–2006)

4.2 Loading

The loading process was divided into three stages and each stage describes different cracks and failures. Table 1 below lists the stages of hollow core slabs failure.

Table 1 Failure process description (Finnish shear tests on floors in 1990–2006)

Stage I	Cracks parallel to and along the edges of the WQ-beam were observed in the joint concrete. Some longitudinal cracks along the strands in the soffit of the slabs and vertical cracks in the tie beams at the ends of the floor were discovered.
Stage II	The cracks along the edges of the WQ-beam grew gradually and at P = 230 kN they were continuous from one beam end to the other. At P = 273 kN, an inclined crack, starting at the mid-depth of slab 4 next to the WQ-beam and growing upwards, appeared. At P = 283 kN an inclined crack also appeared at the end of slab1, and at P = 292 kN in slab 8.
Stage III	Right before failure, an inclined crack was observed in slab 8, and at the same time, a similar crack appeared in slab 1. At P = 345 kN, slabs 8 and 7 failed in shear.

In the Figure 11 the reader can see the shear failure of the hollow core slab which locates near the WQ-beam. Also, Figure 12 illustrates the scheme of cracks.

Figure 11 Shear failure of a slab (photo) (Finnish shear tests on floors in 1990–2006)

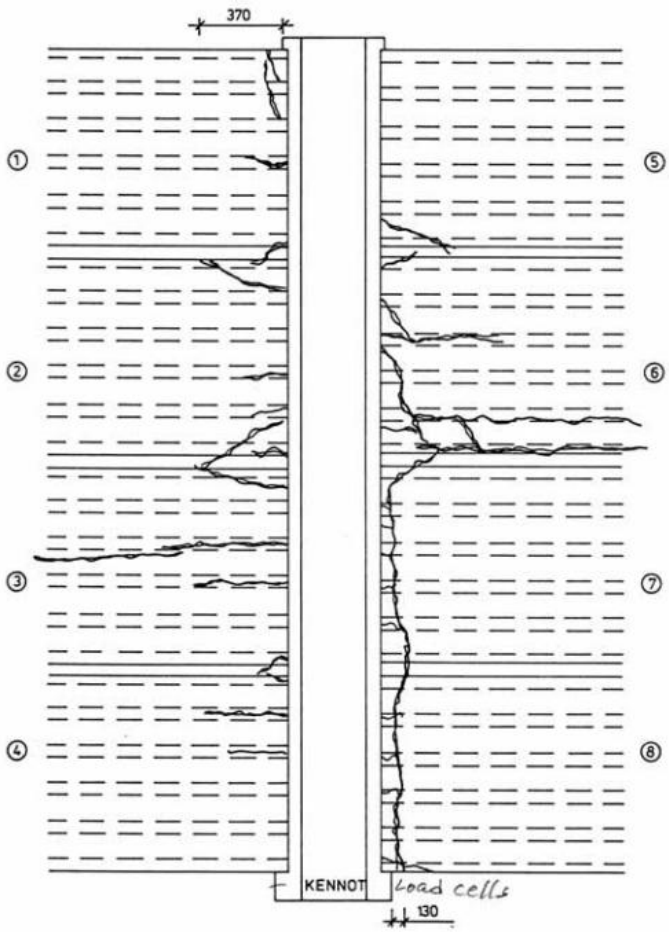

Figure 12 Failure scheme (Finnish shear tests on floors in 1990–2006)

Appropriate calculations of the shear resistance of one hollow core slab were performed. The analysis was based on the test results. The capacity was 166 kN.
After the test completed designers decided to organize a test with similar WQ-edge beams and it was amazing when the shear capacity of hollow core element was 230.5kN.

These results lead to conclusions that WQ-profile influences on the shear capacity of hollow core slabs.

4.3 Test results

Hollow core slabs utilize only 72% of their capacity when they were used with a WQ-beam, comparing to a usual concrete support. The beam did not yield in the floor test, the capacity loss happened because of the shear failure of hollow-core slabs.

So, one may see that this test was quite important. The reason is that a hollow core slab is a complicated post-tensioned concrete element. Its thickness is often chosen from experience, or taken from the manufacturer. As it was many times stated earlier, a WQ-beam system has not yet become popular enough. Therefore, it is hard to find a person experienced in its design process. Most of the engineers may not be aware of the slab capacity that becomes around 25% less.

In conclusion, it must be again underlined that this chapter is one of the most important. The phenomenon tested is extremely unobvious, especially for a WQ-truss system that is positioned as a simple, fast and cheap alternative to huge cast-in-situ concrete beams. So, a designer must have an additional discussion with a manufacturer to consider the decreased capacity.

5 JOINTS

Generally, joint design instructions will not be provided in this thesis, but it is necessary to provide typical joints between the WQ-truss and other elements which are made of steel or concrete. This information will help to understand this system and will make it easier to make detailed drawings.

5.1 Concrete columns

The Figure 13 below shows the typical connection between the WQ-beam profile and concrete column element. Usually an embedded steel part is located inside the column and after assembling it is welded with WQ-beam plate. Additionally, stiffeners should be provided for a WQ-beam profile to ensure stability and safety.

During the installation temporary supports have to be provided. Usually hollow core slabs are maintained firstly at one side and only then at the other. As a result there is torsion in the WQ-beam which should be taken into account during the design process.

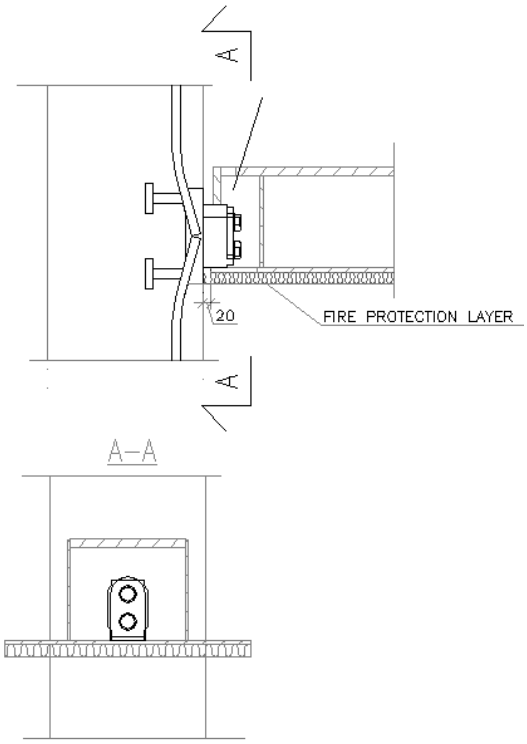

Figure 13 Connection between WQ-truss and concrete column (http://www.elementtisuunnittelu.fi/fi/Haku?term=WQ, DTK201:WQ-palkin liitos betonipilariin PCs-konsoli)

5.2 Steel columns

Steel columns have the lock principle. A plate which is welded with a cantilever tube is located inside the beam. Then the WQ-profile rests on it and transfers the loads.

A stiffening plate in the WQ-beam should be provided.

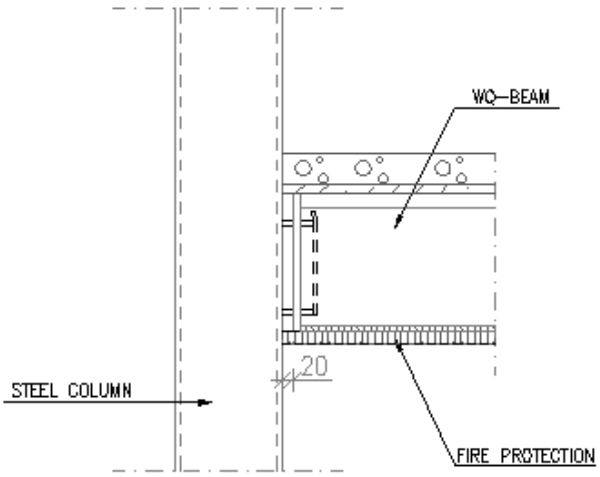

Figure 14 Connection between WQ-truss and steel column

In this case torsion should be avoided using temporary supports.

5.3 Joint between hollow core slabs and WQ-beam

After the installation process longitudinal reinforcement between pre-stressed hollow core slabs and WQ-beam must be provided. Then the connection should be casted with concrete filling.

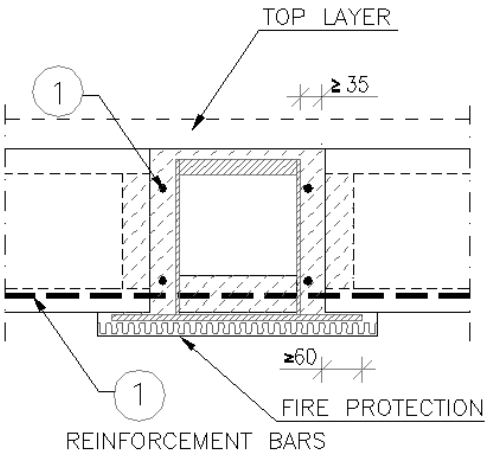

Figure 15 Connection between WQ-truss and hollow core slabs (http://www.elementtisuunnittelu.fi/fi/Haku?term=WQ, DO331: Ontelolaatan liitos WQ-palkkiin (keskipalkki))

The reinforcement bars which are marked in Figure 15 are used to serve as joint reinforcement and as emergency reinforcement.

5.4 Connection between WQ-beam and secondary beams

The last detail represents a common solution of a steel beam connection, where steel plates should be welded to the main WQ-beam and to the secondary one. After that the connection is fixed with bolts.

The Figure 16 shows a detail of the connection between the secondary beam and the main beam.

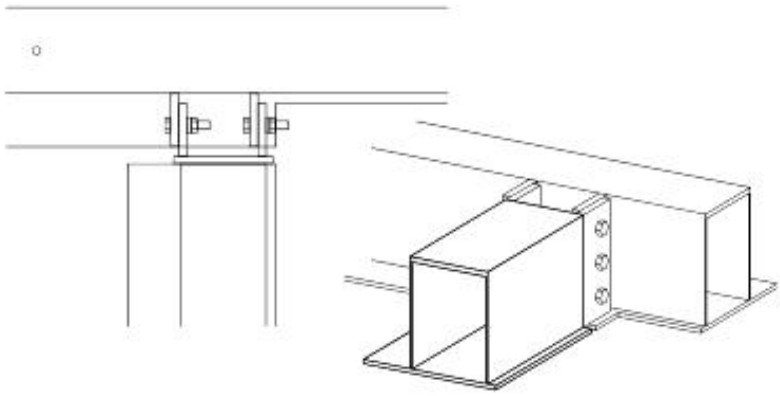

Figure 16 Connection between WQ-beam and secondary beams (http://www.ruukki.com/Construction/Steel-frame-structures/WQ-beam-system)

6 EUROCODES AND SNIP

6.1 Russian norms and general information about SNiP

SNiP is a set of rules and normative acts regarding technical, economical and legal issues which are approved by executive authorities. These rules govern the implementation of urban development activities as well as engineering and architectural design.

The current normative basis in construction in the Russian Federation fully meets the reliability and safety of operated and planned construction projects. There have not ever been any accidents because of compliance with existing standards, but only as an outcome of its violation.

6.1.1 History

Until 1955 there were no comprehensive regulations in construction field in Soviet Union. Development of SNiP in Soviet Union started in 1939 by L.A. Serk.
Norms were divided by 4 parts:

- General information
- Design standards
- Rules of production and acceptance of works
- Estimation norms and rules

Generally, accepted norms contained not only design regulations, but it included also norms, which determine main responsibilities and rights of an engineer and of an architect.

In the modern world new technologies, calculation methods and software are developed every day and nowadays in addition to SNiP, SP are used. SP (Set of Rules) is an actualized version of SNiP, which contains updated rules and standards.

In addition, manufacturing, qualit and other standarts are also used. These norms are equivalent to European ISO.

6.1.2 Classification and chapters

SNiP is divided into sections; each document has its own number. SNiP as well as Eurocode is divided into parts depending on the load-bearing material type, purpose of the structure and structure types.

In this thesis SNiP II-23-81 Steel structures and SNiP 2.01.07-85 Loads and actions on structures will be taken into consideration together with SP 16.13330.2011 and SP 20.133330.2011 correspondingly.

6.2 SNiP and Eurocodes

A significant package of SNIP for design purposes of various kinds of structures is a direct analogue of the Eurocodes, as it is evident from Table 2 below. Note that calculation methods of construction designs for limit states were adopted in the Russian standards before they were included in the Eurocodes.

Table 2 Comparison of European and Russian norms (Information about harmonization of normative documents of the Russian Federation with foreign standards, including the European)

Eurocode number	European code	Russian code
EN 1990	Basis of structural design	GOST 27751- 87
EN 1991	Actions on strcutures	SNiP 2.01.07-85*
EN 1992	Design of concrete structures	SNiP 52-01-2003,
EN 1993	Design of steel structures	SNiP II-23-81*
EN 1994	Design of composite steel and concrete structures	SP 52-101-2003
EN 1995	Design of timber structures	SNiP II-25-80
EN 1996	Design of masonry structures	SNiP II-22-81*
EN 1997	Geotechnical design	SNiP 2.02.01-83*, SNiP 2.02.03-85
EN 1998	Design of structures for earthquake resistance	SNiP II-7-81*
EN 1999	Design of aluminium structures	SNiP 2.03.06-85

*Use with corresponding SP

6.3 Calculations according to SP, SNiP and Eurocodes

Both the Russian and European norms estimate the reliability and safety of a structure using the ultimate limit state and serviceability limit state. However, in SNiP these states are named first and second limit states respectively. The calculations must include such factors as classification of structures in terms of responsibility, serviceability and durability of a structure.

The ultimate limit state or the so called first limit state determines the safety of a structure. The serviceability limit state or second limit state concerns the comfort of use and appearance of a structure.

During the actualization of SP, calculation methods and approaches were adapted to international standards. In the Russian norms there is a unified method for the estimation of design loads taking into account safety factors as it is done in Eurocodes.

7 DESIGN OF WQ-TRUSS ACCORDING TO RUSSIAN STANDARDS

7.1 Structural analysis

For WQ-truss design there is no clear definition of what kind of structural analysis should be used in Russia. In the case of an average truss it is not a disadvantage, because a designer does not face bending moments (statically determinate structure) and there are no possibilities to apply material non-linearity in a global analysis. However, for a WQ-truss it could be beneficial to use plastic analysis for the upper chord in bending, because it reduces bending moments in critical points as in the Figure 17 below. As far as in the standard there are no clear regulations, this thesis is limited to a global elastic analysis with no bending moment redistribution.

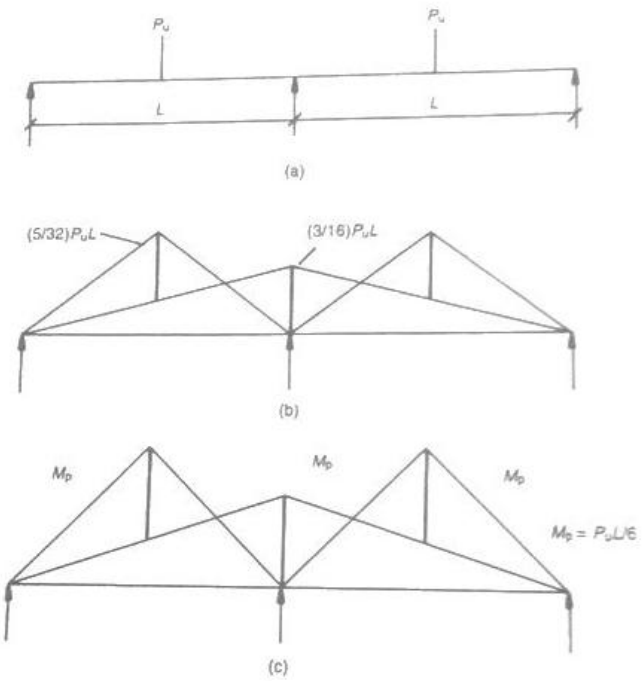

Figure 17 The influence of plasticity in structural analysis. a) – calculation model, b) – elastic bending moments, c) – plastic bending moments (R.S. Narayanan, A. Beeby,Designers' guide to EN1992-1-1 and EN1992-1-2, 2009)

7.2 Initial imperfections and second order effects

According to the Russian norms no global second order effects are considered. Instead of that the same method as in Eurocode 3 is used for alocal member verification. P-delta effects and relevant geometry inclinations are built in the formulas for the buckling resistance of members.

7.3 Modeling

Usually a truss is subjected to external loads at its node points. That results to only axial forces in bracing members. However, this is not the case with

the WQ system that is intended to support uniformly distributed floor structures. This is why secondary moments in bracing elements must be considered when the design is done according to the Russian standards.

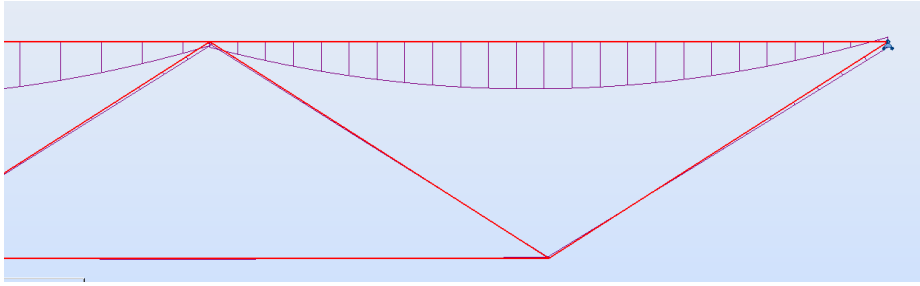

Figure 18 Secondary moments in bracing elements

In the Russian standards there are no clear rules about this design aspect and it is wise to take these moments into account. However in Eurocode 1993-1-8 in clause 5.1.5 there are special requirements, which allow ignoring secondary moments altogether.

7.4 Fundamental components of member resistance

In general, it can be pointed out from both standards that resistances depend on several determinant aspects which should be highlighted in this thesis.

The first one is geometrical properties of the member cross section. Simply, the bigger it is the more force it can take. Anyway, for different failure modes the cross section must be larger in different parts. For instance, a good bending resistance is achieved by a high value of second moment of inertia. This means that a member section should be very deep. On the contrary, the resistance in axial compression increases with the cross section enlargement independently of the location of the enlarged parts.

Secondly, material properties are also sufficient. Steel with a better yield strength is allowed to be subjected to higher stress values.

8 LOAD DETERMINATION

8.1 Load classification

Different loads are considered with their own factor in the European and Russian norms: permanent, variable and accidental load types can be distinguished. For a better understanding of load types see Table 3.

Table 3 Comparison of main load cases in European and Russian load classification

Load type, symbol	SP20.13330.2011
Permanent, P_d	• self-weight of structures • hydrostatic pressure • soil pressure • prestressing
Long-term actions, P_l	• temporary structures • construction equipment weight • stored materials in warehouses, fridges and these kinds of rooms • shrinkage of a structure
Short-term actions, P_t	• snow and wind loads • live load • self-weight of transport equipment • self-weight of people and equipment and materials during repair works
Accidental, P_s	• explosions • seismic actions • loads from fire accidents • loads from transport accidents • loads because of malfunction of some equipment • loads caused by deformations like from soaking of soil

This scheme differs a little bit from the Eurocodes, but the calculation principle is the same. The general design load formula is provided below:

$$N = \gamma_n \sum_{i-1}^{m} F_{ni} \gamma_{fi} \psi_i \alpha_i \leq \mathrm{AR_n}\ \gamma_c / \gamma_m$$

[SP 20.13330.2011]

The ultimate limit state principle implies that maximum design affecting force is less than the design element resistance as it is done in the European standard. Safety factors and load combinations will be described below.

8.2 Load combinations

As for the Russian Federation the following load combinations are given:

– The main combination type which includes permanent, long-term and short-term actions:

$$C_m = P_d + (\psi_{l1}P_{l1} + \psi_{l2}P_{l2} + \psi_{l3}P_{l3} + \ldots) + (\psi_{t1}P_{t1} + \psi_{t2}P_{t2} + \psi_{t3}P_{t3} + \ldots);$$

[SP 20.13330.2011, Chapter 6.2 a, 6.1]

– Accidental combination type, which includes accidental actions:

$$C_s = C_m + P_s$$

[SP 20.13330.2011, Chapter 6.2 b, 6.2]

Coefficient for long-term actions:

ψ_{li} ($l = 1, 2, 3, \ldots,$)

$\psi_{l1} = 1{,}0; \quad \psi_{l2} = \psi_{l3} = \ldots = 0{,}95$

Coefficient for short-term actions:

ψ_{ti} ($i = 1, 2, 3, \ldots,$)

$\psi_{t1} = 1{,}0; \quad \psi_{t2} = 0{,}9, \quad \psi_{t3} = \psi_{t4} = \ldots = 0{,}7$

9 SAFETY FACTORS

9.1 Material safety factor

The design yield strength of material depends on a stress condition. The main cases are described below [SP 16.13330.2011, Chapter 6.1, Table 2]:

– Bending, tension and compression

$$R_y = R_{yn}/\gamma_m$$

$$R_u = R_{un}/\gamma_m$$

– Shear

$$R_s = 0.58R_{yn}/\gamma_m$$

Actually, the material strength does not anyhow change when it comes to shear. The coefficient 0.58 comes from the Von Misses yield criteria, where to obtain shear stress τ axial stress σ is divided by square root of 3 (or multiplied by about 0.58). Since in SNIP the designed value of shear stress is compared with resistance, the latter must represent the maximum τ that material can take.

In the Russian standard material properties are taken into account by using the following coefficients of material reliability according to SP16.13330.2011, Chapter 6.2, safety factors are defined by a nomenclature of steel profiles, called GOST. GOST is a state standard which includes a list of possible cross section types with specifications and own requirements.

Material safety factors are divided into four possible variants [SP16.13330.2011, Chapter 6.1, Table 3]:

– GOST 27772 (except steel S590 and S590K) and other normative documentation which uses the same control procedure, γ_m=1.025
– GOST 19281 and GOST 8731 for steel with yield strength which is more than 380 N/mm^2, γ_m=1.100
– Other profiles which satisfy the normative requirements, γ_m=1.050
– For profiles which are supplied using foreign normative documentation, γ_m=1.100

9.2 Consequence and reliability factors

The liability of the building and facilities when designing using limit states is determined by the size of the material and social damage. The safety factor value depends on the class of responsibility for buildings or structures. In order to take into account consequence classes of structures, buildings were divided into three groups [SNiP 2.01.07]:

- I - high risk
- II - normal risk
- III - low risk

The first group corresponds to buildings which typically include oil factories, unique buildings and structures with the height and span more than 100m. A collapse of such constructions can lead to significant economic, social and ecological losses, $0.95 \leq \gamma_n \leq 1.2$.

Next, the second group should be applied to residential, commercial and public buildings $\gamma_n = 0.95$.

Last one, the third group is used for seasonal and auxiliary constructions such as greenhouses, small warehouses and similar facilities, $0.8 \leq \gamma_n \leq 0.95$.

The following safety factor should be used to reduce the bearing capacity and resistances of buildings and maximum deformations should be divided by this factor. Besides that it is necessary to multiply design loads and all other acting forces on γ_n.

9.3 Coefficient for working conditions

The coefficient for working conditions is used in purpose to decrease the resistances depending on element and stress type. Due to the large number of various situations in this article the information will be limited to the main beam cases.

Beams and compressed elements of trusses in public and commercial buildings $\gamma_c = 0.9$. [SP 16.13330.2011, Chapter 4.3.2, Table 1]

9.4 Safety factor for ultimate resistances

If a designer makes calculations using the ultimate yield strength of steel, then it should be applied with factor $\gamma_u = 1.3$. [SP 16.13330.2011, Chapter 4.3.2]

9.5 Coefficient depending on loading type

The next factor which is taken into account considers loading type.

Steel structures γ_f=1.05
Concrete structures $\gamma_f = 1.1$
Dead load $\gamma_f = 1.05$
Wind load $\gamma_f = 1.4$
Snow load $\gamma_f = 1.4$

10 SNOW LOADS

In northern countries precipitations have significant effect on building design while calculating loads caused by snow. There are several factors affecting a snow load analysis which includes accumulated snow in different regions and roof shape. Usually, the snow load is formed during the whole winter season. When the snow load is moved by wind, it can also be melted because of the building heat and from the warm temperatures.
All those aspects are taken into account in the Russian standard using the shape factor μ and navigating by zoning maps.

10.1 Shape coefficient

In order to cover the usual cases of the buildings it is more understandable to systematize the information creating a table according to SP 20.13330.2011. Table 4 contains all usual types of roofs and corresponding coefficients μ.

Table 4 Coefficients μ

Roof and load scheme	Coefficient μ
Monopitched and duopitched roofs 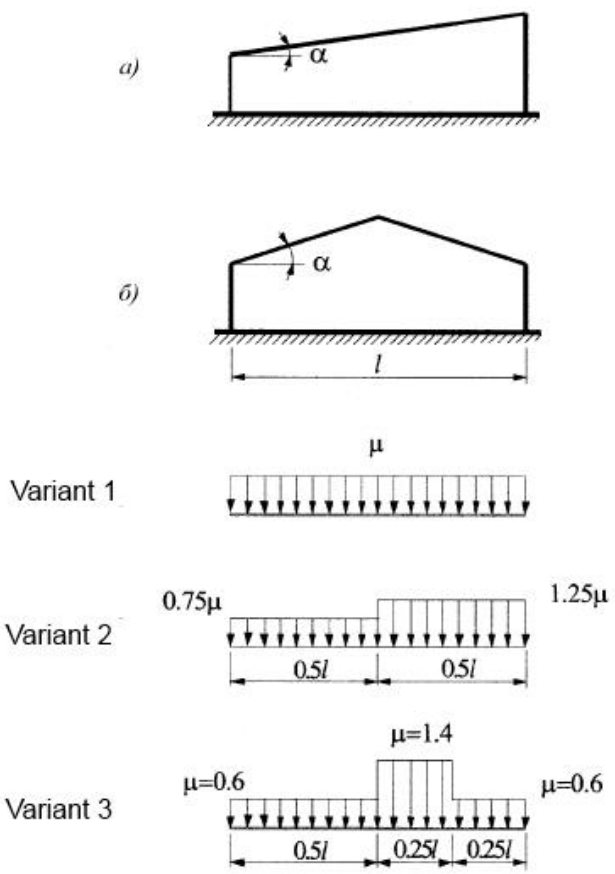 	μ=1 if α≤25° μ=0 if α≥60° Variants 2 and 3 should be used for duopiched roofs, besides that variant 2 if 20 ≥α≤30 and variant 3 if 10 ≥α≤30, but the last one should be used only if there are the walking bridges or aeration devices on the ridge cover

Two- and multi-span building with gable covers 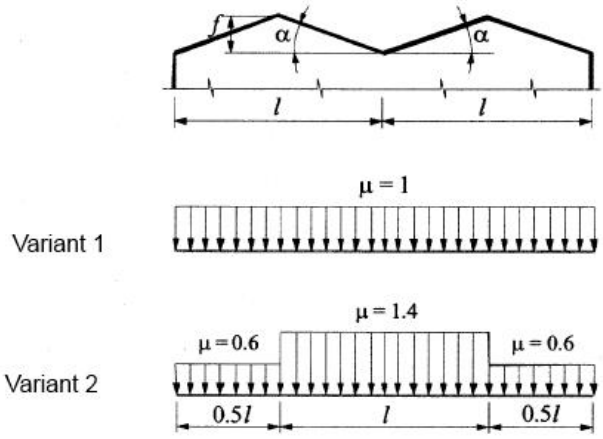 	Variant 1 should be applied if α≤15°
Buildings with parapets 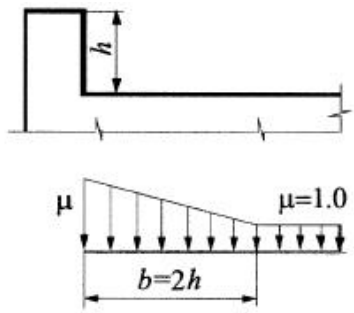 	If h>S_0/2, then μ=2h/ S_0, but not more than 3. For special cases the increased load because of snow drift should be taken into consideration.

10.1.1 Characteristic snow load

The formula below provides general formula of snow load given in Russian SP. This equation contains the same factors as Eurocodes.

$S_0 = 0.7 c_e c_t \mu S_g$ [SP 20.13330.2011, Chapter 10.1, 10.1]

where,
$c_в$ – coefficient of wind effect, Chapter 10.5
c_t – thermal effect, Chapter 10.6
μ- shape factor
S_g – snow load on ground

The influence of the terrain type is expressed using the coefficient $c_в$ including the it includes wind velocity effect. This factor makes the design process easier to avoid huge snow drifts.

The map below in Figure 19 shows the average wind velocity depending on the region of Russia, the value is given in m/s. All maps can be found in Appendix Ж of SP.

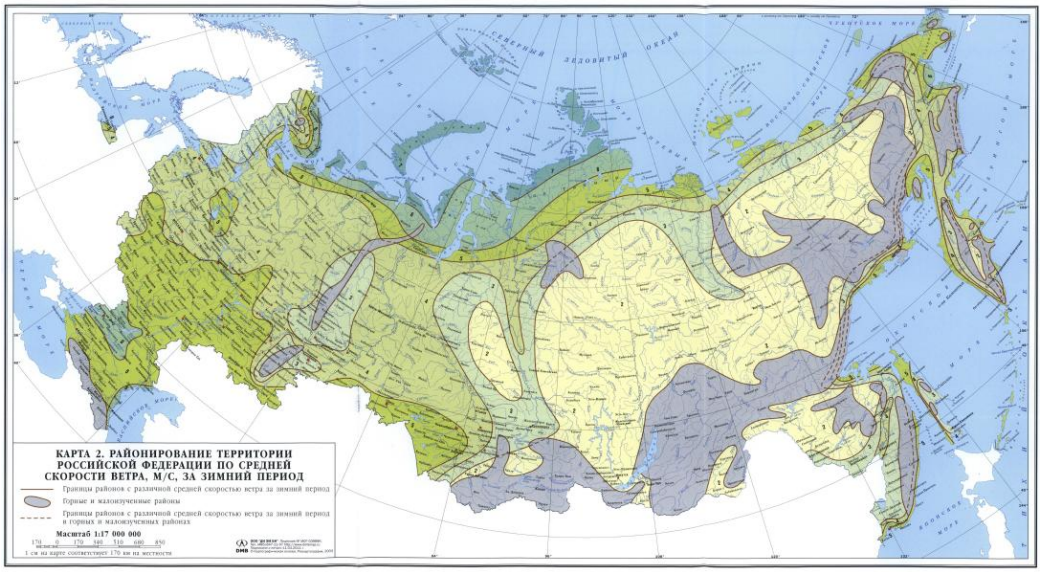

Figure 19 Average wind velocity in winter period in Russian Federation [SP 20.13330.2011, Appendix Ж]

If the wind in winter time is less than 2m/s and the roof slope is less than 12% then the formula below has to be applied:

$c_e = \left(1.2 - 0.1V\sqrt{k}\right)(0.8 + 0.002b)$ [SP 20.13330.2011, Chapter 10.5, 10.2]

where,
k – coefficient depending on terrain type, can be found in Table 11.2 of SP
b – width of the coverings, not more than 100m
V – average wind velocity, this value can be found from the map of average wind velocity in winter period, see Figure 19

Terrain type coefficient depends on height $z_в$ [SP 20.13330.2011, Chapter 11.1.5], which is:

if $h \le d \rightarrow z_e = h$;
if $h \le 2d$:
for $z \ge h - d \rightarrow z_e = h$;
for $0 < z < h - d \rightarrow z_e = d$;
if $h > 2d$:
for $z \ge h - d \rightarrow z_e = h$;
for $d < z < h - d \rightarrow z_e = z$;
for $0 < z \le d \rightarrow z_e = d$.

Then a designer has to consider the terrain type category of the building [SP 20.13330.2011, Chapter 11.1.6]:

- A – countryside, tundra, seaside or places near the lakes, reservoirs, where buildings height is less than 10m
- B – cities, forests and other places with obstacles which are higher than 10m
- C – cities with dense buildings higher than 25m

The last step is to see the Table 11.2 of SP which is shown below as a Table 5.

Table 5 Coefficient k [SP 20.13330.2011, Chapter 11.1.6, Table 11.2]

Height z_e, m	Coefficient k for different terrain types		
	A	B	C
≤5	0,75	0,5	0,4
10	1,0	0,65	0,4
20	1,25	0,85	0,55
40	1,5	1,1	0,8
60	1,7	1,3	1,0
80	1,85	1,45	1,15
100	2,0	1,6	1,25
150	2,25	1,9	1,55
200	2,45	2,1	1,8
250	2,65	2,3	2,0
300	2,75	2,5	2,2
350	2,75	2,75	2,35
≥ 480	2,75	2,75	2,75

For single-span and multi-span buildings with the roof slope from 12 to 20% which are located in the regions with the velocity value is more than 4, c_B=0.85. [SP 20.13330.2011, Chapter 10.3, 10.6]

In case of skyscrapers higher than 75m with a slope less than 20% it is allowed to take c_B as 0.7. For more information and other cases see SP 20.13330.2011, Chapter 10.

The thermal coefficient is used in purpose to reduce the snow load on roofs with a high thermal transmittance value, where c_t=0.8 In all other cases take c_t as 1.

Snow load on the ground is provided in the zoning map the of Russian Federation by the snow load on the ground, see Figure 20 below.

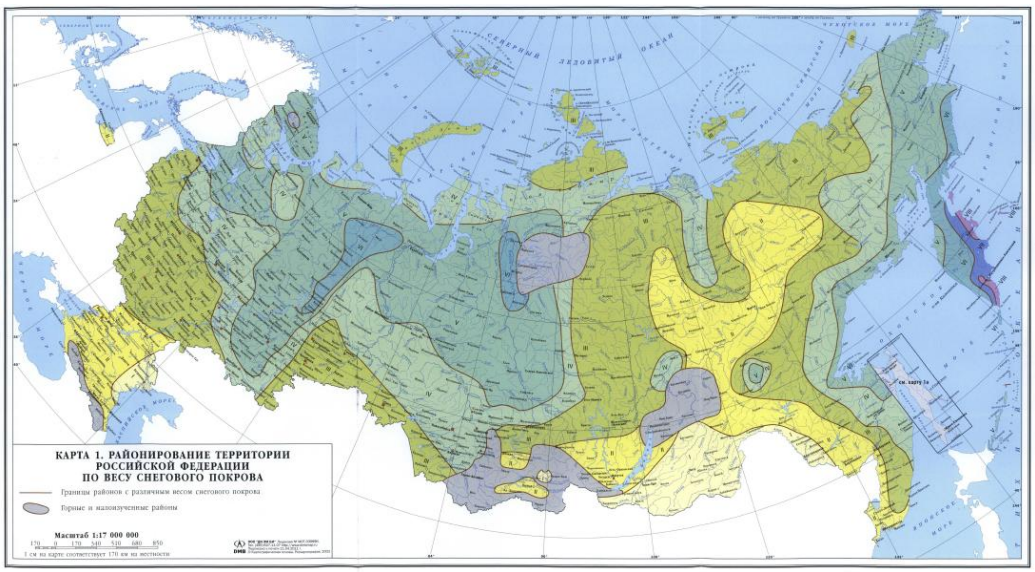

Figure 20 Zoning by snow load on the ground in Russia[SP 20.13330.2011, Appendix Ж]

After the determination of the correct region a designer finds the snow load of SP which can be seen below in Table 6.

Table 6 Characteristic snow load [SP 20.13330.2011, Chapter 10.2, Table 10.1]

Snow regions (Appendix Ж)	I	II	III	IV	V	VI	VII	VIII
S_g, kPa	0,8	1,2	1,8	2,4	3,2	4,0	4,8	5,6

11 WIND LOAD

In a side-wind pressure air flow collides with the wall and the roof of the building. Near the wall of the house the wind goes swirling, besides that some of it goes down to the foundation, and the other at a tangent to the wall hits the eaves of the roof and uplifts roof corners. As the wind pressure causes suction pressures, claddings and roof structure should be securely fixed. The flatter the roof, the higher the suction forces are acting on it. Figure 21 below illustrates the typical behavior of a structure when wind acts on it.

In addition, corners of the roof are lifted up by the wind.

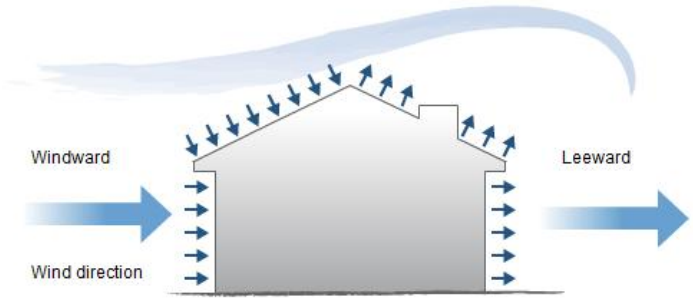

Figure 21 Wind suction (https://www.dlsweb.rmit.edu.au/toolbox/buildright/content/bcgbc4010a/01_loads_loading/01_primary_loads/page_006.htm)

Wind pressure depends on several factors such as the shape of the roof, orientation of a building and wind velocity.

As it is stated in SP 20.13330.2011, Chapter 11 the characteristic wind load is determined by adding a fluctuating component of wind load to the average wind load.

$w = w_m + w_p$ [SP 20.13330.2011, Chapter 11.1.2, 11.1]

where
w_m – average wind load
w_p – fluctuating wind load

The first one can be calculated using the following formula below:

$w_m = w_0 k(z_e) c$ [SP 20.13330.2011, Chapter 11.1.3, 11.2]

In the expression above w_0 is the characteristic wind load depending on the wind pressure regions. This information is given in the wind pressure map of the Russian Federation.(Figure 22)

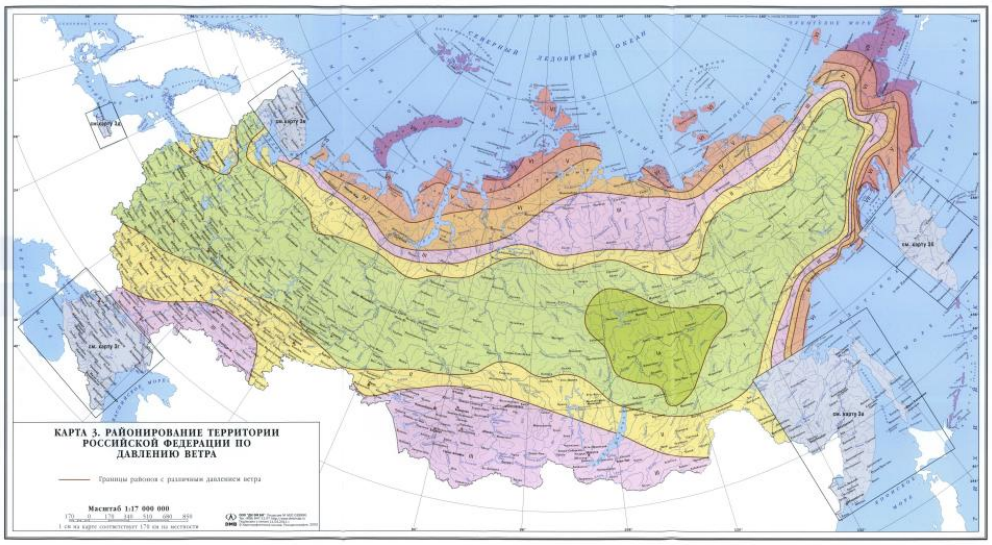

Figure 22 Wind pressure map of Russian Federation [SP 20.13330.2011, Appendix Ж]

After that, factor k contains information about the change of wind pressure depending on terrain type. This coefficient was discussed above.

Then, aerodynamic coefficient c, which takes into account the direction of the wind in relation to the structure, should be found. Table 7 below shows clear information about the way of detecting the aerodynamic coefficient according to SP.

Table 7 Aerodynamic coefficient c [SP 20.13330.2011, Chapter 11.1.7]

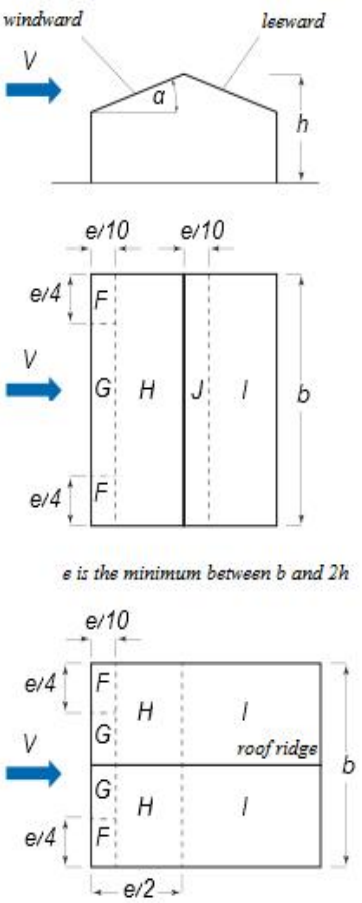

Coefficients c for duopitched roofs

roof slope	F	G	H	I	J
15°	-0,9	-0,8	-0,3	-0,4	-1,0
	0,2	0,2	0,2		
30°	-0,5	-0,5	-0,2	-0,4	-0,5
	0,7	0,7	0,4		
45°	0,7	0,7	0,6	-0,2	-0,3
60°	0,7	0,7	0,7	-0,2	-0,3
75°	0,8	0,8	0,8	-0,2	-0,3

roof slope	F	G	H	I
0°	-1,8	-1,3	-0,7	-0,5
15°	-1,3	-1,3	-0,6	-0,5
30°	-1,1	-1,4	-0,8	-0,5
45°	-1,1	-1,4	-0,9	-0,5
60°	-1,1	-1,2	-0,8	-0,5
75°	-1,1	-1,2	-0,8	-0,5

The last step is to find the pulsation wind pressure using the formula:

$w_p = w_m \zeta(z_e) \upsilon$, [SP 20.13330.2011, Chapter 11.1.8, 11.5]

where

$\zeta(z_e)$ – coefficient of wind pulsation related to terrain type

In the Table 8 the reader can find the wind pulsation coefficient according to the Russian standard.

Table 8 Wind pulsation coefficient [SP 20.13330.2011, Chapter 11.1.8, Table 11.4]

Height z_e, m	Coefficient ζ		
	A	B	C
≤ 5	0,85	1,22	1,78
10	0,76	1,06	1,78
20	0,69	0,92	1,50
40	0,62	0,80	1,26
60	0,58	0,74	1,14
80	0,56	0,70	1,06
100	0,54	0,67	1,00
150	0,51	0,62	0,90
200	0,49	0,58	0,84
250	0,47	0,56	0,80
300	0,46	0,54	0,76
350	0,46	0,52	0,73
≥ 480	0,46	0,50	0,68

υ - coefficient of a spatial pulsation, this factor depends on coefficients ρ and χ

The Table 9 and 10 below will help to determine the orientation factors ρ and χ.

Table 9 Orientation factors ρ and χ [SP 20.13330.2011, Chapter 11.1.11, 11.6]

The main coordinate system which is parallel to the calculation coordinate system	ρ	χ
zoy	*b*	*h*
zox	0,4*a*	*h*
xoy	*b*	*a*

Table 10 Spatial pulsation coefficient [SP 20.13330.2011, Chapter 11.1.11, 11.7]

ρ, m	Coefficiend υ depending on χ, m						
	5	10	20	40	80	160	350
0,1	0,95	0,92	0,88	0,83	0,76	0,67	0,56
5	0,89	0,87	0,84	0,80	0,73	0,65	0,54
10	0,85	0,84	0,81	0,77	0,71	0,64	0,53
20	0,80	0,78	0,76	0,73	0,68	0,61	0,51
40	0,72	0,72	0,70	0,67	0,63	0,57	0,48
80	0,63	0,63	0,61	0,59	0,56	0,51	0,44
160	0,53	0,53	0,52	0,50	0,47	0,44	0,38

12 DESIGN CONSIDERATIONS, FIRST LIMIT STATE

12.1 Web stability check

In SNiP there are several requirements for local stability of a flange and a web, where is generally accepted that separate elements of a profile work as plates which attached either rigid or pinned (sometimes even as a spring) to each other. Local buckling can happen in compressed flange or in the web under the influence of bending and axial forces.

Mainly, upper flanges of WQ-beam in WQ-truss system bear compression from axial forces and compression caused by bending moment, however lower flange takes tension from bending moment, axial compression and also load which comes from hollow core slabs or shell slabs. If stresses will exceed critical values, flanges will lose local stability and consequently the beam will lose the load-bearing capacity.

In Russian standard critical stresses depend on yield of steel and on dimensions of a plate and stresses shouldn't be more than design yield strength, otherwise elements of a profile will lose stability before the beam in general. Elastic analysis is used in design process to be on the safe side.

12.1.1 Web local resistance

Web nominal slenderness should be calculated using the formula:

$$\bar{\lambda}_w = \left(\frac{h_{ef}}{t_w}\right)\sqrt{R_y / E}$$ [SP 16.13330.2011, Chapter 7.3.2]

where
h_{ef} - the full height of the web in welded profiles or distance between internal roundings in rolled sections,
t_w - thickness of the web,
R_y – design yield strength of steel

For further information about effective height see the Figure 23 below.

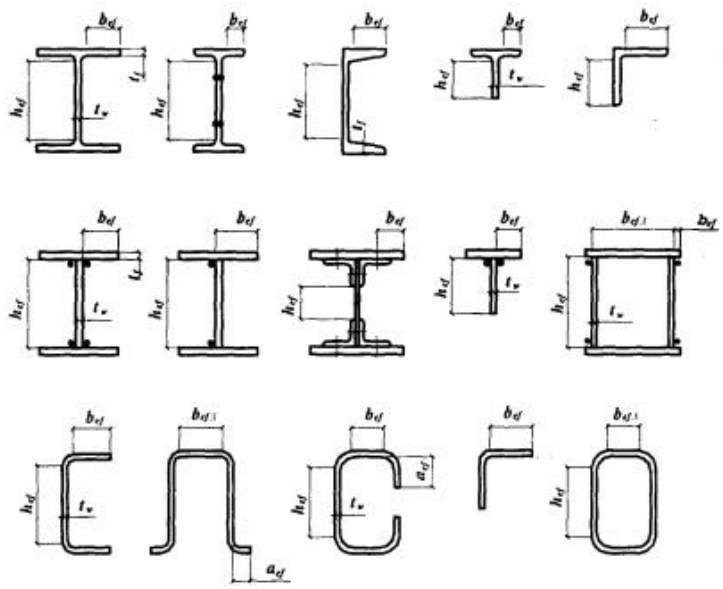

Figure 23 Design cross section parts dimensions[SP 16.13330.2011, Chapter 7.3.1, Figure 5]

The web of the WQ-beam is welded from one side. Consequently it is stable if nominal slenderness doesn't exceed the value 3.2 [SP 16.13330.2011, Chapter 8.5.9]. In case of excessive nominal slenderness a designer should add stiffeners. Other beams in the truss should be checked in the same way.

12.2 Normal forces

Based on the technical guide in strength of materials, axial force represents a special type of deformation when in cross section there are only tension or compression stresses, while bending and shear forces equal to zero. (Darkov and Shapiro, Strength of materials, 1989)

In Chapter 7.1.1 of SP the following condition should be satisfied:

$$\frac{N}{A_n R_y \gamma_c} \leq 1$$

[SP 16.13330.2011, Chapter 7.1.1, 5]

N – design normal force
A_n – cross section area
R_y – design yield strength of steel

The main idea is similar to the idea of Eurocodes, where design normal force should be less than design tension or compression resistance.

12.3 Bending moment resistance

The equation below and design condition in the Eurocode have the same meaning, where the design moment in a nominator has to be less than the design bending resistance in the denominator. The moment resistance is reduced by material safety factor and by working condition factor as it is stated in Chapter 8.2.1 of SP.

$$\frac{M}{W_{n,min} R_y \gamma_c} \leq 1$$

[SP 16.13330.2011, Chapter 8.2.1, 41]

12.4 Shear design

Concerning shear force impact the most vital part of the truss will be the upper chord. The critical points are located near the truss supports. In accordance with Chapter 8.2.1 of SP:

$$\frac{QS}{I t_w R_s \gamma_c} \leq 1$$

[SP 16.13330.2011, Chapter 8.2.1, Table 42]

12.5 Complex stress of bottom flange

In the Russian standard the combined bending and shear section resistance is verified by the following formula:

$$\frac{0.87}{R_y\, \gamma_c} \sqrt{\sigma_x^2 - \sigma_x \sigma_y + \sigma_y^2 + 3\tau_{xy}^2} \leq 1, \tau_{xy} / R_s \gamma_c \leq 1$$

[SP 16.13330.2011, Chapter 8.2.1, Table 44]

An experienced person recognizes Von Misses yield criteria in the two dimensional situations, that is reduced by the safety factor 0.87.

12.6 Combined bending, shear and axial force

For verification of the resistance during the simultaneous actions of bending, normal and shear forces it is required to add stresses caused by axial forces to the formula above, which will guarantee the stability of a cross section.

12.7 Torsion

This problem is not highlighted in this thesis. The reason is that center WQ-beam profile is not subjected to torsion, because it is laterally restraint.

Torsion during the loading and installation period is avoided by temporary supports.

12.8 Member stability check of WQ-truss

12.8.1 Flange local resistance

Flange local resistance is determined in the same way. The nominal slenderness can be calculated applying the following formula:

$$\bar{\lambda}_f = \left(\frac{b_{ef}}{t_f}\right)\sqrt{R_y/E}$$ [SP 16.13330.2011, Chapter 8.4.4, b]

Where b_{ef} – width of the flange, see Figure 24

The stability of the flange is ensured if the characteristic nominal slenderness is less than the ultimate slenderness value which can be calculated from Table 11 below:

Table 11 Ultimate nominal slenderness [SP 16.13330.2011, Chapter 8.4.4, Table 11]

Condition	Formula
Upper flange	0.35+0.0032b/t+(0.76-0.02b/t)b/h
Lower flange	0.57+0.0032b/t+(0.92-0.02b/t)b/h
Between bracing elements of the beam or when only bending stresses exist	0.41+0.0032b/t+(0.73-0.016b/t)b/h

Note! Ultimate nominal slenderness values are determined for beams with 1≤ h/b ≤6 and 15≤ b/t ≤35, if b/t<15 then this value should be taken as b/t=15.

12.9 Lateral-torsional buckling

In SP it is stated that if a beam is laterally restrained it is not required to check this aspect. Thus, WQ-beam in the WQ-truss system is laterally fixed by hollow core slabs, so a designer can consider it laterally stable.

13 DEFLECTION LIMITS, SECOND LIMIT STATE

Large deformations can lead to leakages, poor aesthetic perception of a building and can influence on the comfort of people who use this building. Thus, deformation limitation is an essential point in the design process.

Based on SP 20.13330.2011 Annex E2 the WQ-truss system belongs to the structure type 2 – beams, trusses, floor structures, where the span is about 20m the deflection limit is l/250, see Table 12 to get acquainted especially with truss deflection requirements of SP. Table 12 below lists the most common situation during the WQ-truss design according to SP.

Table 12 Deflection limit for trusses, beams and floor structures [SP 20.13330.2011, part of Table E.1]

Construction elements	Requirements	Deflection limit	Actions
2. Beams, trusses, different floor structures, covers a) Visible parts Span length l, m: l = 24(12) l ≥ 36(24)	aesthetic and psychological	l/250 l/300	Permanent and long-term
b) With partition walls below the structure:	structural	Element deflection should not exceed the gap distance between a wall and the lower edge of an element. The gap between the lower surface of a member and a wall should not be more than 40 mm. In case, if this gap increases the stiffness of floor structure, the designer should avoid using larger gaps	Actions which reduces the gap between a wall and lower surface of a floor structure.

14 DESIGN ACCORDING TO EUROPEAN STANDARDS

14.1 Global frame analysis methods

The purpose of structural analysis is to obtain internal moments and forces.

Firstly, the analysis can be implemented as a global elastic analysis or global plastic analysis.

An elastic analysis is carried out based on linear stress-strain relation of steel, where in elastic case the stresses caused by applied forces of a structure are less than the yield strength of steel. (Luis Simoes da Silve, Rui Simoes, Helena Gervasio,Design of steel structures, 2010)
This method can be used in all cases, but design resistances of members can be estimated using a plastic capacity

Then, a plastic analysis allows material non-linear behavior (yielding), which leads to force redistribution from yielded parts to those that remain elastic. It is essential that a member should be able to develop a large deformation without a local buckling.

Secondly, analysis methods can be divided into 1st order or 2nd order. The first order analysis doesn't take into account the effect of deformation which occurred because of acting forces. In addition, applied forces are proportional to the deformations, so that a designer can apply the principle of superposition of effects to simplify calculations.

Figure 24 shows the first order analysis scheme.

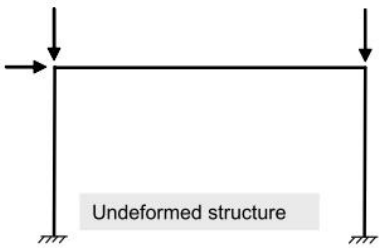

Figure 24 First order analysis

In contrast, the second order analysis considers all factors. High compressed structures and structures with low stiffness are more subjected to second order effects. The calculations are performed using iterative methods with suitable software.

Figure 25 illustrates the scheme of the second order analysis with P-δ effects.

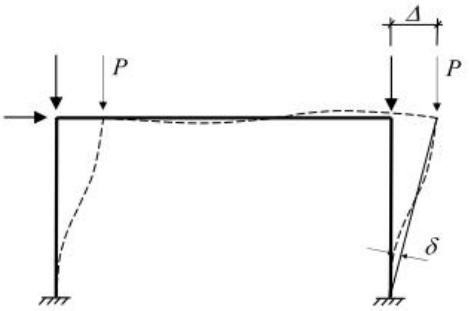

Figure 25 Second order analysis, P-δ effects (local effects), P-Δ effects (global effects)

To summarize everything above, practical differences in displacements one can see in Figure 26 below. In plastic cases material behavior is assumed to be without hardening.

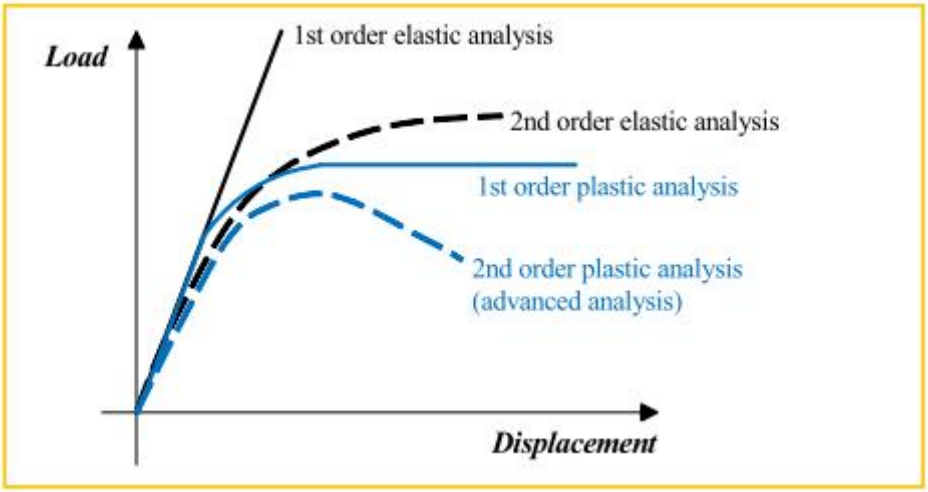

Figure 26 Types of analysis (European Erasmus Mundus Master Course, Conceptual Design of Buildings)

Being a floor or a roof structure, the WQ-truss is responsible for transmitting lateral loads to bracing elements of buildings (walls, diagonal bracings, etc.). Therefore, its internal forces depend quite a lot on horizontal effects acting on columns, though the WQ-truss itself is considered to have only local imperfections. This is why any of the analysis types above will give different results.

Besides, having a large number of points with different hogging and sagging moments in the upper chord opens great possibilities for the plastic analysis contrary to a usual truss where chords in most cases do not have any internal moments.

14.2 Elastic versus plastic analysis types

In the European standard there are two types of analysis in terms of stresses, deformations and forces: plastic and elastic.
The elastic analysis is based on a linear behavior of a member, so that in order to ensure the safety of a structure stresses should be less than yield strength (f_y) of steel.

The second type allows the plastic behavior of steel and redistribution of internal forces to other elements. After the material reaches its yield limit a plastic hinge is formed. Consequently a designer should use compact sections and ductile materials. The bending moment which can produce these stress diagrams is called plastic bending moment. The Figure 27 below shows the cross section behavior, where the last diagram reflects fully plasticized section.[8]

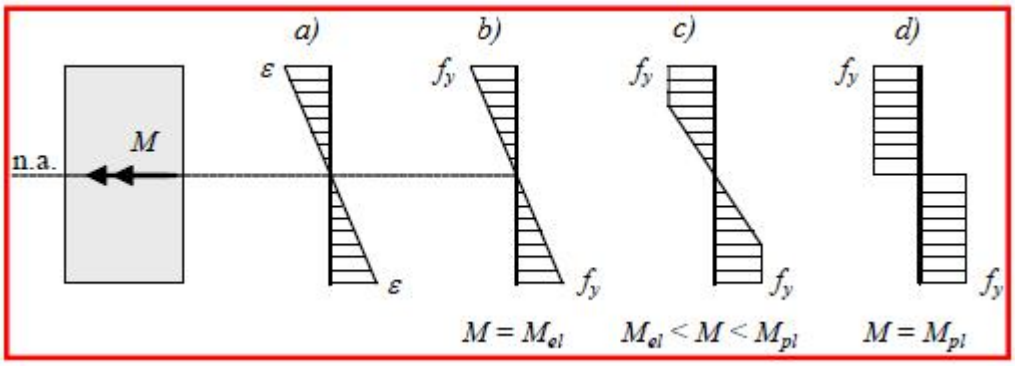

Figure 27 Cross section behavior. a) strain diagram in all cases b) stress diagram in elastic state c) elasto-plastic state d) plastic state (European Erasmus Mundus Master Course, Conceptual Design of Buildings)

14.3 Modeling

As it is stated in the standard, the distribution of axial forces in braced elements may be determined on the assumption that the members are connected by pinned joints.

Secondary moments at the joints, caused by the rotational stiffness of the joints, may be neglected both in the design of the bracing members and in the design of the joints, provided that the conditions specified in Eurocode 1993-1-8, clause 5.1.5 are satisfied.

Typical joints between the WQ-profile and hollow sections are called K-joint and Y-joint in the European standard. These names will help a designer to use the Table 7.8 of Eurocode, corresponding to that is one of the criteria needed for a pinned joint assumption as described in 5.1.5. Figure 28 shows the case of WQ-truss connections and gives explanations of geometrical data according to the Eurocode 1993-1-8.

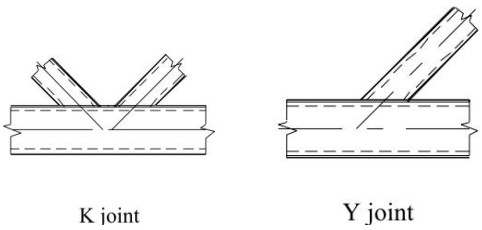

Figure 28 Types of joints [EN 1993-1-8, 7.1.2]

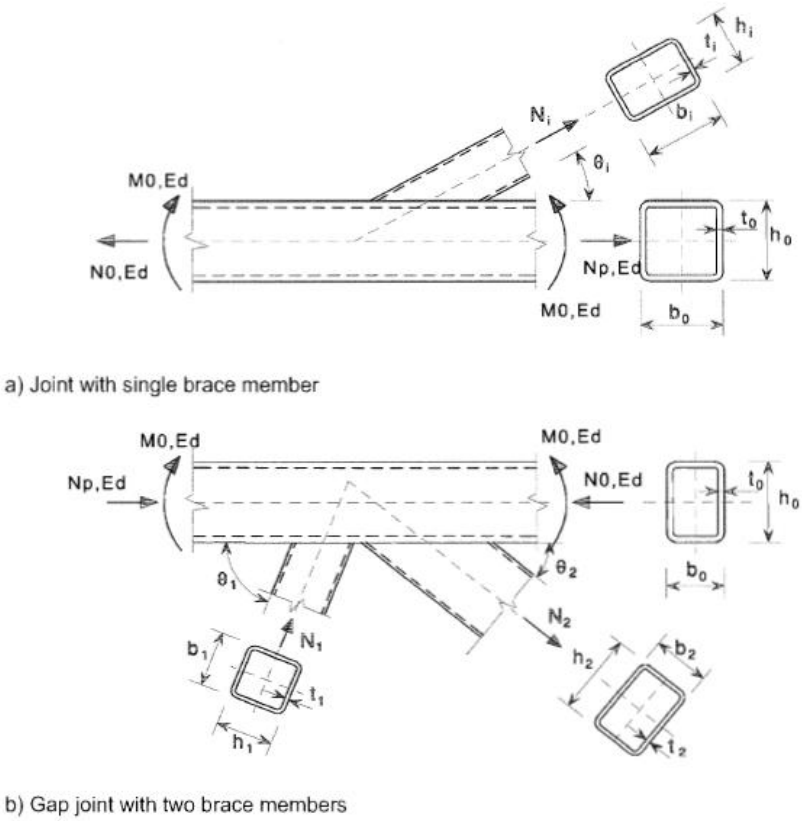

Figure 29 Explanation of geometrical data[EN 1993-1-8, Figure 1.4]

15 LOAD DETERMINATION

Different loads are considered with its own factor in the European norms: permanent, variable and accidental load types can be distinguished. For a better understanding of the load types see Table 13.

Table 13 Load classification

Load type, symbol	Eurocode 1990
Permanent, G	• self-weight of structures • fixed equipment • indirect actions • road surfacing • presteressing
Variable, Q	• imposed loads on building floors • beams and roofs • wind actions or snow loads • *certain actions, such as seismic actions and snow loads, may be considered as either accidental and/or variable actions, depending on the site location, see EN 1991 and EN 1998.
Accidental, A	• explosions • impact from vehicles

15.1 Load combinations

Typically, a European analysis of load combinations is implemented with unfavorable load combinations, where action values are reduced by using several factors.

15.1.1 Eurocodes

National Annex of Finland gives the following formulas for load combinations, where a designer should choose the infavorable one:

$$\begin{cases} 1,15\,K_{FI}\,G_{kj,sup} + 0,9\,G_{kj,inf} + 1,5\,K_{FI}\,Q_{k,1} + 1,5\,K_{FI}\sum_{i>1}\psi_{0,i}\,Q_{k,i} \\ 1,35\,K_{FI}\,G_{kj,sup} + 0,9\,G_{kj,inf} \end{cases}$$

[National Annex of Finland to Standard SFS-EN 1990, Table A1.2(B)(FI)]

K_{FI} gives extra safety taking into consideration consequence classes of buildings where the main factor is a loss of human life and economic, so-

cial and environmental consequences. Reliability classes are directly related to consequence classes.

Reliability class 3 means high consequence, class 2 means medium consequence and class 1 is low consequence.

- For reliability class 3 RC3, K_{FI}=1,1
- For reliability class 2 RC3, K_{FI}=1
- For reliability class 1 RC3, K_{FI}=0,9
  [National Annex of Finland to Standard SFS-EN 1990, Table A1.2(B)(FI)]

Ψ-factors are given in Table A1.1 in National Annex of Finland, Eurocode 1990.

16 SAFETY FACTORS

Generally, basic instructions concerning partial safety factors are given in Eurocode 1990, Basis of design. The main idea is that design load should be less than design resistance values.

The design load is determined by increasing the characteristic load by safety factor γ_n. This topic is highlighted above. Besides that characteristic resistance values should be decreased by safety factors which take into account geometrical and material properties of a profile, that factor is called γ_M.
The factor γ_M = 1,00 is used mainly for cross section resistance check.
Next factor γ_{M1} = 1,00 is applied in member stability check.
Last one, γ_{M2} =1,25, is used for design of resistance of cross-section in tension to fracture. [11]

17 SNOW LOAD DETERMINATION PROCESS

In order to find out the characteristic snow load value a designer should do the same procedure as in the Russian norms, where the roof shape, thermal transmittance and region influence the final result.

$s = \mu_i C_e C_t s_k$ [EN 1991-1-3, Chapter 5.2, 5.1]

Where:
μ_i – snow load shape coefficient
C_e – wind shield factor, usually $C_e = 1$, depends on topography
C_t – temperature factor, $C_t = 1$
s_k – snow load on ground

The snow load shape factor μ_i depends on the roof type and slope, the co-efficients takes into account the influence of wind, which can move snow and cause snow drifts.

These values μ_1 and μ_2 are applied when the snow is not prevented from sliding off the roof (no snow fences or other obstructions like parapets). If obstructions exist, the snow load shape coefficient should not be reduced below 0.8. Table 14 below represents the most common and simple cases which are shown here to point out that it looks similar to the Russian norms. More complicated situations are described in Eurocode 1991-1-3.

Table 14 Snow load shape coeficient [EN 1991-1-3, Chapter 5.3]

Roof and load scheme	Coefficient μ
Mono-pitched and pitched roofs 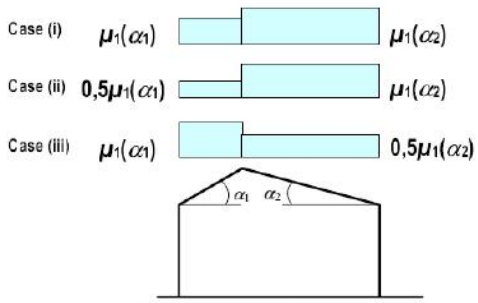 Figure 5.3: Snow load shape coefficients - pitched roofs	From the diagram below it is easy to find shape coefficient. 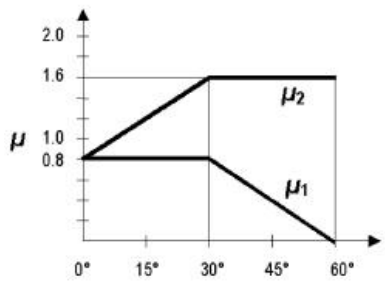
Multi-span roofs	

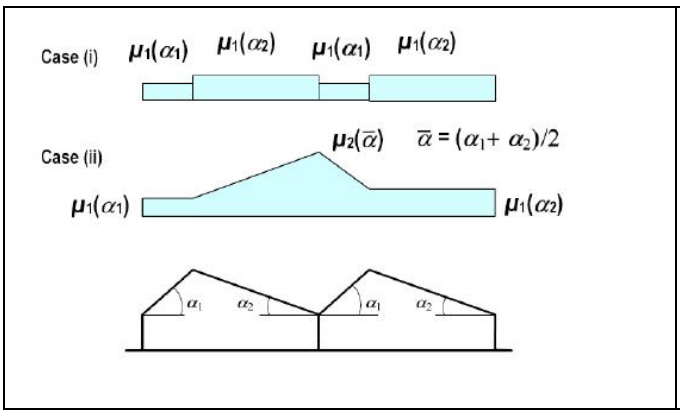

After the shape factor is determined, it is required to choose the correct characteristic load. In fact, it is influenced by National Annexes, for example in Finland a zoning National map was created. It is obvious that depending on the location different snow load values can be found, see Figure 30 below.

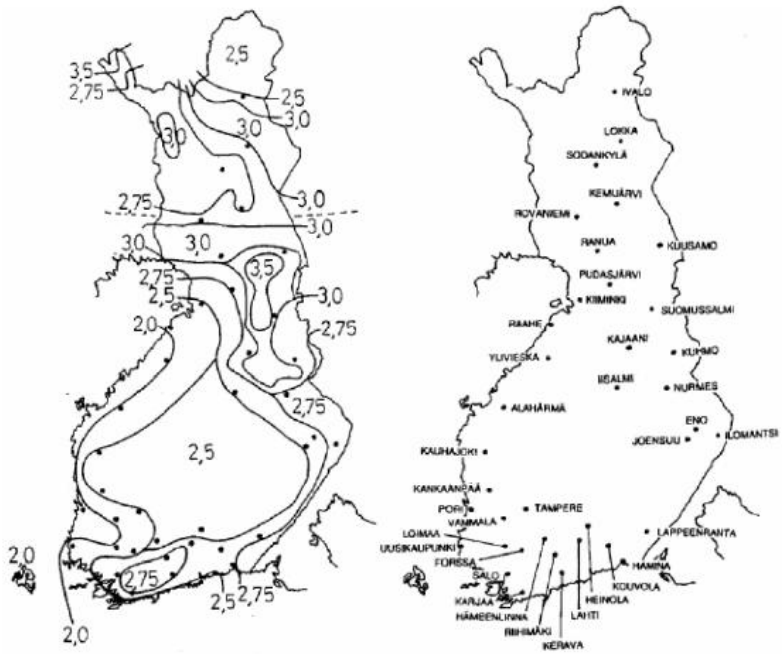

Figure 30 Snow load on ground in Finland [NA EN 1993-1-3]

In purpose to summarize all the information above, see the flowchart, where snow load determination methods are described very clear.(Figure 31)

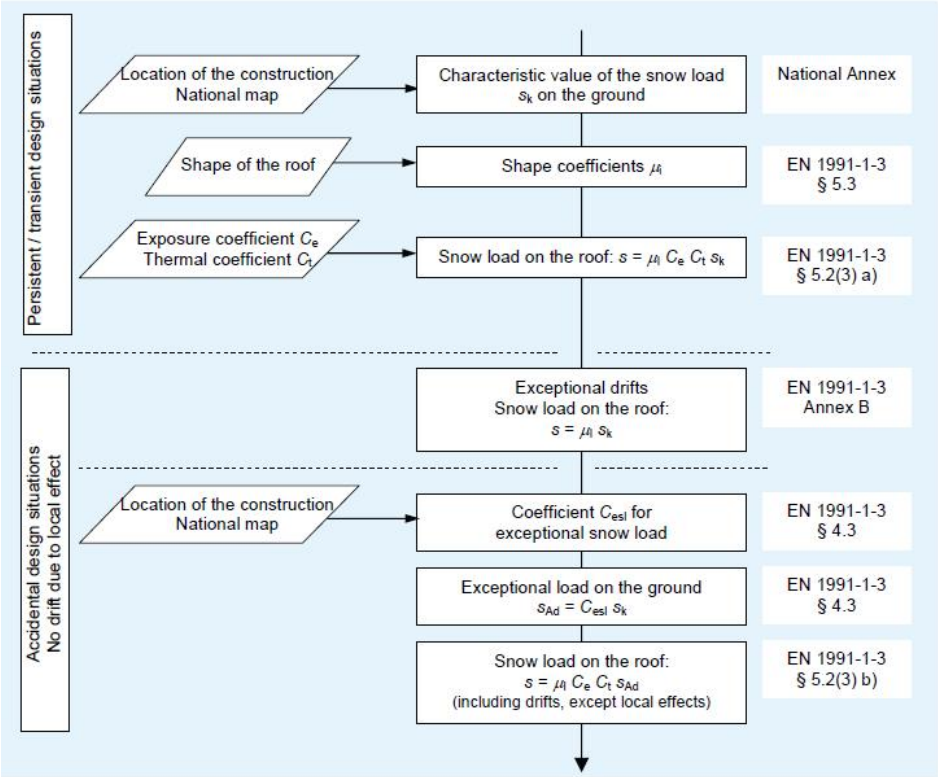

Figure 31 Snow load determination process according to Eurocodes (http://sections.arcelormittal.com/fileadmin/redaction/4-Library/4-SBE/EN/SSB03_Actions.pdf)

18 WIND LOAD

18.1 Wind force

The general formula of wind force acting on a structure or on an element is shown below:

$$Fw = c_s\, c_d\, c_f\, q_p(z_e)\, A_{ref}$$ [EN 1991-1-4, Chapter 5.3, 5.3]

The first step is to the find peak velocity pressure, which is represented as $q_p(z_e)$. It depends on the terrain type, reference height and basic wind velocity, which can be found in the National Annex. The whole procedure of finding the peak velocity pressure is time-consuming. In Finland it is possible to use the simplified diagram from RIL 201-1-2011, chapter 4.5.5. The Figure 32 represents the diagram from RIL.

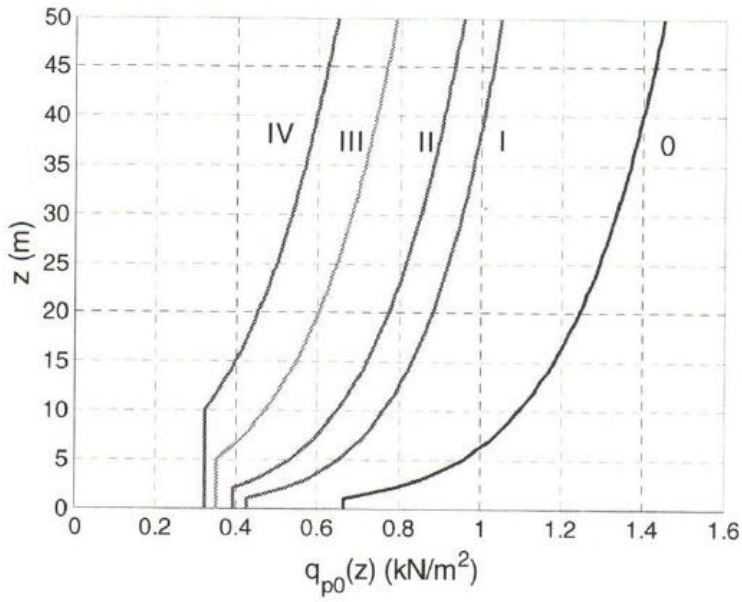

Figure 32 Peak velocity pressure (RIL 201-1-2011)

Factor $c_s c_d$ may be taken as 1 if the height of the building is less than 15m, for more difficult cases see Eurocode 1991-1-4 Chapter 6.3.1.

Coefficient c_f takes much time to be calculated according to Eurocodes. Thus, it is less complicated to use a simplified method according to RIL 201-1-2011, chapter 5.2.5. This coefficient can be seen on the Figure 33.

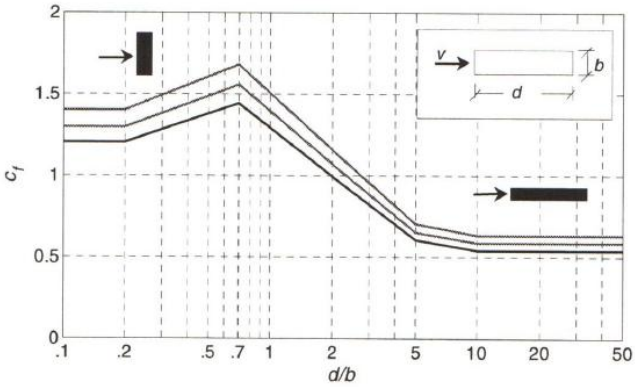

Figure 33 Force coefficient diagram (RIL 201-1-2011)

This graphic is applied when slenderness is less than 10m.

- When h<15 m, λ =2h/b
- When h50 m, λ =1.4h/b
- When 15m < h < 50m values are interpolated
  The table from RIL is provided below. Table 15 may also be applied in purpose to find the force coefficient:

Table 15 Force coefficient table (RIL 201-1-2011)

	d/b								
λ	0,1	0,2	0,5	0,7	1	2	5	10	50
≤ 1	1,2	1,2	1,37	1,44	1,28	0,99	0,60	0,54	0,54
3	1,29	1,29	1,48	1,55	1,38	1,07	0,65	0,58	0,58
10	1,40	1,40	1,60	1,68	1,49	1,15	0,70	0,63	0,63

The reference area A_{ref} is the area of a component perpendicular to the acting wind force.

18.2 Wind external and internal pressure

In a practical approach, a designer should usually have information about internal and external pressure values to know how much pressure is applied to load bearing structures, small elements and fixings. A direct pressure is taken commonly as positive and suction as negative. These values can be found by multiplying the peak velocity pressure on internal or external pressure coefficients. The pressure factors can be obtained from the tables, Chapter 7 of the Eurocode 1991-1-4.

$w_e = q_p(z_e)c_e$ [EN 1991-1-4, Chapter 5.2.1, 5.1]

$w_i = q_p(z_i)c_i$ [EN 1991-1-4, Chapter 5.2.2, 5.2]

It is necessary to point out that factor $c_{pe,1}$ is applied to small elements and fixings and $c_{pe,10}$ is used for an overall load bearing structure.

19 CROSS SECTION CLASSIFICATION

Generally, the method offered in the European standard suggests finding a cross section class of each profile to check the cross section stability. On the other hand, the classification procedure is essential to choose the method of global analysis: plastic or elastic.

If flanges and webs are considered separately, it is clear that these elements are relatively thin and subjected to local buckling. Thereby, this aspect influences the load-carrying capacity. (Steel Buildings - British Constructional Steelwork Association)

The consequences of local buckling are visible in Figure 34.

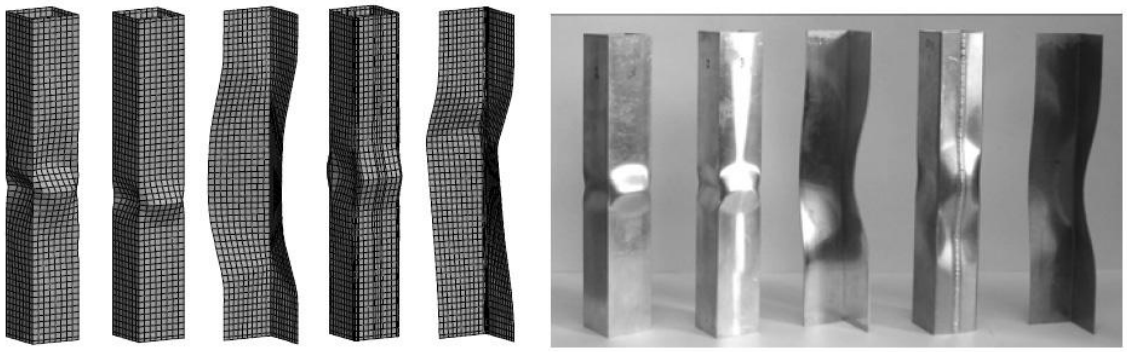

Figure 34 Examples of local buckling effect (https://www.tue.nl/en/university/departments/built-environment/research/units/structural-design/research/completed-phd/local-buckling-of-slender-aluminium-sections-exposed-to-fire/)

Altogether, there are four types of cross sections which characterize the behavior of an element.

Table 16 Cross section classes [EN 1993-1-1, clause 5.5]

Cross section class 1	Cross section class 1 represents those profiles which can form a plastic hinge with the rotation capacity required from plastic analysis without reduction of the resistance
Cross section class 2	Cross-sections which belong to cross section class 2 are those which can develop their plastic moment resistance, but have limited rotation capacity because of local buckling.
Cross section class 3	Cross-sections which can be considered as cross section class 3 are those in which the stress in the extreme compression fibre of the steel member assuming an elastic distribution of stresses can reach the yield strength, but local buckling is liable to prevent development of the plastic moment

	resistance.
Cross section class 4	Cross sections which correspond to cross section class 4 are those in which local buckling will occur before the attainment of yield stress in one or more parts of the cross-section.

For a common profile all elements should be checked: bottom flange, upper flange and web. These calculations must be implemented according to Eurocode 1993-1-1, Chapter 5.6, where appropriate tables with comparable values can be found.

In Eurocode 1993-1-1 cross section class classification is done by using a table. It consists of three sheets which include information about internal compression parts, outstand flanges and angular and tubular sections.

Also, the steel strength factor should be found according to the formula:

$$\varepsilon = \sqrt{\frac{235}{f_y}}$$

[EN 1993-1-1, Chapter 5.6, Table 5.2]

After the calculation part, a designer chooses the least favorable cross section class.

19.1 WQ-beam cross section check

As it is stated in TRY Steel Standard Card No 21/2009, WQ-beam flanges and web are usually so thick that the profile belongs to cross section class 1 or 2. Sometimes the WQ-profile is so asymmetric that a plastic neutral axis is located near the bottom flange; in this case a designer can deal with cross section categories 3 or 4.[4]

The cross section with web of cross section class 3 and flanged of class 1 or class 2 can be classified as cross section class 2 using the method of effective webs. For more clear information about effective parts see the diagrams below in Figure 35.

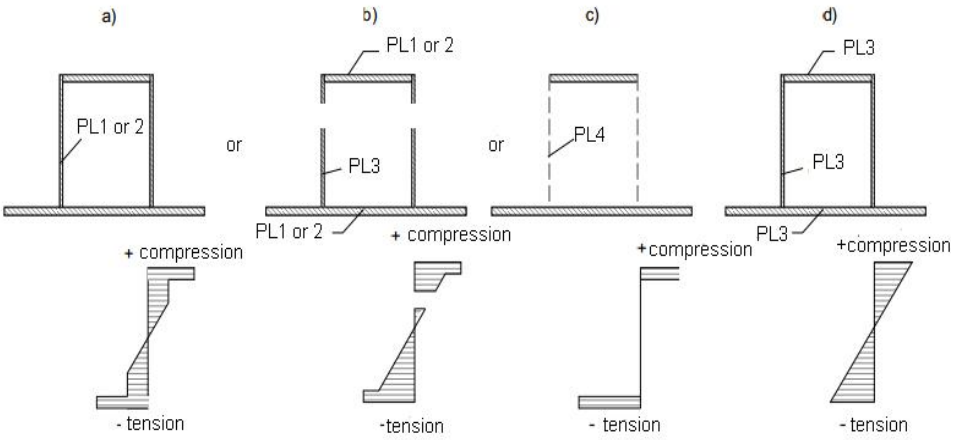

Figure 35 Effective parts of WQ-beam[4]

20 DESIGN CONSIDERATIONS, ULTIMATE LIMIT STATE

20.1 Cross section resistance

In the European standard the main point and condition is the that design effect value has to be less than the design resistance value. This logic is applied in cross section and member stability checks.

20.1.1 Tension and compression

Tension and compression resistances of steel profiles should be more than design normal force acting on a profile.

$$\frac{N_{Ed}}{N_{t,Rd}} \leq 1{,}0$$

[EN 1993-1-1, Chapter 6.2.3, 6.5]

$$\frac{N_{Ed}}{N_{c,Rd}} \leq 1{,}0$$

[EN 1993-1-1, Chapter 6.2.4, 6.9]

Tension resistance formulas will be mostly applied to the design of bracings of the WQ-truss system and for the bottom chord.

$$N_{u,Rd} = \frac{0.9 A_{net} f_u}{\gamma_{M2}}$$

[EN 1993-1-1, Chapter 6.2.3, 6.7]

$$N_{pl,Rd} = \frac{\mathrm{A} f_u}{\gamma_{M0}}$$

[EN 1993-1-1, Chapter 6.2.3, 6.6]

Compression resistance check has to be provided for the upper chord and bracings.

$$N_{c,Rd} = \frac{\mathrm{A} f_u}{\gamma_{M0}}$$

[EN 1993-1-1, Chapter 6.2.4, 6.10]

$$N_{c,Rd} = \frac{\mathrm{A}_{\mathrm{eff}} f_u}{\gamma_{M0}}$$

[EN 1993-1-1, Chapter 6.2.4, 6.11]

As one may see, the main purpose of these formulae is to prevent material yielding, which will lead to a failure. In case of tension, plastic behavior may be allowed, while possible fracture is sometimes more important for sections with holes.

20.1.2 Bending moment

The values of design bending moment resistance and design bending moment should satisfy the following equation:

$$\frac{M_{Ed}}{M_{c,Rd}} \leq 1{,}0$$

[EN 1993-1-1, Chapter 6.2.5, 6.12]

Design moment resistances formulas for a selected cross section class are provided below.
First and second cross section classes:

$$M_{c,Rd} = \mathrm{M_{pl,Rd}} = \frac{\mathrm{W_{pl} f_y}}{\gamma_{\mathrm{M0}}}$$

[EN 1993-1-1, Chapter 6.2.5, 6.13

Third cross section class:

$$M_{c,Rd} = \mathrm{M_{el,Rd}} = \frac{\mathrm{W_{el,min}\ f_y}}{\gamma_{\mathrm{M0}}}$$

[EN 1993-1-1, Chapter 6.2.5, 6.14]

Fourth cross section class:

$$M_{c,Rd} = \frac{\mathrm{W_{eff,min}\ f_y}}{\gamma_{\mathrm{M0}}}$$

[EN 1993-1-1, Chapter 6.2.5, 6.15]

Again, the main idea is to avoid excessive yielding. But in this case, local buckling is also taken into consideration by introducing cross-section classes. The section types 1 and 2 will lose their capacity by reaching the yield limit within the whole section. As for the classes 3 and 4, the resistance is limited due to local buckling, in other words, poor rotational capacity. To avoid the derivation of complicated formulae for the plate buckling phenomena, it was agreed to limit the capacity of section type 3 to the initiation of plastic deformations. Generally, the tests have shown that no plate buckling phenomenon happen while a class 3 section remains elastic. Unfortunately, it cannot be achieved for the type 4. Therefore, if a designer wants to use it, he has to apply the Eurocode 1993-1-5 to account buckled parts of a cross-section that are called “ineffective”.

20.1.3 Shear strength

Shear design is implemented in the same way; each cross section should satisfy the following expression:

$$\frac{V_{Ed}}{V_{c,Rd}} \leq 1{,}0$$

[EN 1993-1-1, Chapter 6.2.6, 6.17]

This thesis doesn't cover torsion. Therefore, according to the Eurocode 1993-1-1, the plastic shear resistance can be found from the equation below:

$$V_{pl.Rd} = \frac{A_v(\frac{f_y}{\sqrt{3}})}{\gamma_{M0}}$$

[EN 1993-1-1, Chapter 6.2.6, 6.18]

Where A_v is the shear area; this information can be found in Chapter 6.2.6.

Steel is a very ductile material that has an identical resistance to tension and compression. As we know from the principal stress theory, pure shear loading is represented by normal stresses inclined by the angle of 45 degrees as it is shown in Figure 36.

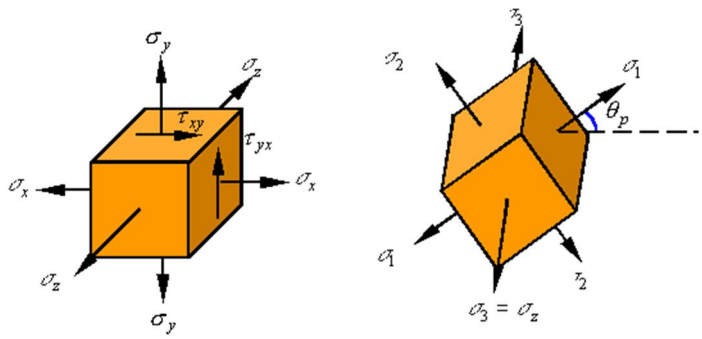

Figure 36 Illustration of principal stresses: left – a section part loaded with shear, normal and transverse stresses; right – "resultant", principal stresses in that part (http://emweb.unl.edu/NEGAHBAN/Em325/16-Mohr%27s-circle/Mohr%27s%20circle.htm)

In Figure 36 above it is notable that besides the tension principal stress sigma 1, there also exists the same magnitude compression which is normal to the tension (sigma 2).

As stated above, usually this does not matter for steel, because there is no difference whether the shear failure occurs because of tension, or compression (the resistance is equal). However, if an element is slender enough, compression becomes vital since a local buckling may happen, a so-called "shear buckling".

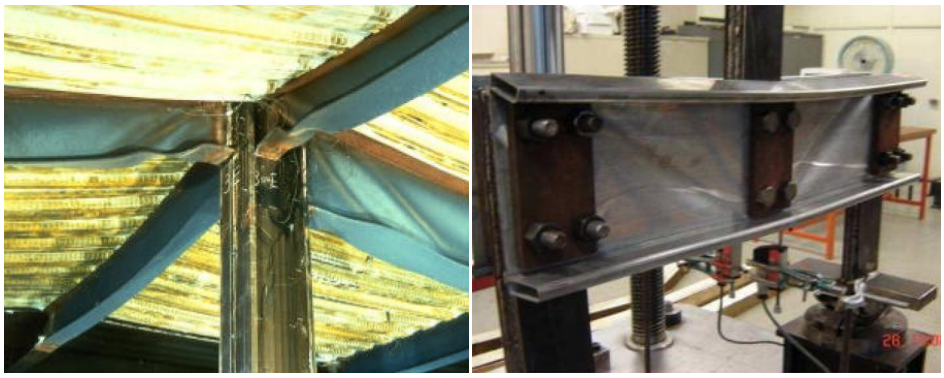

Figure 37 Shear buckling examples.
(http://911research.wtc7.net/mirrors/guardian2/fire/SCI.htm
http://www.amirkari.com/SS22.aspx)

In Figure 37 the reader may see that a local buckling happened because of 45 degrees compression caused by almost pure shear

So, if a web is slender enough, a designer must again apply to EC1993-1-5 to consider shear buckling.
This should be done if the following inequality is true for an element:

$$\frac{h_w}{t_w} > 72\varepsilon/\eta$$

[EN 1993-1-1, Chapter 6.2.6, 6]

Where η = 1
As far as the local buckling is accounted by the expression above, there is no reason not to utilize the full plastic capacity of the material for not slender webs. This is why the standard gives the formula for plastic resistance, where almost the whole web is covered by the principal stress equal to its yield strength.

Nevertheless, if a designer does not want to have plastic deformation, shear resistance may be limited to the initiation of yielding by using the formula based on von Misses yield criteria that is more suitable for ductile materials than the theory of principal stresses:

$$\frac{\tau_{Ed}}{f_y/(\sqrt{3}\gamma_{M0})} \leq 1$$

[EN 1993-1-1, Chapter 6.2.6, 6.19]

If this criterion is not satisfied buckling verification should be implemented according to section 5, Eurocode 1993-1-5.

20.1.4 Combined bending and axial force

An equally important aspect is the design of a structure with a combined axial force and bending moment. Due to additional normal force, the yielding of an element happens earlier because the stress level reaches the critical point earlier. For elastic verification it is very easy to combine stresses form bending and axial force and then compare the maximum value with the yield strength. Unfortunately, the procedure becomes iterative when material plasticity is accounted; therefore, the standard offers a simplification method. Plastic bending moment resistance should be reduced by special factors or it is possible to use a simplified method which is shown below:

$$\frac{N_{Ed}}{A_{eff}\, f_y/\gamma_{M0}} + \frac{M_{y,Ed} + N_{Ed}\, e_{Ny}}{W_{eff,y,min} f_y/\gamma_{M0}} + \frac{M_{z,Ed} + N_{Ed}\, e_{Nz}}{W_{eff,z,min} f_y/\gamma_{M0}} \leq 1$$

[EN 1993-1-1, Chapter 6.2.9, 6.44]

20.1.5 Combined bending, shear and axial force

For the purpose of estimating the structure exposed to the combination of bending, shear and normal forces the designer can use the simplified check of bending and axial forces. But yield strength of steel has to be reduced in case of design shear force which exceeds half of the design shear strength. Again, it is very easy to perform an elastic verification, but for the plastic resistance one has to use simplifications.

In Eurocode is stated that if shear force is less than half of the plastic shear resistance its effect of bending moment is neglected.[EN 1993-1-1, clause 6.2.8] Otherwise a designer has to reduce the design moment resistance by reducing the yield strength of steel:

$(1-\rho)\, f_y$ [EN 1993-1-1, Chapter 6.2.10, 6.45]

20.2 Member stability check

20.2.1 Buckling resistance of members in compression

Nowadays, in modeling of structural analysis a building is assumed to consist of idealized elements, e.g. beams, columns, walls represented by either straight lines or shell elements. However, this does not fairly correspond to reality, as far as there will never be a perfectly straight steel element. This is why a compressed steel member usually loses the capacity before the estimated value of compressed stress has reached the yield limit according to the section resistance in compression.

These effects of «inidealization» can be accounted by applying a certain local imperfection value and performing a full second order analysis. Ob-

viously, this leads to quite a high amount of laborious work since there are plenty of compressed elements in a building.

This is why the standard offers a simplification procedure in order for a designer to ignore local imperfections pδ – effects in global analysis. It is achieved via introducing a special term which is called buckling.

Buckling means an element failure resulting from the stress exceeding the critical (yield) value due to initial local imperfections and pδ – effects.

As far as the imperfections influence not only the compression resistance different buckling types are introduced by EC3. The main idea is to derive the maximum allowed designed force for a subjected member based on reducing its idealized (section) resistance with a safety factor that depends on the degree of imperfections and manufacturing method. The resulting value is called member buckling resistance and is written with the index b which means buckling. According to EC3 in order for an element not to fail in the flexural buckling manner (resulting from pure compression) it should satisfy the following equation:

$$\frac{N_{Ed}}{N_{b,Rd}} \leq 1{,}0$$

[EN 1993-1-1, Chapter 6.3.1.1, 6.46]

Cross section classes 1,2 and 3:

$$N_{b,Rd} = \frac{\chi A f_y}{\gamma_{M1}}$$

[EN 1993-1-1, Chapter 6.3.1.1, 6.47]

Cross section class 4:

$$N_{b,Rd} = \frac{\chi A_{eff} f_y}{\gamma_{M1}}$$

[EN 1993-1-1, Chapter 6.3.1.1, 6.48]

20.2.2 Member check in bending and axial compression in different directions

Even in an idealized design situation elements are quite rarely subjected to pure compression. There is always some bending moment resulting from, for example, the self-weight of diagonal bars or the eccentricity in a beam-to-column joint. The formulas above are based on the second order effects due to the moment of initial local initial imperfections only. The more additional external bending moments are introduced, the less those expressions correspond to the reality.

Therefore, the accounting of local imperfections in a simplified (formula based) manner must depend on the simultaneous action of axial forces and bending moments with their respect to idealized section resistances.

Eurocode 3 treats this phenomenon by giving the equations below. It must be noted that they are not necessary when the full second order analysis is performed.

$$\frac{N_{Ed}}{\frac{\chi_y\, N_{Rk}}{\gamma_{M1}}} + k_{yy}\frac{M_{y,Ed} + \Delta M_{y,Ed}}{\frac{\chi_{LT}\, M_{y,Rk}}{\gamma_{M1}}} + k_{yz}\frac{M_{z,Ed} + \Delta M_{z,Ed}}{\frac{\chi_{LT}\, M_{z,Rk}}{\gamma_{M1}}} \leq 1$$

[EN 1993-1-1, Chapter 6.3.3, 6.61]

$$\frac{N_{Ed}}{\frac{\chi_z\, N_{Rk}}{\gamma_{M1}}} + k_{zy}\frac{M_{y,Ed} + \Delta M_{y,Ed}}{\frac{\chi_{LT}\, M_{y,Rk}}{\gamma_{M1}}} + k_{zz}\frac{M_{z,Ed} + \Delta M_{z,Ed}}{\frac{\chi_{LT}\, M_{z,Rk}}{\gamma_{M1}}} \leq 1$$

[EN 1993-1-1, Chapter 6.3.3, 6.62]

21 DESIGN CONSIDERATIONS, SERVICEABILITY LIMIT STATE

Based on National Annex of Finland SFS-EN 1993-1-1, see Table 16 for maximum deflections for different cases.

Table 17 Deflection limitation

Case	w
Roof girders	L/300
Floors girders	L/400
Cantilevers	L/150

Where
L – span length
w – the deflection limit

22 COMPARISON

After the theoretical part of this study it is logical to make a small comparison of the Russian and European standards.

22.1 Calculation methods

In purpose to perform a structural analysis of WQ-truss system and get more precise results it is better to use software. The calculations were implemented by an Autodesk Robot Structural Analysis Professional 2015.The main goal is to compare stresses in structural members and resistances. The results and conclusions will be based on these calculation results.

22.2 General dimensions

The truss is depicted on Figure 25, which is 15 meters long and 1.2 meter high. The bar numbers are shown below in Figure 38.

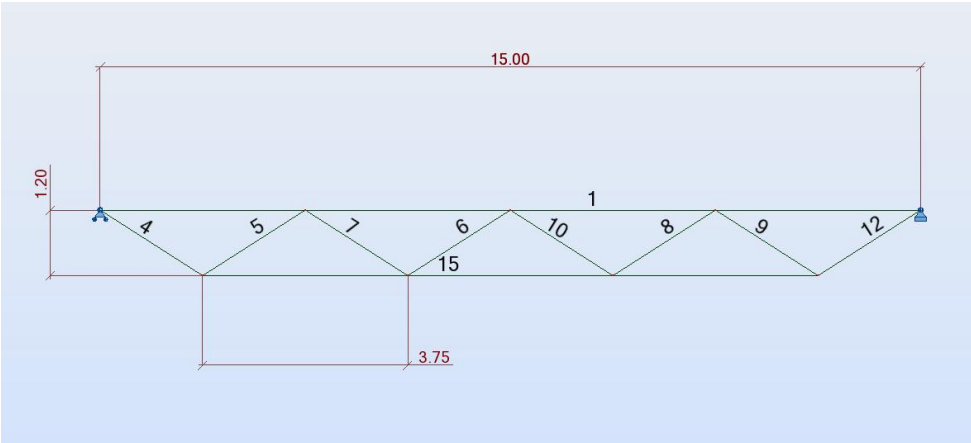

Figure 38 Truss model

The cross section dimensions of the WQ-beam is provided below in Figure 39.

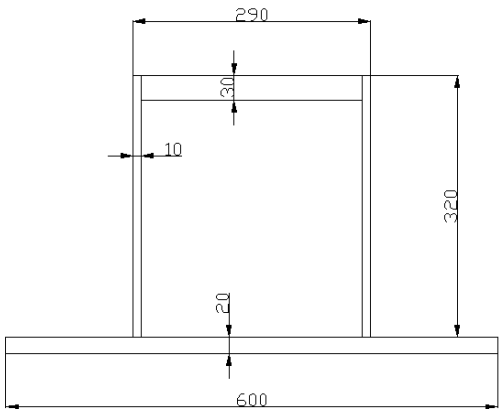

Figure 39 The cross section of the WQ-beam in WQ-truss system

For bracings it is wise to use hollow sections 200mm*120mm with a thickness of 8 mm. Additionally, a steel plate PL60*300 is used as a bottom chord. Steel grade is S355 for all beams.

Figure 40 represents a 3D model of WQ-truss created in Autodesk Robot Structural Analysis Professional 2015 which will be used for the comparison.

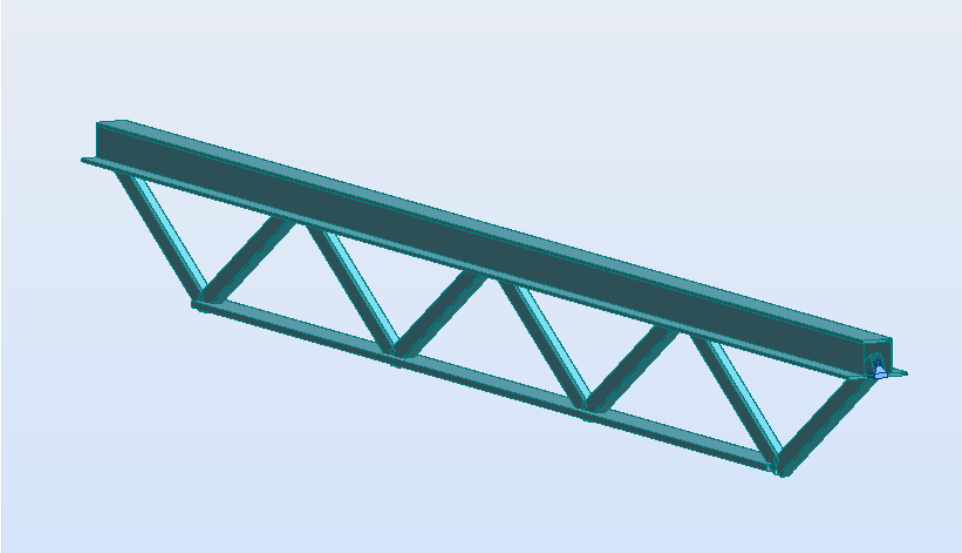

Figure 40 WQ-truss 3D model

22.3 Conditions

This truss is loaded by hollow core slabs whose length is 6m. The main dimensions can be seen in Figure 41.

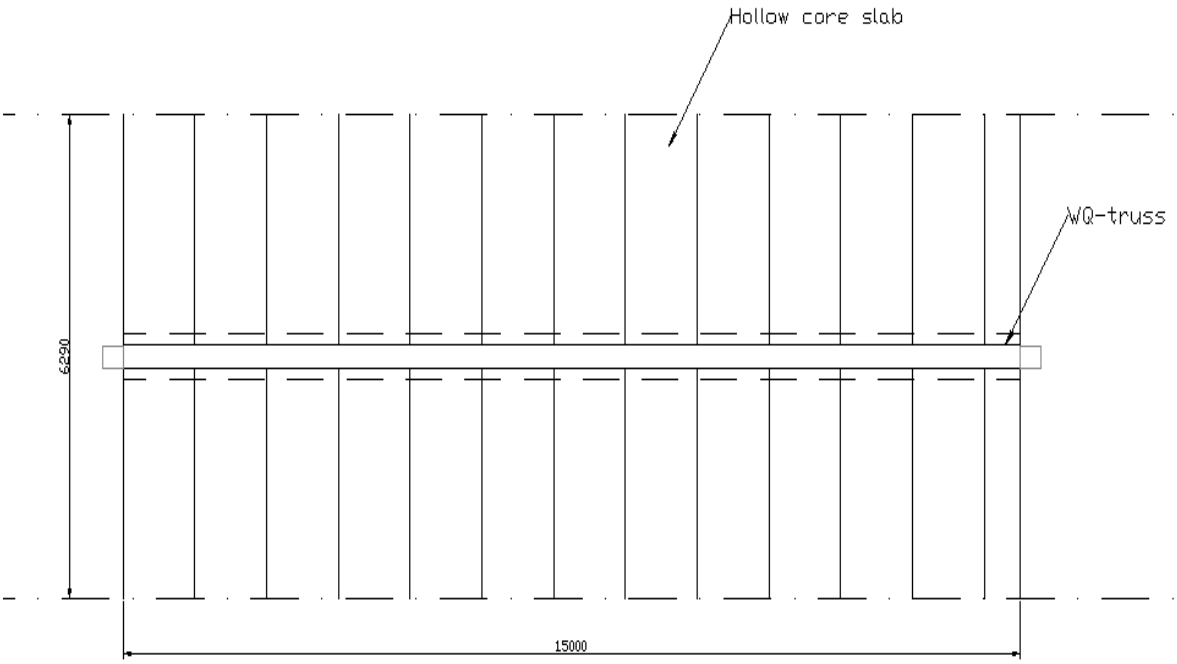

Figure 41 Loading conditions

The dead load which is caused by the self-weight, ceiling finishing of the structure and hanging load because of HVAC appliances is g = 6 kN/m^2. Then, live load is q = 4 kN/m^2.

The loading width is 6.290 m and loading length is 15 m.

22.4 Stresses

22.4.1 Eurocodes, Ultimate limit state

Firstly, there are two combinations in the ultimate limit state according to the National Annex of Finland to Eurocode 1990 with the corresponding combination factors.

Beams which are highlighted in yellow color are in compression and red ones are in tension. Figures 42 and 43 illustrate two loading cases.

The first combination considers the case 6.10a according to the Eurocodes and the second one considers the case 6.10b.

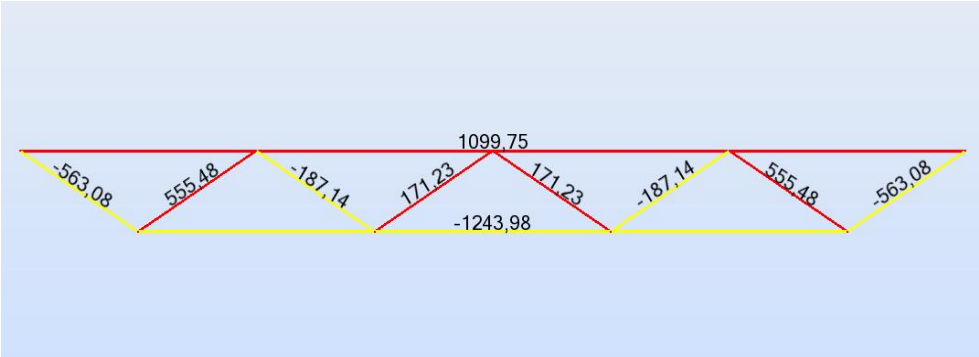

Figure 42 Axial forces according to case 6.10a

E

Figure 43 Axial forces according to case 6.10b

The bending moment diagrams are shown in Figures 44 and 45.

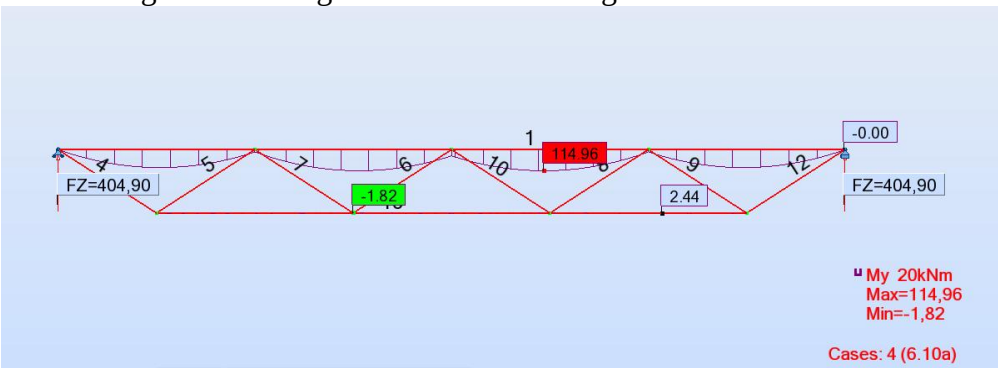

Figure 44 Bending moment diagram according to case 6.10a

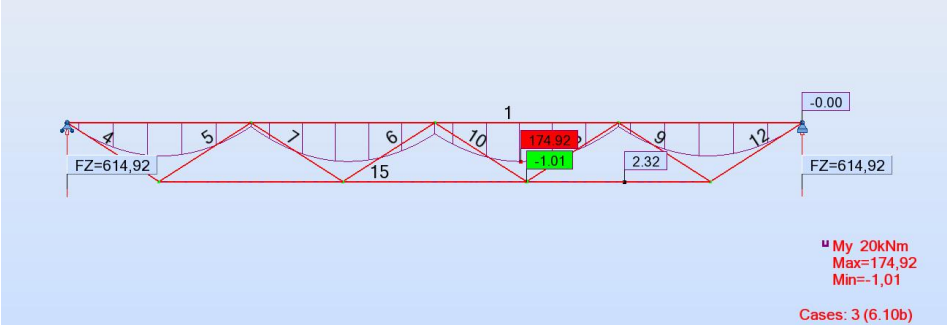

Figure 45 Bending moment diagram according to case 6.10b

It is obvious that the second case is the critical one and the comparison will be based on the results of this situation.

22.4.2 Eurocodes, serviceability limit state

The serviceability state results are given in Figure 46. The maximum deflection according to the Eurocodes is 2.5cm

.

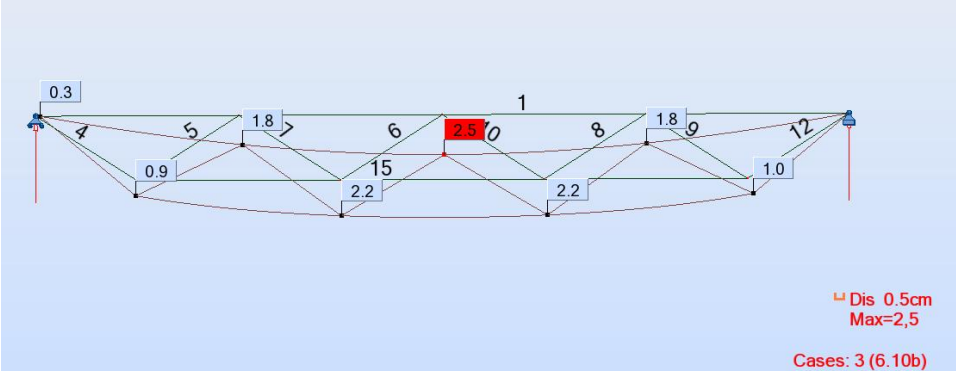

Figure 46 Deflection diagram

22.4.3 Russian standard, ultimate limit state (first limit state)

The load combination according to the Russian standard gives smaller axial forces. This aspect can be explained by the difference by the little differences during the load determination processes.

The results can be seen in Figure 47, where the axcial force diagram is shown.

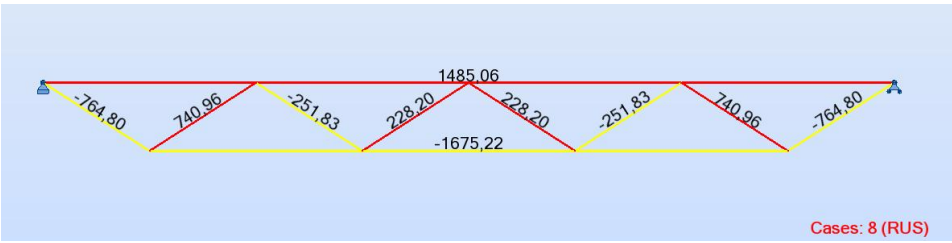

Figure 47 Axial forces

The next thing is the difference in maximum bending moments. It can be concluded that it can be compared with the situation with axial forces. The dissimilarity in loading conditions leads to smaller bending moments. But this is not a critical difference in standards.

The maximum bending moment is 150kNm what is about 20kNm less than in the previous calculations.

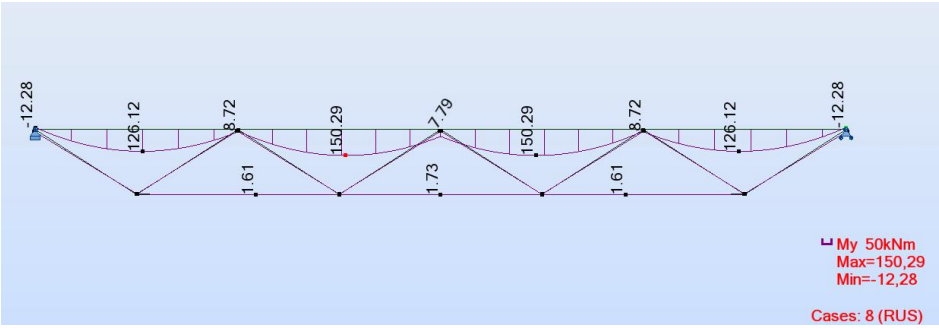

Figure 48 Bending moment diagram

22.4.4 Russian standard, serviceability limit state (second limit state)

The deflections according to the SP are smaller than in calculations according to the Eurocodes. The results can be seen in Figure 49 below.

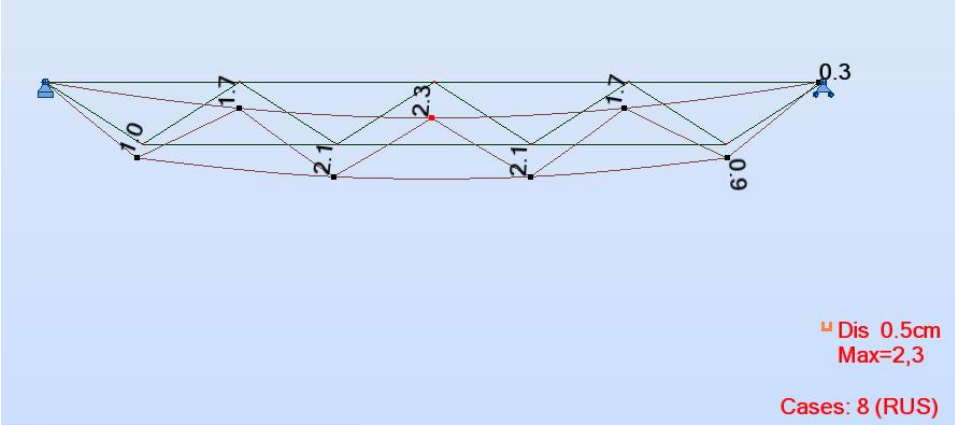

Figure 49 Deflection diagram

22.5 Resistances

Tables 18 and 19 below represent the verification of members step by step and it can be pointed out that the verification values differ a little bit but the methods are the same. The main idea is that effect values should be less than resistance values.

In both cases chosen the sections satisfy the requirements of standards but capacity usage ratios are not similar.

Table 18 Resistances according to the European norms

Bar num-ber	Value (case 6.10b)
1	Section strength check: $N_{Ed}/N_{c,Rd} = 0.14 < 1.00$ (6.2.4.(1)) $M_{y,Ed}/M_{y,c,Rd} = 0.13 < 1.00$ (6.2.5.(1)) $M_{y,Ed}/M_{N,y,Rd} = 0.13 < 1.00$ (6.2.9.1.(2)) $V_{z,Ed}/V_{z,c,Rd} = 0.00 < 1.00$ (6.2.6.(1)) Global stability check of member: $\lambda_y = 26.23 < \lambda_{max} = 210.00$ $\lambda_z = 25.29 < \lambda_{max} = 210.00$ $N_{Ed}/(\chi_y*N_{Rk}/\gamma_{M1}) + k_{yy}*M_{y,Ed,max}/(\chi_{LT}*M_{y,Rk}/\gamma_{M1}) = 0.25 < 1.00$ (6.3.3.(4)) $N_{Ed}/(\chi_z*N_{Rk}/\gamma_{M1}) + k_{zy}*M_{y,Ed,max}/(\chi_{LT}*M_{y,Rk}/\gamma_{M1}) = 0.15 < 1.00$ (6.3.3.(4))
15	Section strength check: $N_{Ed}/N_{t,Rd} = 0.31 < 1.00$ (6.2.3.(1)) $M_{y,Ed}/M_{y,c,Rd} = 0.02 < 1.00$ (6.2.5.(1)) $M_{y,Ed}/M_{N,y,Rd} = 0.03 < 1.00$ (6.2.9.1.(2))
6	Section strength check: $N_{Ed}/N_{c,Rd} = 0.16 < 1.00$ (6.2.4.(1)) Global stability check of member: $\lambda,_y = 31.06 < \lambda,max = 210.00$ $\lambda,_z = 46.18 < \lambda,max = 210.00$ $N_{Ed}/N_{b,Rd} = 0.20 < 1.00$ (6.3.1.1.(1))
12	Section strength check: $N_{Ed}/N_{t,Rd} = 0.52 < 1.00$ (6.2.3.(1))

Table 19 Resistances according to Russian norms

Bar number	Analysis
1	Section check

	Web: $\lambda_w / \lambda_{uw} = 0.44 < 1.0$; Flange: $\lambda_f / \lambda_{uf} = 0.29 < 1.0$ [9.4] $sqrt(\sigma^2 + 3.0*\tau_{z,max}^2)*0.87/(R_y*\gamma_{c1}/\gamma_n) = 0.32 < 1.00$ [8.2.1-(44)] $\tau_{z,max} / (R_s*\gamma_{c1}/\gamma_n) = 0.00 < 1.00$ [8.2.1-(42)] Member stability check $\lambda_y = 23.77 < \lambda_{y,max} = 150.00$ $\lambda_z = 35.67 < \lambda_{z,max} = 150.00$ [10.4.1] $N/(F_{iey}*A*R_y*\gamma_{c2}/\gamma_n) = 0.38 < 1.00$ [9.2.2-(109)] $N/(F_{iez}*A*R_y*\gamma_{c2}/\gamma_n) + M_y/(c_y*d_y*W_y*R_y*\gamma_{c2}/\gamma_n) = 0.41 < 1.00$ [9.2.10-(120)]
15	Section check $sqrt(\sigma^2 + 3.0*\tau_{z,max}^2)*0.87/(R_y*\gamma_{c1}/\gamma_n) = 0.30 < 1.00$ [8.2.1-(44)] $\tau_{z,max} / (R_s*\gamma_{c1}/\gamma_n) = 0.01 < 1.00$ [8.2.1-(42)] <u>Member stability check</u> $\lambda_y = 216.51 < \lambda_{y,max} = 250.00$ $\lambda_z = 43.30 < \lambda_{z,max} = 250.00$ [10.4.2]
6	Section check Web: $\lambda_w/\lambda_{uw} = 0.35 < 1.0$; Flange: $\lambda_f/\lambda_{uf} = 0.39 < 1.0$ [9.4] $sqrt(\sigma^2 + 3.0*\tau_{z,max}^2)*0.87/(R_y*\gamma_{c1}/\gamma_n) = 0.23 < 1.00$ [8.2.1-(44)] $T_{z,max} / (R_s*\gamma_{c1}/\gamma_n) = 0.01 < 1.00$ [8.2.1-(42)] Member stability check $\lambda_y = 30.44 < \lambda_{y,max} = 150.00$ $\lambda_z = 45.68 < \lambda_{z,max} = 150.00$ [10.4.1] $N/(F_{iey}*A*R_y*\gamma_{c2}/\gamma_n) = 0.25 < 1.00$ [9.2.2-(109)] $N/(F_{iez}*A*R_y*\gamma_{c2}/\gamma_n) + M_y/(c_y*d_y*W_y*R_y*\gamma_{c2}/\gamma_n) = 0.28 < 1.00$ [9.2.10-(120)]
12	Section check $sqrt(\sigma^2 + 3.0*\tau_{z,max}^2)*0.87/(R_y*\gamma_{c1}/\gamma_n) = 0.61 < 1.00$ [8.2.1-(44)]

	$\tau_{z,max} / (R_s * \gamma_{c1}/\gamma_n) = 0.02 < 1.00$ [8.2.1-(42)] Member stability check $\lambda_y = 30.44 < \lambda_{y,max} = 250.00$ $\lambda_z = 45.68 < \lambda_{z,max} = 250.00$ [10.4.2]

22.5.1 Capacity usage ratios

The diagrams below in Figures 50 and 51 show the bearing capacity which is utilized under the loading. From these ratios it can be seen that the results are close, but there are small dissimilarities which are caused by differences in safety factors and use of plastic and elastic capacity of steel.

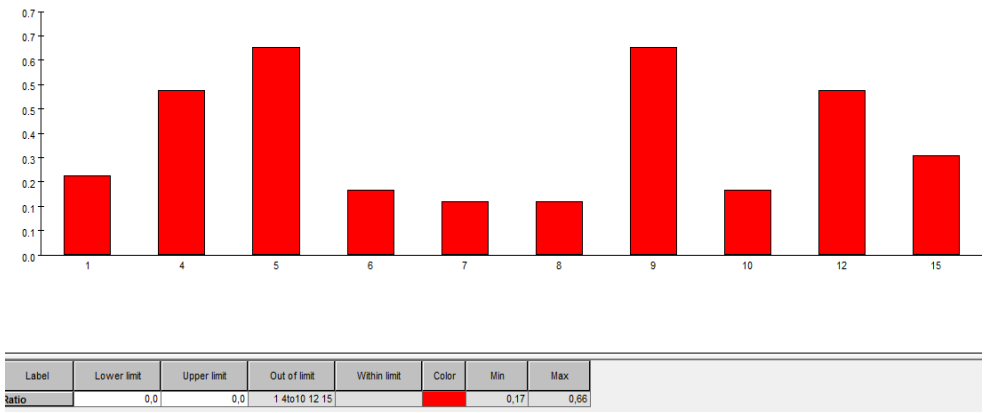

Figure 50 Capacity usage ratio, European standard

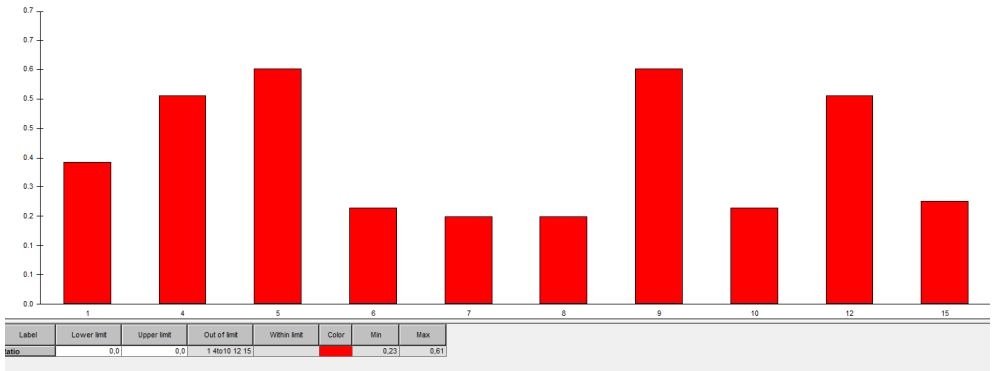

Figure 51 Capacity usage ratio, Russian standard

22.6 Results

In fact, Russian and European norms use a similar logic and theoretical basis but it can be pointed out that these standards use different methods.

Firstly, it is possible to perform plastic analysis using the European standard which is uncommon in Russia. Almost all formulas and requirements

are based on the elastic capacity of the material. Besides that, in the European standard there are appropriate requirements for a plastic analysis and it could be useful in some cases of the WQ-beam design.

Secondly, the next difference is the method of structural analysis. The Russian standard does not take into consideration global second order effects, but some analysis should be made for the local verifications.

Both standards apply the technique using the safety factors for load combinations and for resistance checks, but these values are not the same. Then, it must be mentioned that each country of the European Union has its own National Annex which defines safety factors values and rules, which is the next dissimilarity.

Eurocodes states the calculation method based on probabilistic methods and evaluation of reliability and risk class of the building. In Russia this kind of practice has just been started due to the increased requirements for the design of progressive collapse and for the purpose to create standards for the calculations of the buildings which are subjected to special and emergency impacts

The last thing is that the Russian methods and approaches require a fundamental knowledge of strength of materials and work experience, which will help to apply formulas. For a young designer it would be much easier to use Eurocodes due to clear algorithms and systematic methods.

23 CONCLUSIONS

The design according to a standard makes the analysis process easier and saves time of an engineer. Also, the expertise process becomes clearer. However after the comparison of both standards it can be concluded that design according to the Russian norms is more time consuming and requires competence and great knowledge in the engineering field. In Europe the analysis process is more precise; it has its own logic and algorithm. It will be easier for a young specialist to use the European standard instead of the Russian.

Besides that, nowadays the Russian standards are more understandable and readable for foreign engineers because of standard harmonization, which is focused on updating the Russian norms and it encourages specialists to keep abreast of new technologies.

Next, it is necessary to point out that WQ-truss system technology is a modern solution which has many advantages, which were described above. This system can ensure safety and can be highly applicable on the Russian market. The solution saves time and resists high loads, allows using big spans, which is the most important thing in building design.

Generally, European materials and new technologies are introduced in Russia and in order to use these achievements and in purpose to update the Russian normative basis it is vital to take part in the process of standard harmonization.

The topic of the thesis is important and in the future it is essential and interesting to perform researches about joint design of the WQ-truss and fire protection of this system. This thesis will help foreign designers to familiarize with the Russian standards and also will simplify the design of new solutions.

24 SOURCES

Kadak Jaak, Thesis, Effect of steel strength on the welded joint between a plate and two tubular cross-sections, 2014
https://aaltodoc.aalto.fi/handle/123456789/13489

Photos of WQ-truss in Lappeenranta
http://www.ruukki.com/News-and-events/News-archive/2014/Extension-to-IsoKristiina-Shopping-Centre-adds-to-shopping-space-in-Lappeenranta-Finland

WQ-beam manual
http://www.ruukki.com/Construction/Steel-frame-structures/WQ-beam-system

TRY STEEL STANDARD CARD No 21/2009

DO331: Ontelolaatan liitos WQ-palkkiin (keskipalkki)
http://www.elementtisuunnittelu.fi/fi/Haku?term=WQ

DTK201:WQ-palkin liitos betonipilariin PCs-konsoli
http://www.elementtisuunnittelu.fi/fi/Haku?term=WQ

Finnish shear tests on floors in 1990–2006

Information about harmonization of normative documents of the Russian Federation with foreign standards, including the European

R.S. Narayanan, A. Beeby, Designers' guide to EN1992-1-1 and EN1992-1-2, 2009

Wind suction
https://www.dlsweb.rmit.edu.au/toolbox/buildright/content/bcgbc4010a/01_loads_loading/01_primary_loads/page_006.htm

Darkov and Shapiro, Strength of materials, 1989

Design of steel structures, Luis Simoes da Silve, Rui Simoes, Helena Gervasio, 2010

European Erasmus Mundus Master Course, Conceptual Design of Buildings

Scheme
http://sections.arcelormittal.com/fileadmin/redaction/4-Library/4-SBE/EN/SSB03_Actions.pdf

RIL 201-1-20011

Steel Buildings - British Constructional Steelwork Association

Local buckling example
https://www.tue.nl/en/university/departments/built-environment/research/units/structural-design/research/completed-phd/local-buckling-of-slender-aluminium-sections-exposed-to-fire/

Principal stresses
http://emweb.unl.edu/NEGAHBAN/Em325/16-Mohr%27s-circle/Mohr%27s%20circle.htm

Shear buckling example
http://911research.wtc7.net/mirrors/guardian2/fire/SCI.htm

Shear buckling example
http://www.amirkari.com/SS22.aspx

Russian Standard: SP 20.13330.2011

Russian Standard: SP 16.13330.2011

Eurocodes 1993-1-1, 1993-1-8, 1991-1-1